2.4G WIRELESS RECORDING MICROPHONE

User's manual

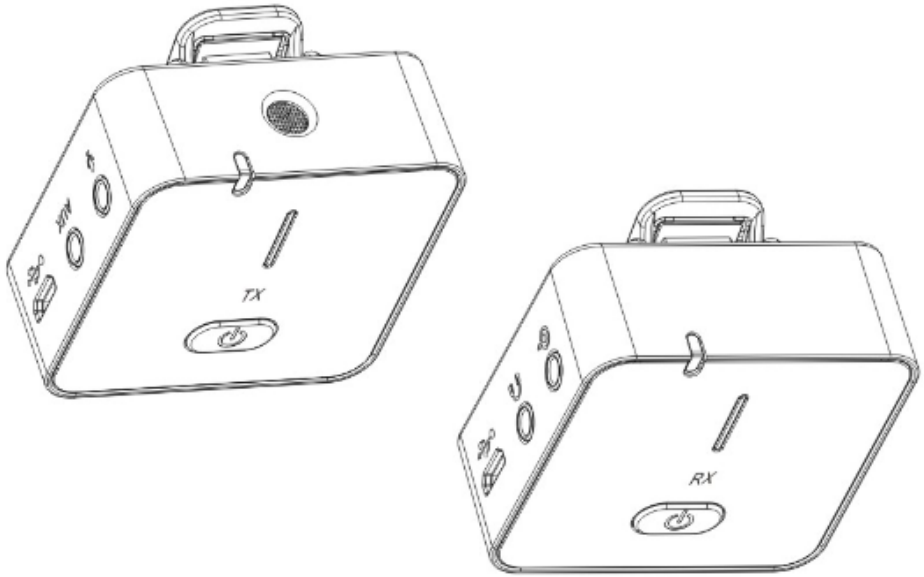

English

Transmitter Interface Description

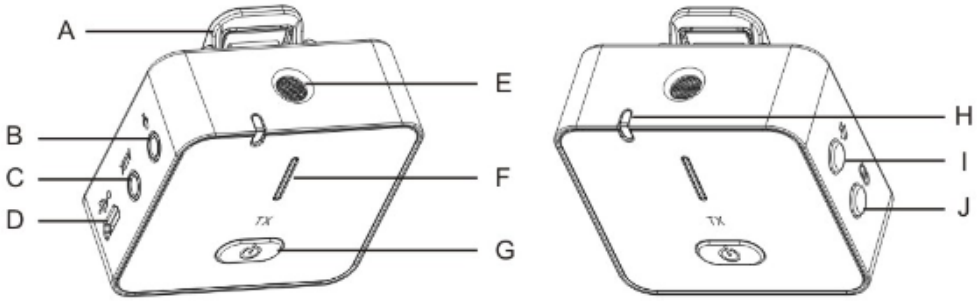

A: Fixing clip: can be quickly installed to the required fixed position.

B: External microphone socket: Insert the microphone into this socket and insert it in place.

C: External audio input interface: the audio signal can be input through the adapter.

D: TYPE-C charging interface.

E: Built-in microphone: the product supports recording with built-in microphones, or through external microphones.

F: Code matching indicator: The blue light flashes slowly when the transmitter and receiver are not matched, and the blue light is always on after the code is successfully matched.

G: Switch machine button:

#1: Turn on: Long press this button to turn on the product, and the button position will be green.

#2: Power off: Long press this button after power on, and the code indicator will flash blue quickly, which means the product has entered in the off state, you can release your finger.

H: Charging indicator/power indicator:

#1: The red light is always on in the charging state, and the green light is always on when the battery is full.

#2: This indicator does not light up in the normal voltage range of the product after starting up. When the battery power is low, the red light flashes slowly.

I: Mute button: The product is in the recording state. Press this button to enter the mute mode, and the receiver cannot output audio signals.

J: Code pairing button: After booting, press this button to enter the code pairing mode, and the blue light of the code pairing indicator will flash quickly.

Receiver Interface Description

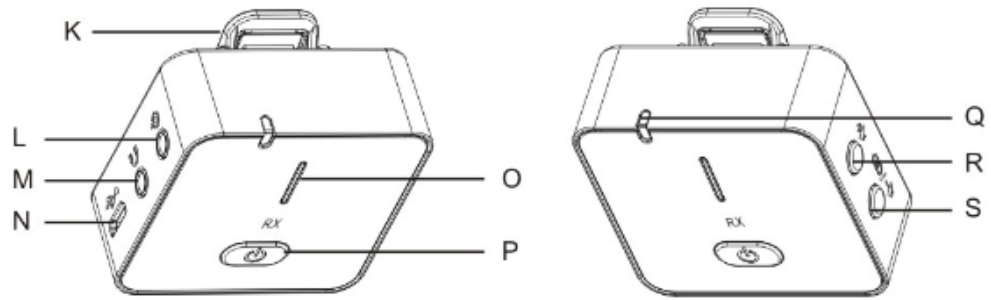

K: Fixing clip: can be quickly installed to the required fixed position.

L: Audio signal output port: The port output audio signal can be connected to a camera or mobile phone for recording.

M: Audio signal monitoring interface: you can insert headphones to monitor the sound quality of the recording in real time.

N: TYPE-C charging port.

O: Code matching indicator: The blue light flashes slowly when the transmitter and receiver are not matched, and the blue light is always on after the code is successfully matched.

P: Switch machine button:

#1: Turn on: Long press this button to turn on the product, and the button position will light up in green.

#2: Power off: Long press this button after power on, and the code indicator will flash blue quickly, which means the product has entered in the off state, you can release your finger.

Q: Charging indicator/power indicator:

#1: The red light is always on in the charging state, and the green light is always on when the battery is full.

#2: This indicator does not light up in the normal voltage range of the product after it is turned on. When the battery power is low, the red light flashes slowly.

R: Volume + button: product recording status, you can press this button to increase the volume of the recording.

S: Volume-button/code matching button:

#1: Volume reduction function: After the product is turned on, it enters the recording state, you can press this button to adjust the volume reduction of the recording.

#2: Code matching function: When the product is turned on, long press the volume "+""- "button to enter the code matching mode, and the code matching indicator blue light flashes quickly.

Technical Parameter

Microphone Sensitivity	-38±2dB	Delay Time	12.5ms
Microphone Directivity	Capacitive omnidirectional	Sampling Rate	48KHz*16bit
Working Voltage	3.3-5V	Signal to Noise Ratio	90db
Working Current	Max100mA	Distortion	0.5%@1KHz
Ambient Temperature	-15~65degrees	Dynamic Range	90db
Frequency Range	2.4-2.480GHz	Charging Current	400maH
Sending and Receiving Distance	≤50meters	Charging Time	about 2 hours
Transmitting Power	-10~18db	Working Time	about 5 hours
Receiving Sensitivity	-80db	Size	50*50*21mm
Frequency Response Range	20Hz-20KHz	Net Weight	Transmitter 40g/ Receiver 30g

Product Features

1. 2.400-2.480GHZ, GFSK modulation.
2. Support 3Mbps RF audio data transmission.
3. Support 48KHZ/16bit/single channel audio sampling.
4. The minimum audio delay is 12.5ms.
5. A wide range of applications: such as news interviews, film and television shooting, character interviews, program hosts, teaching training and other film and television recording, as well as connection to mobile phone recording.
6. With real-time return monitoring interface, you can connect headphones to monitor the recording effect.
7. Professional circuit structure, strong anti-noise interference ability.

8. The product has a built-in microphone and an external microphone port. The external microphone has a small collar holder, which can be easily and quickly fixed on the chest clothes, allowing users to use it more flexibly and conveniently.
9. The recording sound quality is clear and the sound quality is excellent, which brings users the ultimate recording experience.

Troubleshooting

Receiver no signal/noise	1. Power on and restart 2. Check whether the battery power is insufficient
Distorted voice when speaking loudly	Check whether the microphone head or external microphone cable is damaged
Silence / minimal sound	1. Check if the volume is adjusted to the minimum 2.Whether the microphone head or external microphone cable is damaged
Battery life is short	Check the battery capacity and replace the lithium battery
Wind noise	Check whether the microphone head or external microphone cable is damaged

Product Use Method Steps

1. The product factory package has already paired and connected the transmitter and receiver by default. If the product is not paired, please refer to the above (product interface description) method for pairing.
2. Insert the 3.5 audio 3P male external microphone into the external microphone socket, please refer to the above (product interface description) to find the correct position.
3. If you need the built-in microphone for recording, you don't need to connect an external microphone.
4. To find the location of the audio signal monitoring interface, please refer to (Product Interface Description) plug in headphones to monitor the sound quality of the recording in real time.
5. To find the location of the audio signal output interface, please refer to (Product Interface Description).
6. Insert the audio signal output interface into the 3.5 audio 3P male to 3.5 audio 3P elbow cable, which can be connected to the camera for recording.
7. Insert the audio signal output interface into the 3.5 audio 3P male to 3.5 audio 4P elbow cable, which can be connected to the phone for recording.

8. The recording transmitter can touch the mute button to enter the mute mode, and the receiving end cannot output audio signals. For the position of the button, please refer to (product interface description).
9. The output receiver can adjust the volume of the output terminal through the volume +- button. For the position of the button, please refer to (product interface description).
10. Find the external audio input interface. The product supports external audio input. For the interface, please refer to (Product Interface Description) to find the correct location. The audio signal can be input through the 3.5 audio 3P male to 3.5 audio 3P elbow cable adapter, and the receiver synchronously outputs the audio signal of the audio input.

Microphone Pointing Diagram

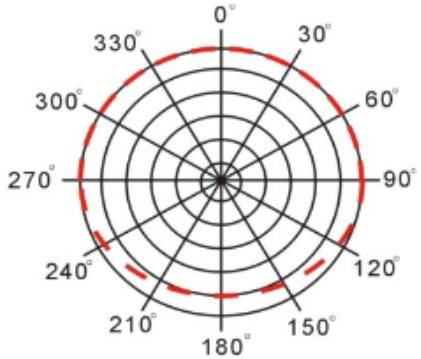

Frequency Response Graph

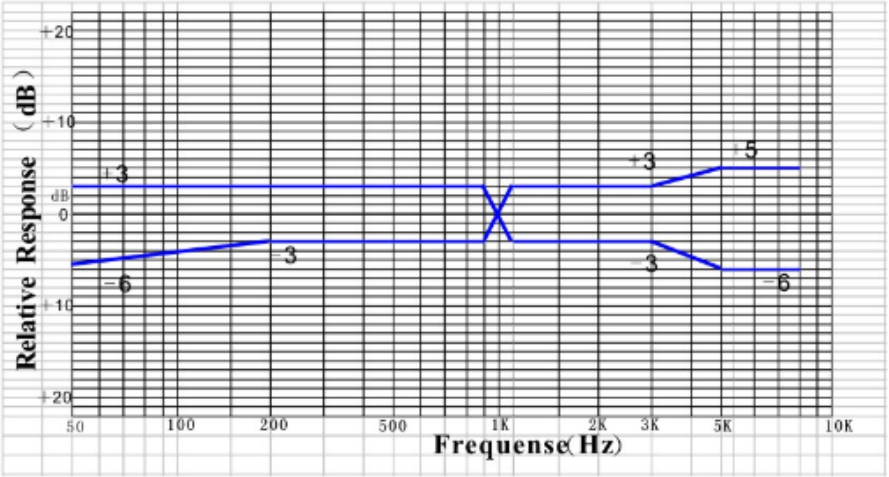

Matters Needing Attention

1: This product is a precision electronic device. Avoid rain or heavy falls. If water enters accidentally, please hand it over to professional technicians.

2: Please turn off the product when it is not used for a long time.

3: It should be stored in a dry and clean place. Avoid storage or use in places with high temperature, high humidity and strong magnetic fields.

4: Do not use this product while charging.

5: The transmission distance is affected by the interference intensity: 50 meters without interference, and about 15 meters with strong interference or obstruction.

Product Factory List Configuration

1: Transmitter *1PCS

2: Receiver *1PCS

3: 3.5 audio 3P male to 3.5 audio 3P elbow line *1PCS

4: 3.5 audio 3P male to 3.5 audio 4P elbow line *1PCS

5: 3.5 audio 3P male head microphone *1PCS

6: TYPE-C Cable *1PCS

7: Product manual *1PCS

This device complies with Part 15 of the FCC Rules. Operation is subject to the following two conditions: (1) this device may not cause harmful interference, and (2) this device must accept any interference received, including interference that may cause undesired operation

NOTE: This equipment has been tested and found to comply with the limits for a Class B digital device, pursuant to Part 15 of the FCC Rules. These limits are designed to provide reasonable protection against harmful interference in a residential installation. This equipment generates, uses and can radiate radio frequency energy and, if not installed and used in accordance with the instructions, may cause harmful interference to radio communications. However, there is no guarantee that interference will not occur in a particular installation.
If this equipment does cause harmful interference to radio or television reception, which can be determined by turning the equipment off and on, the user is encouraged to try to correct the interference by one or more of the following measures:
-- Reorient or relocate the receiving antenna.
-- Increase the separation between the equipment and receiver.
-- Connect the equipment into an outlet on a circuit different from that to which the receiver is connected.
-- Consult the dealer or an experienced radio/TV technician for help.

Warning: changes or modifications not expressly approved by the party responsible for compliance could void the user's authority to operate the equipment