LONGER

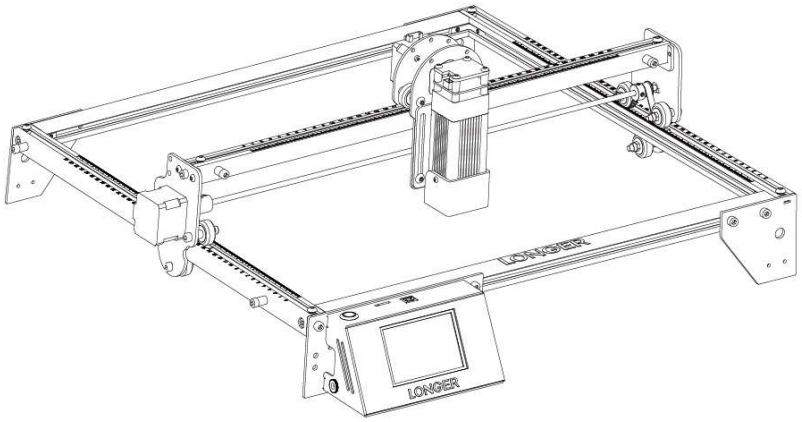

RAY5 Laser Engraver

User Manual

LONGER TECHNOLOGY

Version 1.0

Dear customer,

Thank you for choosing Longer products **RAY5**.

Maybe you are familiar with the engraving machine or have bought a similar engraving machine before, we still highly recommend that you read this manual carefully. The installation techniques and precautions in this manual can help you avoid any unnecessary damage or frustraion.

More information please refer to:

1. Please contact us via email (support@longer3d.com).
2. Facebook page and Youtube channel as shown below.

Facebook : Longer Laser Engraver Official Group

Youtube: https://www.youtube.com/c/Longer3D/featured

Contents

Safety Precautions **2**
A. Product information **9**
(1) Model parameter 9
(2) Packing List 11
(3) Machine assembly 12
(4) Leveling 13
(5) Installation of the filament 14
B. Machine operation **15**
(1)Machine control interface description 20
C. Installation and use of Cura 4.8 slicing software **26**
(1) Software installation 26
(2)Add 3D model into Cura 4.8 27
(3)Slicing parameters 27
(4)Slice and save Gcode files 27
(5)More 27
D. FAQ manual **27**
Question1: How to update the firmware? 27
Question 2:What if the filament does not discharge from the machine? 28
Question 3: 29
When the machine returns the filament, it can't be returned. What should I do when stuck in the pneumatic joint? 29
Question 4: What should I do if I cannot resume printing after power shutdown? 30
Question 5: 31
The left side of the platform can be leveled, but the right side cannot be leveled. 31
Question6: 32
Filament does not stick to the platform 32
Question7: 33
Print online encounters no content on the right side. 33
Question8: 34
The touch screen displays the file name garbled. 34

Safety Precautions

1)The RAY5 engraves and cuts materials by the means of a high-energy diode laser beam.

The hazards associated with a high-energy diode laser beam include the possibility of fires, generation of hazardous and/or irritating toxic fumes, but more importantly damage to eyes and skin.

2) Laser engravers are divided into several internationally valid classes based on their performance and the risk of injury.The RAY5 falls into the Class IV (Class 4 IEC standard focus on the American FDA classification).

Laser class	Class Definition
Class I	Class I laser radiation is not considered hazardous.
Class IIa	Class IIa laser radiation is not considered hazardous if viewed for any period of time less than or equal to 1x103 seconds, but is considered a chronic viewing hazard for any period of time greater than 1x103 seconds.
Class IIa	Class II laser radiation is considered a chronic viewing hazard.
Class II	Class IIIa laser radiation is, depending upon the irradiance, either an acute in- trabeam viewing hazard or chronic viewing hazard. If viewed directly with optical instruments, Class IIIa laser radiation is classified as an acute viewing hazard.
Class IIIb	Direct Class IIIb laser radiation is considered an acute hazard to the

	skin and eyes.
Class IV	Class IV laser radiation is considered an acute hazard to the skin and eyes from both direct and scattered radiation.

The high energy laser beam can cause severe eye damage, including blindness and serious skin burns. Improper use of the controls and modification of the safety features may cause serious eye injury and burns.

Please wear Personal Protective(Safety Glasses are designed to filter specific ranges of laser wavelength. The RAY5 Safety Glasses provided are specific for LONGER Laser Module;) when using the machine Equipment (PPE).

DO NOT look directly into the laser beam;

- DO NOT aim the laser beam at reflective surfaces;
- DO NOT operate the laser without PPE protection for all persons nearby in the proximity of the RAY5
- DO NOT allow unsupervised access to the RAY5 to children;
- DO NOT allow access near the RAY5 to pets;
- DO NOT modify or disable any safety features of the laser system;
- DO NOT touch the high energy laser beam;

3) We strongly recommend placing the machine in a well-ventilated room, and at the same time, the door of the room has a sealing effect and the windows have curtains, so as to effectively avoid looking directly at the laser beam and some smoke and steam , Particles and other highly toxic substances. At the same time, you can pay attention to the Longer products (cover) in the follow-up.

4) The high-energy diode laser beam can produce extremely high temperatures and significant amounts of heat as the substrate material is burned away while engraving and cutting. Some materials are prone to catch fire during cutting operations creating
flame, fumes and smoke.

Although the RAY5 has a built in flame sensor, this technology should NOT be considered 100% accurate and should be seen only as a warning system.

P.S. During the working process of RAY5, if a flame is found, the machine will stop the laser and make a sound to indicate abnormal conditions. Please pay attention to the working status of the machine.

6) during operation to ensure that any flare ups/ flame are properly contained and
extinguished.

It is strongly recommended that a Fire Extinguisher should be located within
close proximity to the RAY5. Extinguishers should be halogen or multi-purpose dry chemical. Alternatively or in conjunction with the Fire Extinguisher it is recommended a “Fire Extinguisher Ball” is positioned beside the RAY5.

- DO NOT use materials that are highly flammable, explosive or produce toxic
by-products;
- DO NOT remove material from the cutting bed before it has cooled;
- DO NOT leave the RAY5 operating unattended;
- ALWAYS clean up clutter, debris and flammable materials in the laser RAY5 bed after use;
- ALWAYS keep a properly maintained fire extinguisher nearby;
- DO NOT allow the USB cable to come in contact with the laser Beam;
- DO NOT allow the 12v power cable to come in contact with the laser Beam;

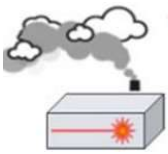

7) During the engraving process of the RAY5 laser engraving machine, different materials may produce different pungent odors. Always use RAY5 laser engravers in open and well-ventilated areas.

8) Environmental requirements

Temperature requirement: 10° C~30° C, humidity requirement: 20%~50%, this RAY5 laser engravers can work normally within this range; beyond this range, this laser engravers will unable to achieve the best engraving results.

9) Below a list of some of the most known hazardous materials that the user SHOULD NOT attempt to engrave or cut on. If a material is not in this list, do not consider it to be safe to use. Obtain the Safety Data Sheet (SDS) from the material's manufacturer when handling unknown materials.

Material	**Reason to avoid engraving / cutting it**
PVC (Poly Vinyl Chloride)	PVC will emit Chlorine gas when laser cut or laser engraved. This toxic gas can ruin the optics and motion control system of the laser engraver, In fact, engravingor cutting PVC is a sure way of voiding the warranty of your laser engraver
Lexan / Thick Poly-carbonate	Lexan not only cuts poorly but it also catches on fire very easily. The window of the laser engraving machine is usually made from polycarbonate because it doesa very good job of attracting infrared radiation., which is the frequency of light theengraver uses when cutting and engraving materials. This makes the laser cutterquite ineffective in cutting polycarbonate materials

ABS	ABS melts upon exposure to a laser beam as opposed to vaporizing which would be the ideal reaction needed for laser engraving. Instead of leaving a crisp image,ABS will melt and leave a gooey deposit on the surface.
HDPE	HDPE melts and catches on fire pretty easily upon exposure to a laser beam.
Polystyrene Foam	Only very thin pieces can be laser cut but for the most part, polystyrene catches on fire and melts when exposed to a laser beam
Fiberglass	Fiberglass is made from two materials; glass and epoxy resin. The best method of marking glass is etching while epoxy resin can emit toxic fumes upon laser engraving. These two reasons make fiberglass a bad choice for a laser engravingmaterial
Polypropylene	polypropylene melts and catches on fire easily and then the melted material con-tinues to burn thereby forming pebble-like drips that harden on the surface
Coated Carbon Fiber	Coated carbon fiber emits noxious fumes. Additionally, carbon fiber can be cut albeit with some fraying but this is not the case when it is coated.

10) The RAY5 has built in technology and algorithms to keep its users and the surrounding environment safe. This said its important to understand the RAY5 is not a toy and should be operated with care and respect.

11) Important information regarding your RAY5

12v power system:

- Never Use a different voltage Power Adapter. The RAY5

requires 12v 5 Amps;

- When using an alternative Power Adapter, the Voltage should always be 12v, the minimum Amperage output should be 5 Amps. Higher amperage output Power Adapter can be used without risk of damage to your RAY5;

- On inserting the power barrel into your Motherboard it is possible that a small spark is visible. This is NOT hazardous to your machine and is caused by the 12v power inrush. If you prefer to avoid this, connect the power barrel to your motherboard first, then connect your power adapter to the mains electricity plug;

- Once the RAY5 detects 12v present you will see the motherboard emit a light red glow on the LED of the Motherboard. This mean the your motherboard is powered.

- If when plugging your Power Adapter barrel to your Motherboard and the Power adapter to mains power a Blue LED does not turn on, please verify your power adapter is receiving Mains Power.

A. Product information

(1) Model parameter

Machine Parameter	
Item Number	RAY5
Working Area	400x400 mm (15.75x15.75 In)
Z-Height Clearance	65mm
Min Engraving Speed	40 mm/min
Max Engraving Speed	10000 mm/min
Power Adapter Input Voltage (AC)	100-240v 50-60Hz Single Fase
Power Adapter Output Voltage (DC)	12V 5A
Power Consumption	60W
Packaging Size	61 x 30.5 x 14 cm
Packaging Weight	4.70Kg
Machine Size Assembled	61 x 67 x 20cm (24.01x26.38x0.79inch)
Operating Temperature	-20ºC - 50ºC
Laser Parameter	
Laser Technology	Diode Laser
Wavelength	455nm
Power Input	12V 3A
Optical Output (W)	5W - Item Number is: RAY5 10W - Item Number is: RAY10
Focus Type	Fixed Focus - 30mm Focal Range
Dot Size at optimal Focus	0.08x0.15mm
Laser Class	FDA Class IV; Class 4 IEC standard

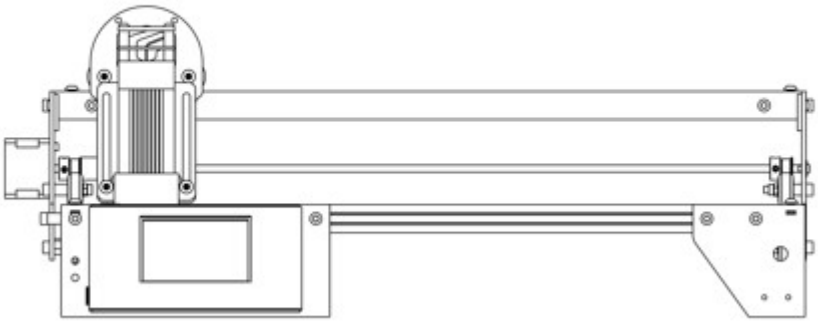

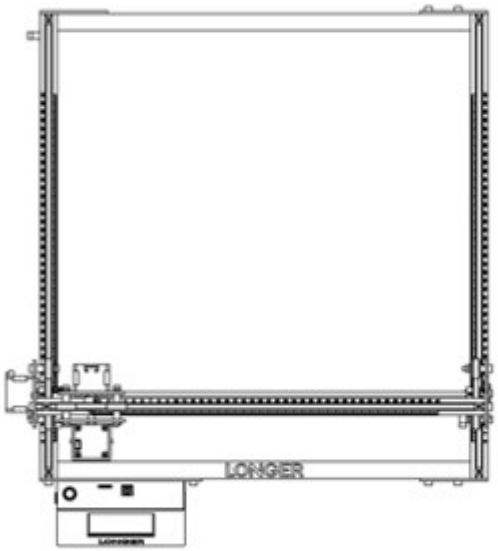
LONGER

(2) Packing List

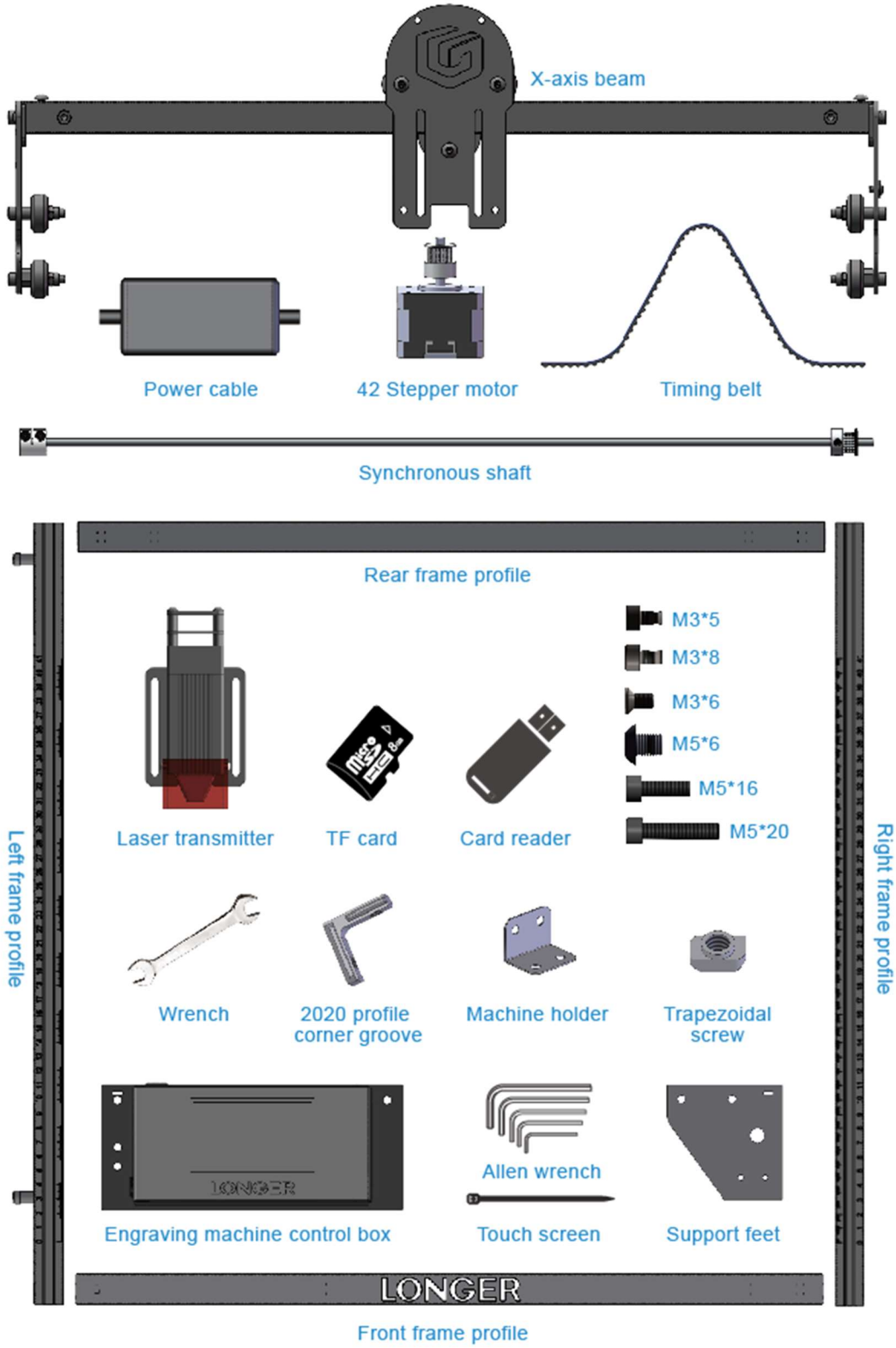

(3) Machine assembly

LASER MACHINE INTRODUCTION

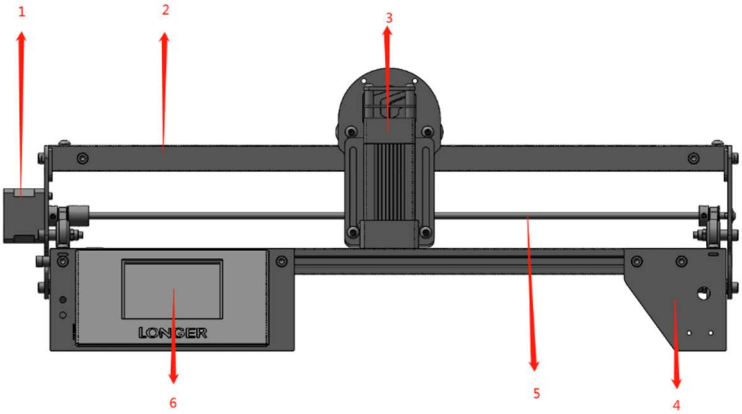

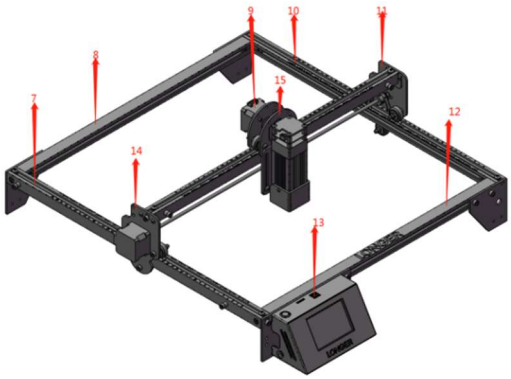

1. Y-axis motor 2.X-axis beam 3.Laser transmitter 4.Leg sheet metal

5. Synchronized optical axis 6.touch screen 7.Left frame profile 8.Rear frame profile

9. X-axis motor 10.Right frame profile 11..X-axis right sheet metal

10.Front frame profile 13.Motherboard 14.X-axis l

1. Preparation: X-axis beam, synchronous shaft, 42 stepper motor\, M3 spring washer, M3x8 screw x4.

1.1Install the motor on the sheet metal on the right side of the beam as shown in the figure, connect the motor shaft with the synchronous shaft, and tighten the coupling screws.

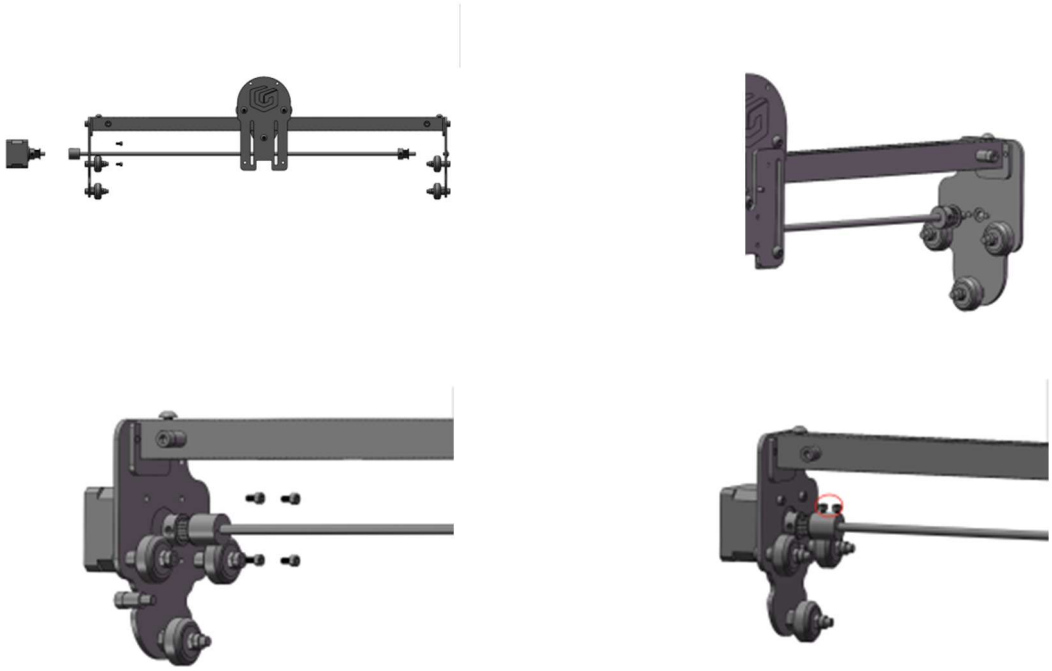

2. Preparation: frame profile, corner groove, hexagon socket head screw M5X20x4, M5 spring cushion x4.

2.1First put the foot groove in the frame profile, use the inner hexagonal cup head to assemble and fix the frame profile. After the frame is installed, tighten the M5 machine screw on the foot groove. During the process, hold down the profile by hand to prevent the frame from warping.

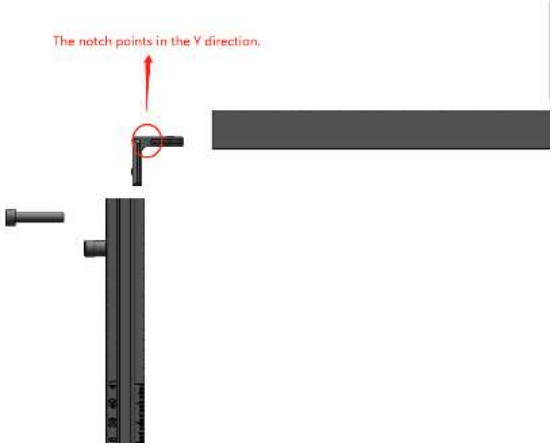

3. Preparation: X-axis beam, and the frame to complete the assembly.

3.1Install the X-axis beam in the V-groove of the left and right profiles along the direction of the arrow.

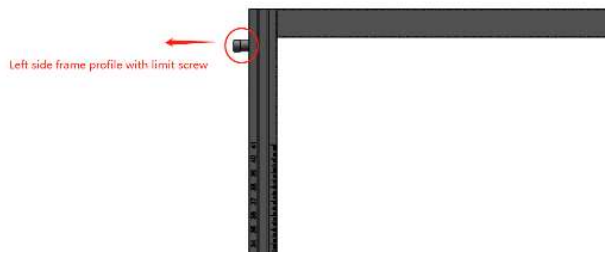

3.2Pay attention to adjusting the eccentric nut to prevent the roller from

being damaged by the groove.

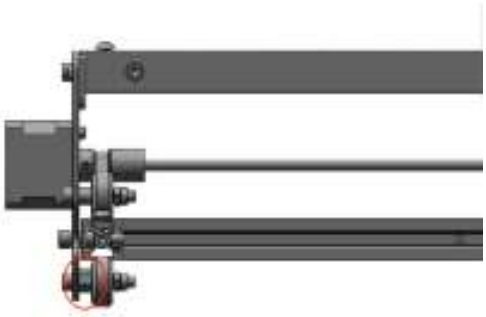

4. Preparation: Support feet x3, engraving machine control box, M5x20 hexagon socket cup head screw x1, M5x16 hexagon socket cup head screw x7, M5x8 hexagon socket round head screw x1, M5 spring washer x8, nylon isolation column (7*5* 6) x1.

4.1According to the figure, install the supporting foot, the control box of the engraving machine, and the left profile limit screw in the corresponding position.

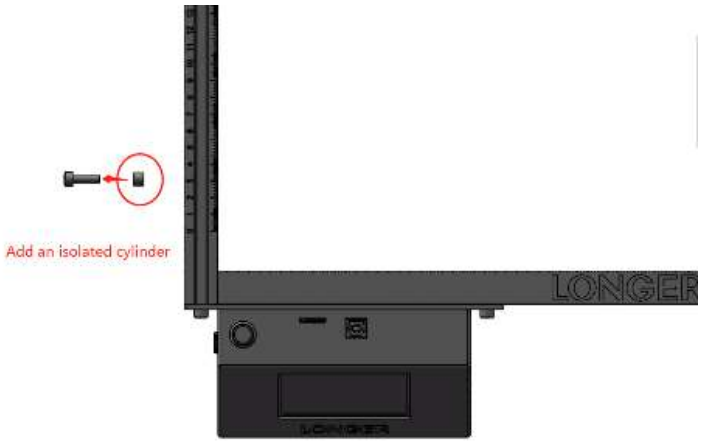

5. Preparation: timing belt x2, M5 trapezoidal nut x4, M5x6 hexagon socket head screw x4.

5.1As shown in the figure, pass the timing belt through the roller and the timing wheel, and use the square nut to fix the timing belt.The installation method on the other side is the same.

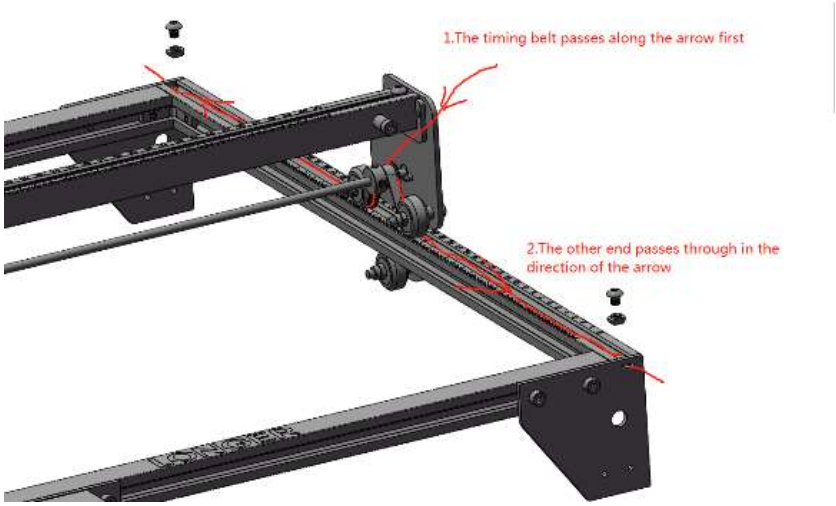

Note: Do not obstruct the movement stroke of the engraving machine with the round head screws

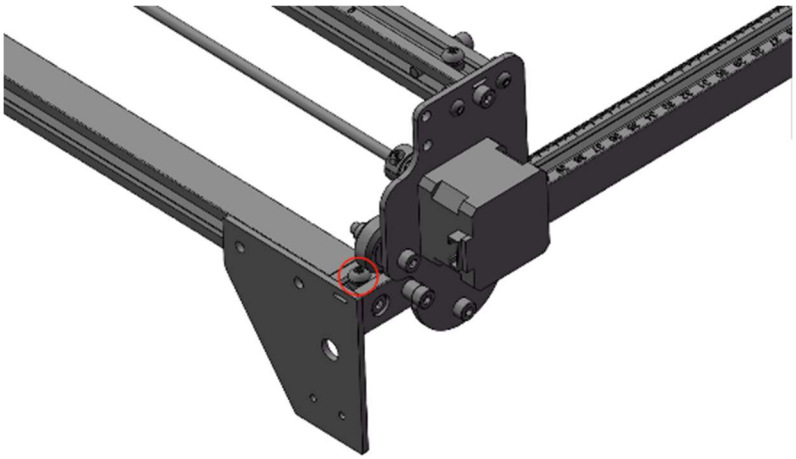

6. Preparation: laser head, M5x8 hexagon socket round head screw x2, M3x6

hexagon socket round head screw x2, nylon isolation column (5x3x3) x2;

6.1Use M5x8 round head screws to fix the laser head to the X-axis beam laser head sheet metal, and the height of the laser head should not be too high;

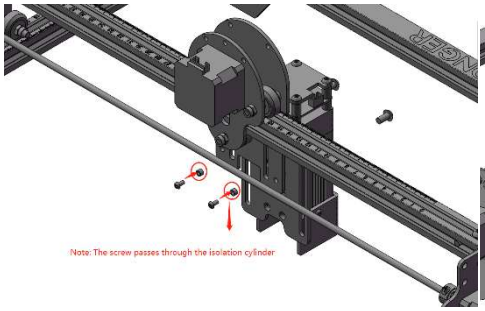

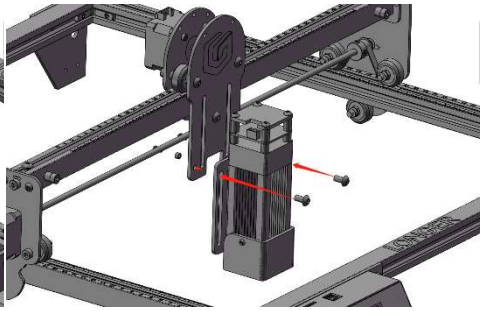

7. Connect the cable to the motor and the laser head as shown in the figure.

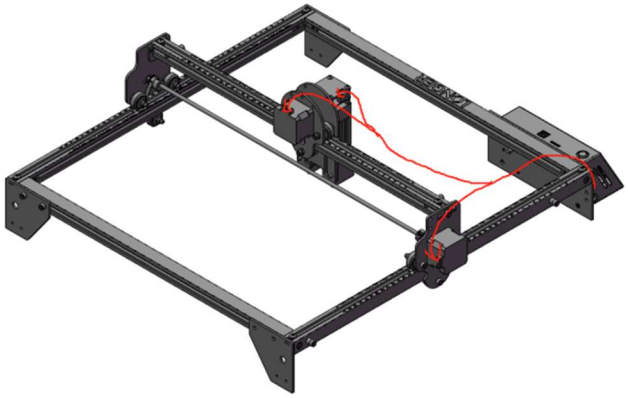

Note: Fix the cable with a cable tie and sheet metal to ensure that the cable has enough length to ensure that the length of the cable is sufficient for the laser head to move to the limit position.

Lightburn

Step1. Software installation steps

1. Please download the trial version of Lightburn from the following website: https://lightburnsoftware.com/pages/trial-version-try-before-you-buy
2. Install the software on your computer and run it.
3. Start the application from your computer (Windows, MAC, Linux).
4. If this is the first time you have started LightBurn, you will be prompted to enter the new device wizard.
5. Select GRBL and press the Next button.

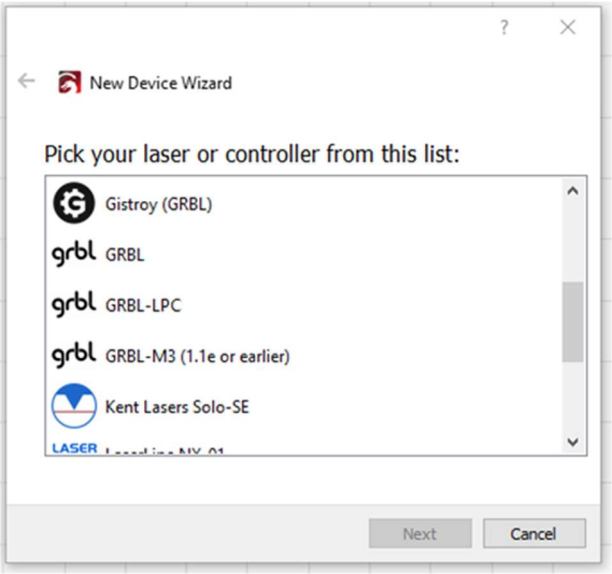

6. Select Serial/USB, and then press Next.

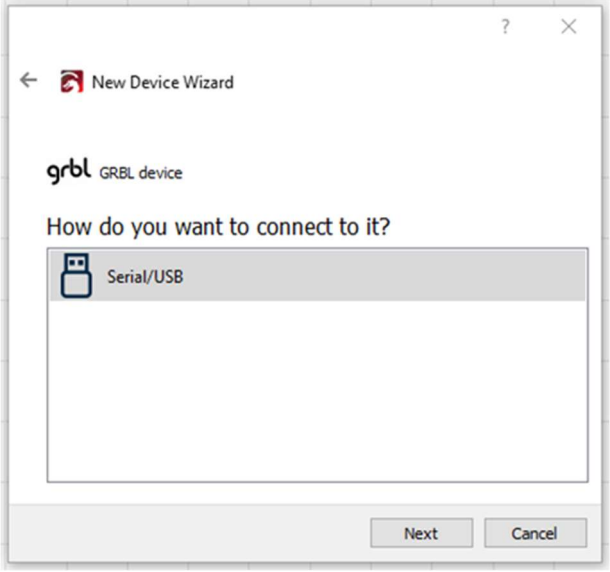

7. Enter your device name and X-axis and Y-axis travel, and then press Enter to confirm.
Equipment name: RAY5
X-axis travel is 400mm
Y-axis stroke is 400mm
8. Select Front Left as your origin X, Y and activate Auto “Home”, then press Next.

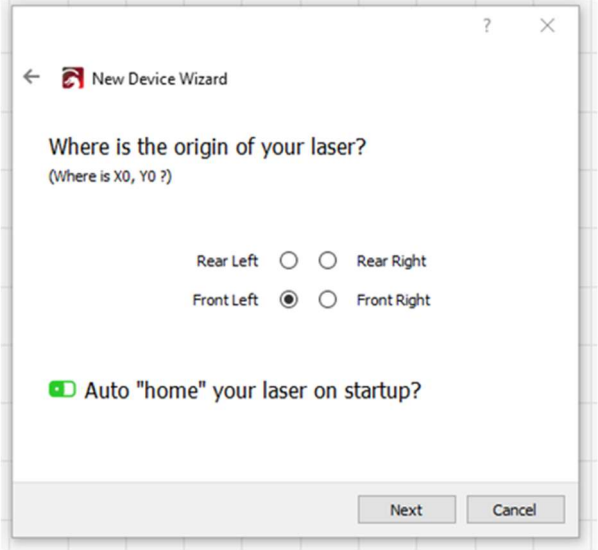

9. Select RAY5, and then press Set as default.
10. Your RAY5 is ready to be used in LightBurn software.
PS. If you think the trial version is good, you can buy it for a fee.

Step2. User guide

Connect the serial port line to the engraving machine and the computer respectively, and find the serial port number driven by the USB converter in the device manager(COM4)；

Correspondingly select (COM4) on the serial port, and the engraving machine is connected to the computer software at this time

You can complete the selection of engraving/cutting graphics by ①**importing computer pictures or files/②making graphics on the drawings.**

①When importing computer pictures or files, affected by the file format, change the supported format to "all supported items" to find the imported content.

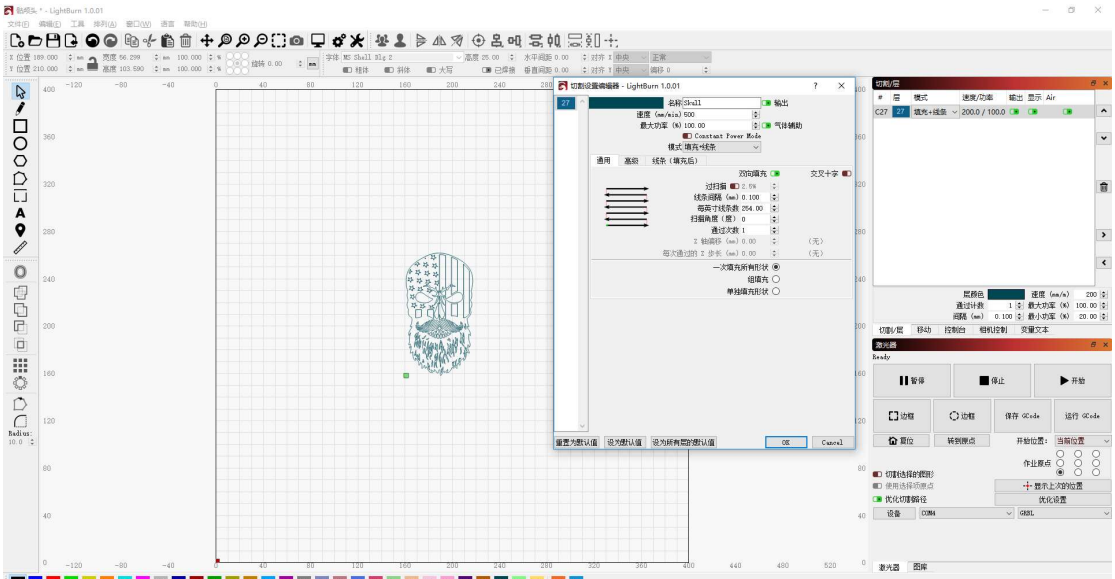

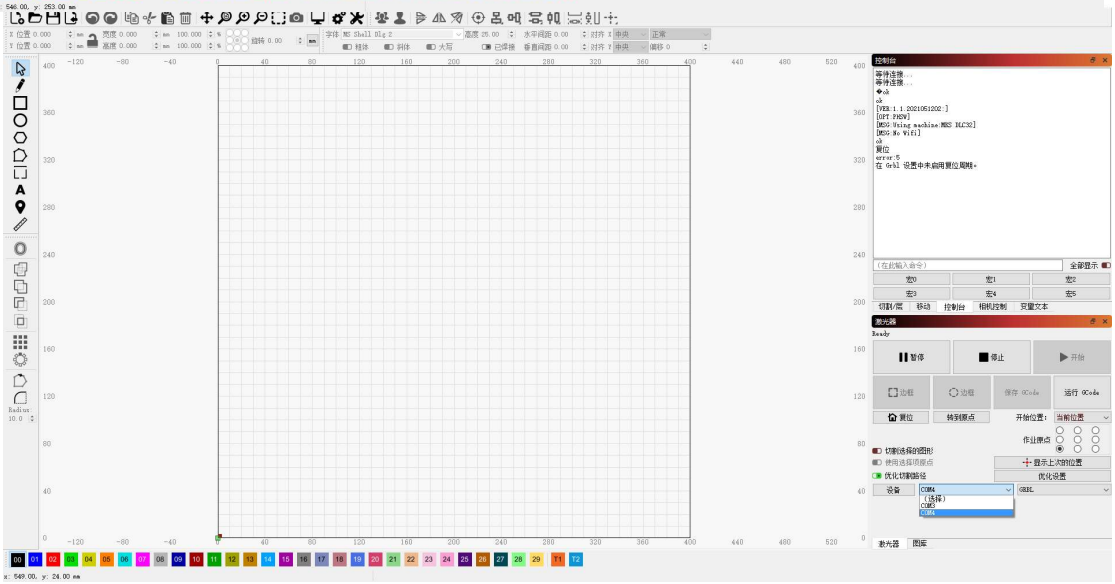

②Make graphics on the drawing, you can use the graphics editing function on the left to make any pattern on the drawing

Step3. After loading the graphics, set the name, speed, maximum power, mode and other parameters in the cutting/layer; (**engraving function and cutting function are only different in speed, power parameter selection and focusing, and the cutting speed parameter is slower**)

Take the current graph as an example. The green point in the lower left corner of the graph is the origin of the laser (the current position is the original position where the laser starts to work). After placing the sheet under the laser, click "Border" to make the laser go through the outline of the picture to ensure the picture It can completely cover the inside of the board.

Click "start", the laser starts to work. The picture below shows the actual engraving effect of mirror stainless steel.

LaserGRBL

1.Please download the Host Control Software ”LaserGrbl” and the Drivers at:
https://github.com/arkypita/LaserGRBL/releases

2. After installing laserGRBL,Please plug the cable of power adapter into the Power Adapter Interface, press the Power Switch button, and connect the laser engraver and computer via USB

cable.

3. Advanced Settings Introduction

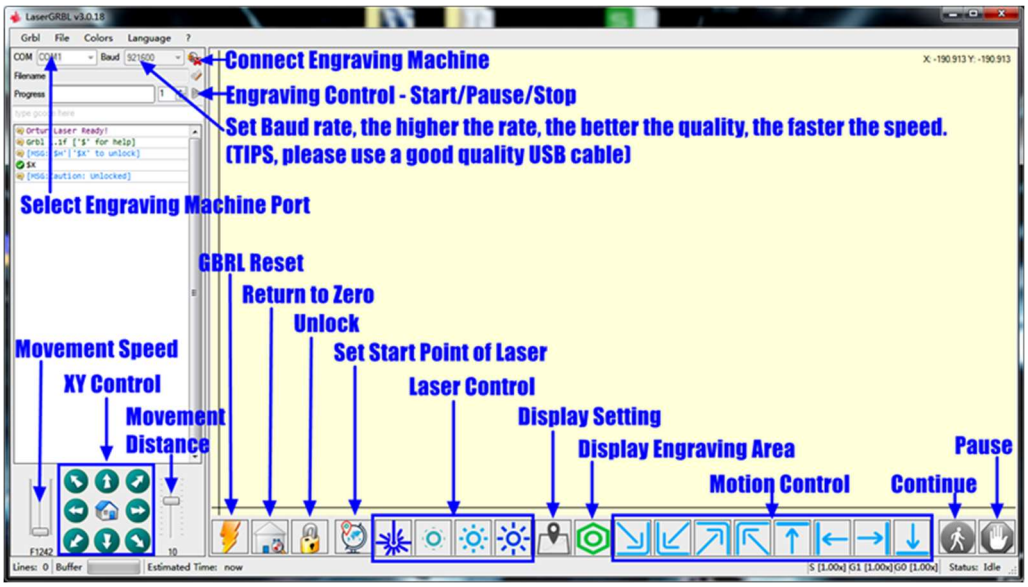

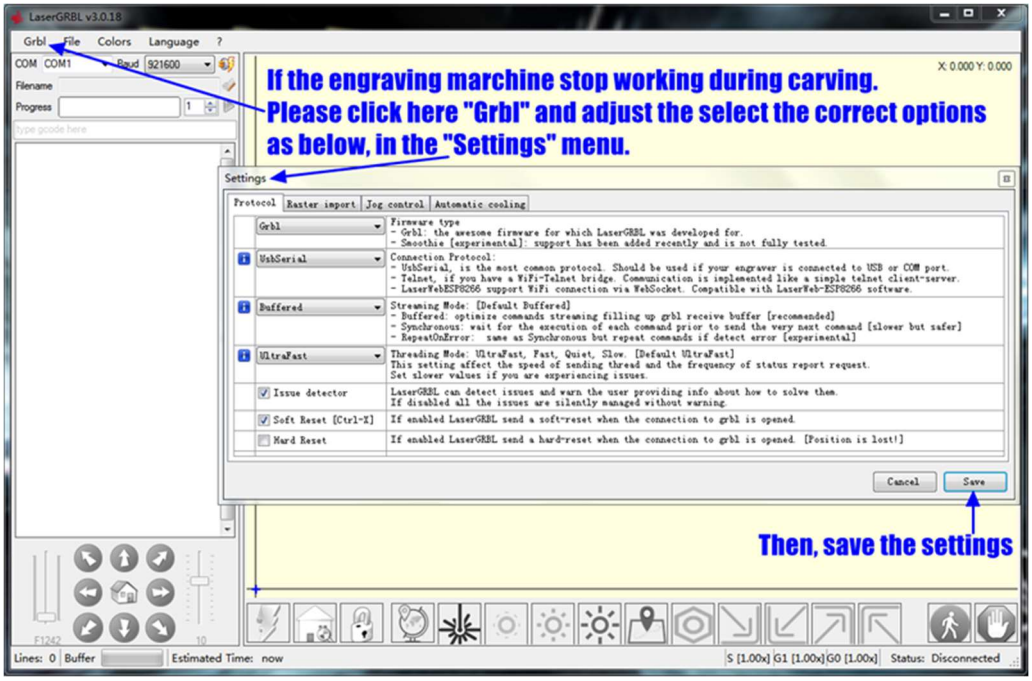

4. Setting Procedure

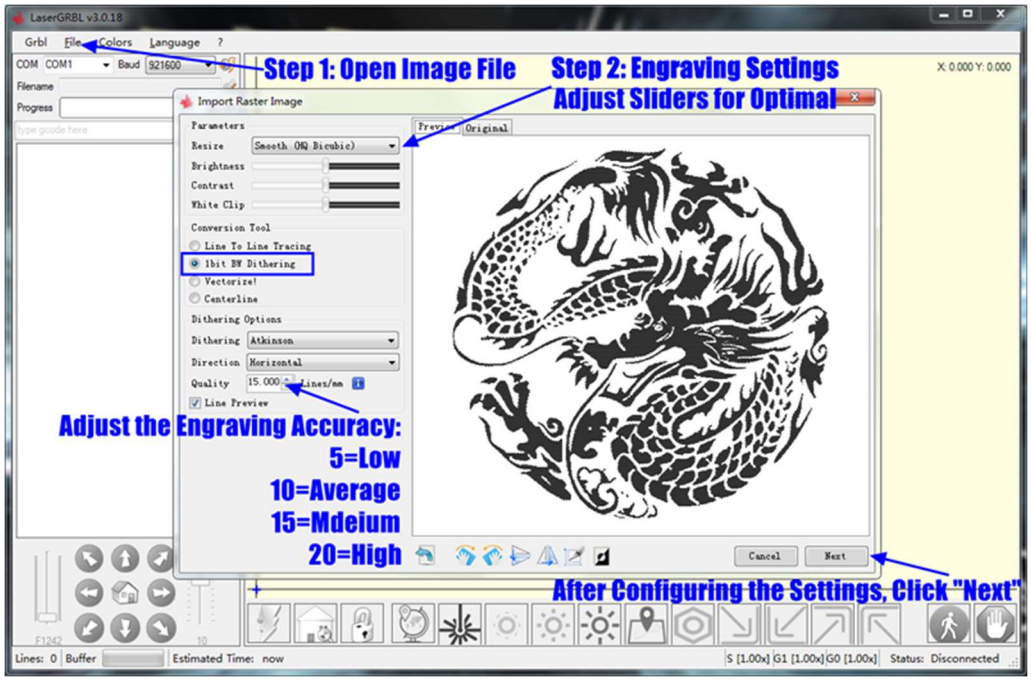

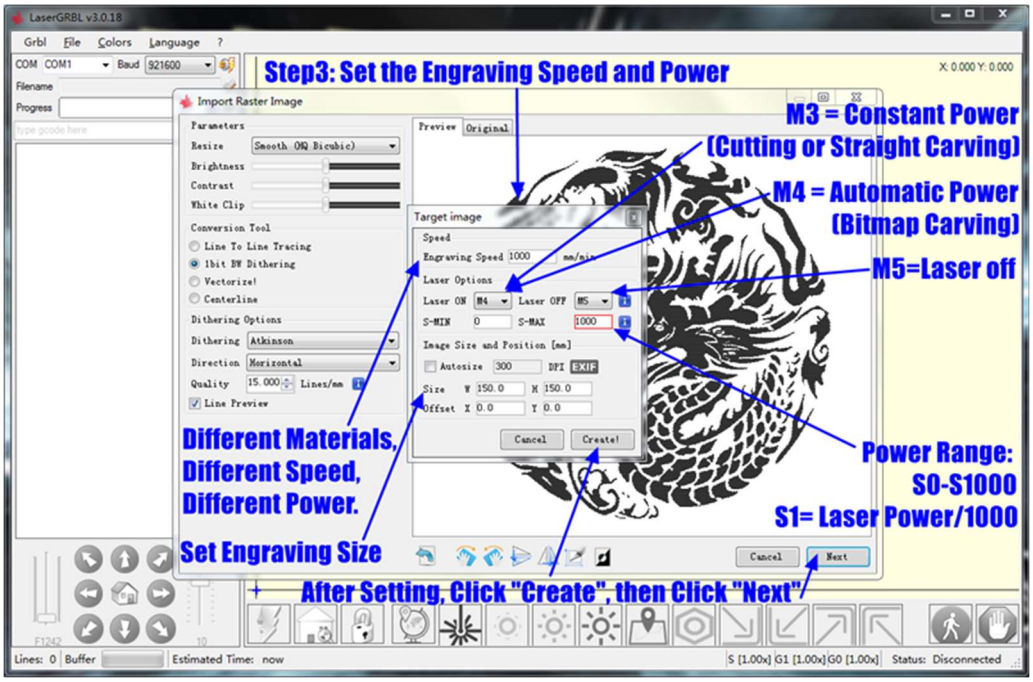

5. Please start the engraving. For your information:

1st Please click this icon, to home X、Y axis.

2nd Please click these icons, to move the laser unit to be the correct position you want.

3rd Please click this icon, to set up the current position as the starting point of the engraving.

4thPlease click this icon to start engraving.

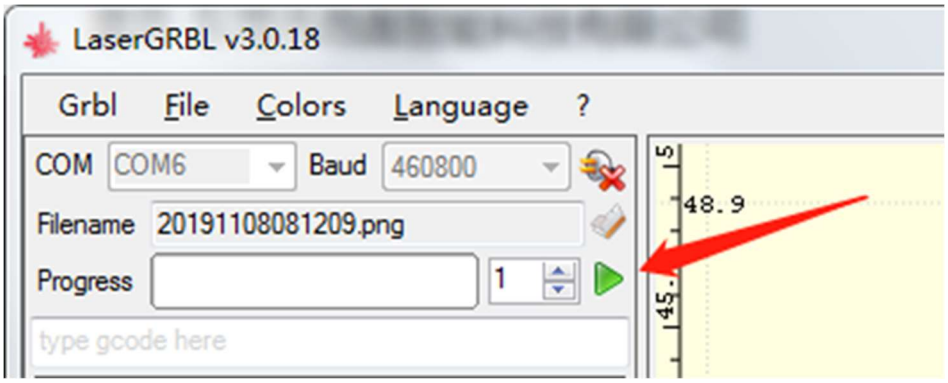

Touch screen

1. Start interface after power-on

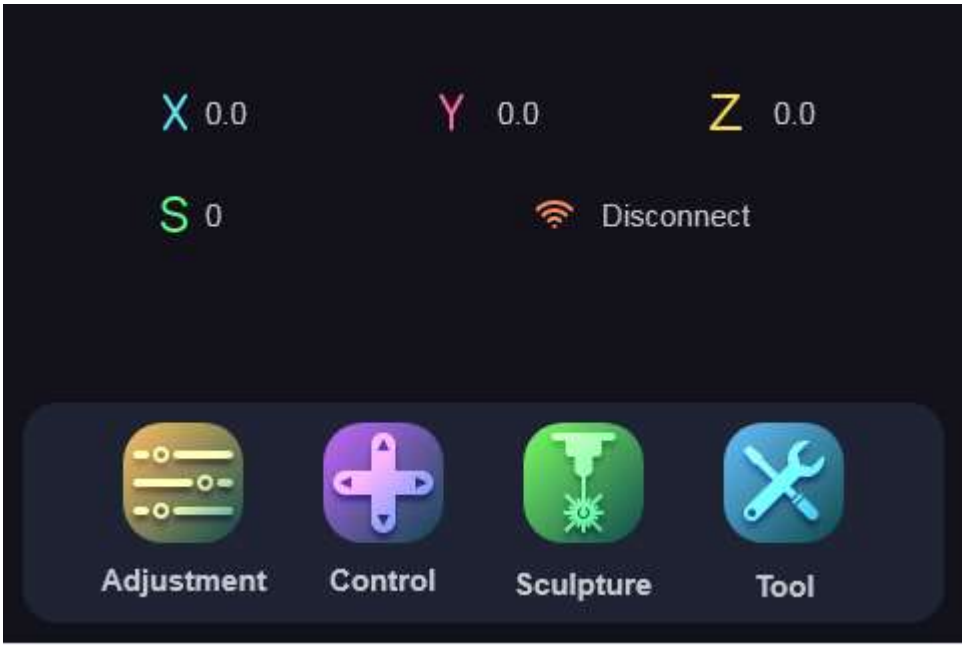

2. Test to light up the laser

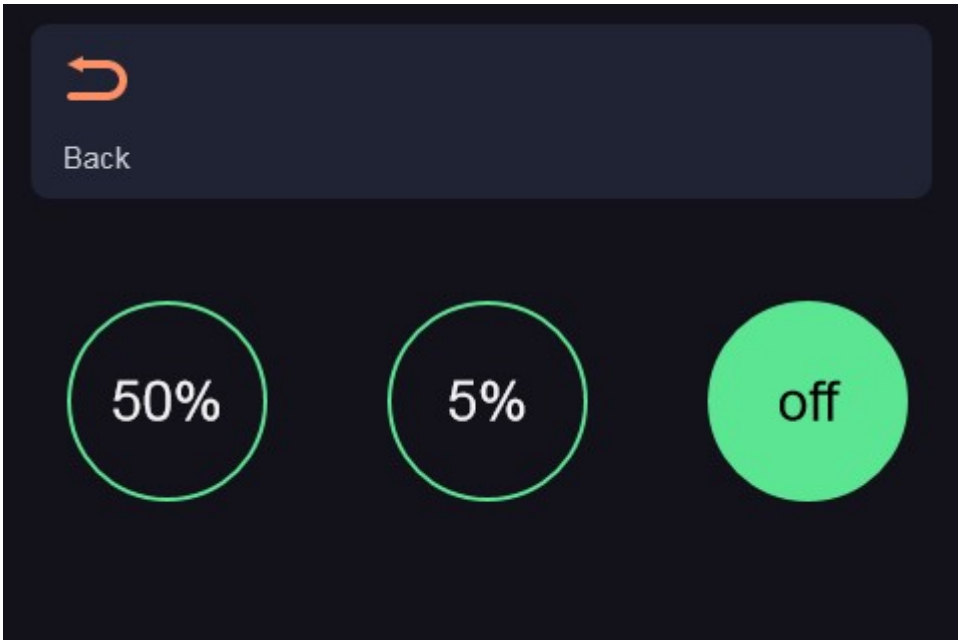

3. Control interface

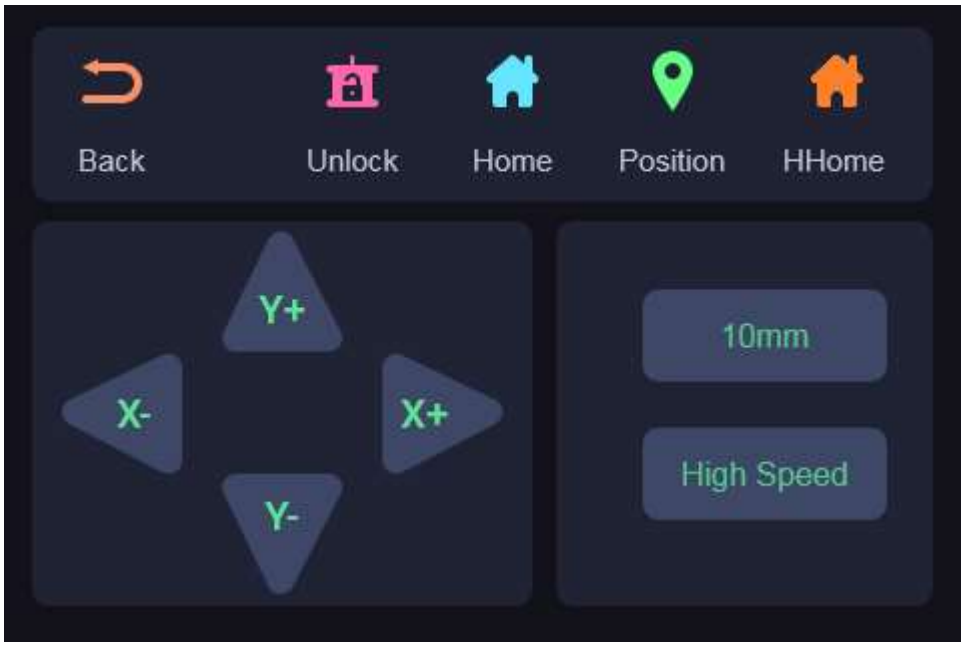

4. Read SD card file interface

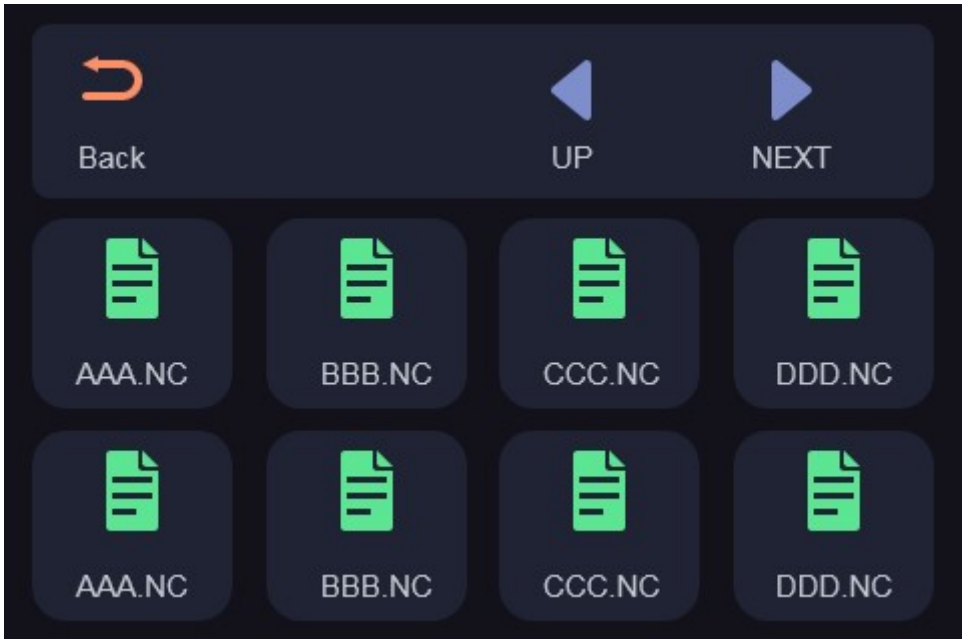

5. Go to the border and start carving the interface

6. Start carving interface

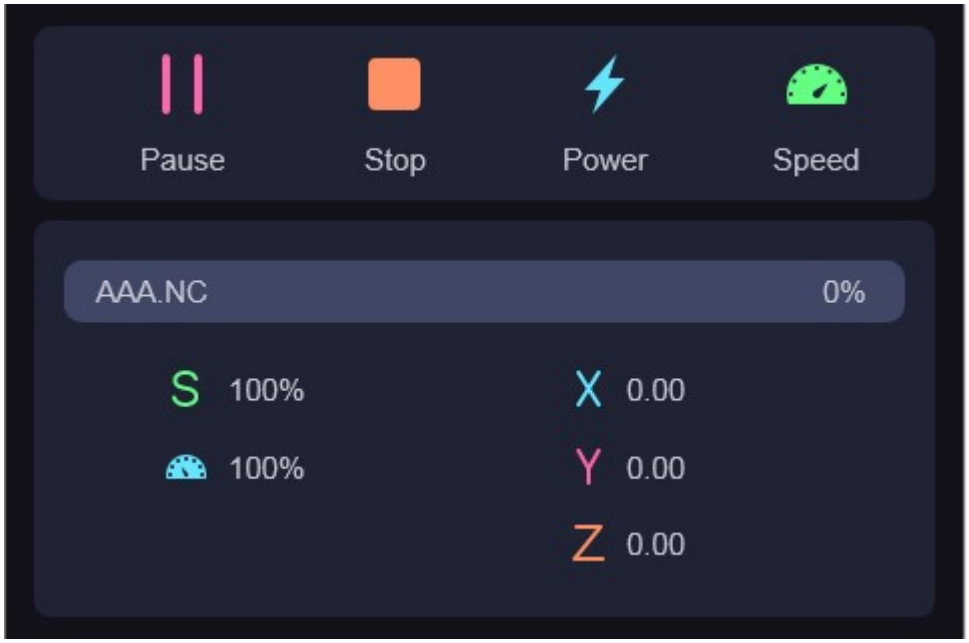

7. Set speed interface

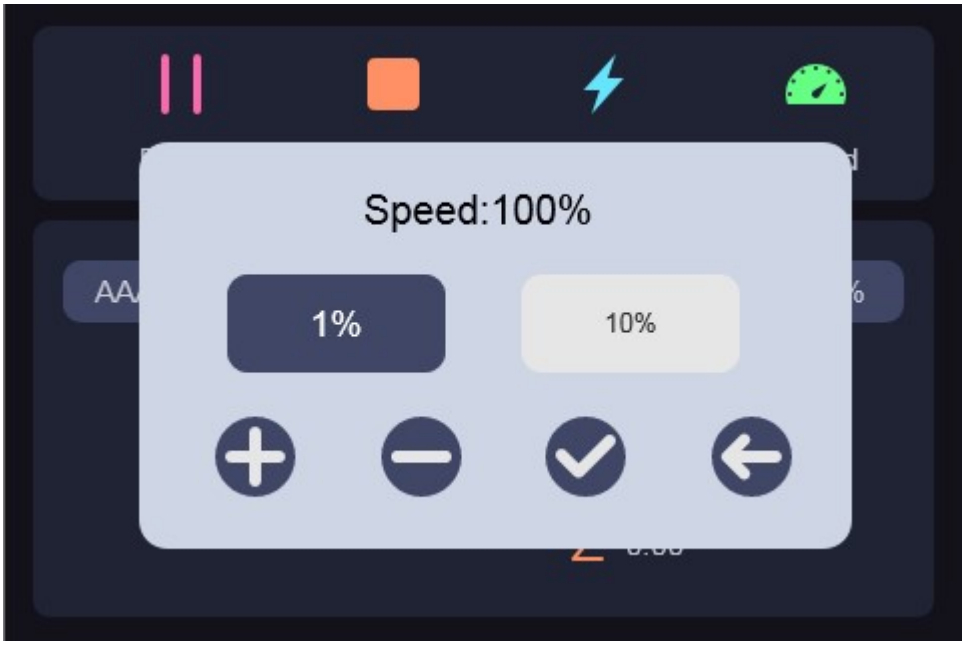

8.Terminate the engraving interface

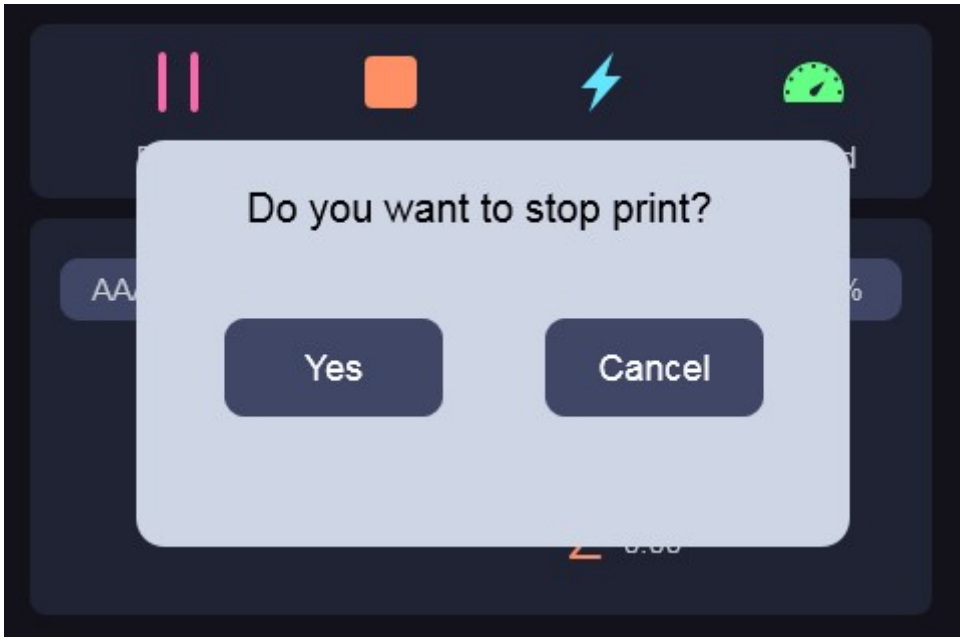

9. Engraving complete interface

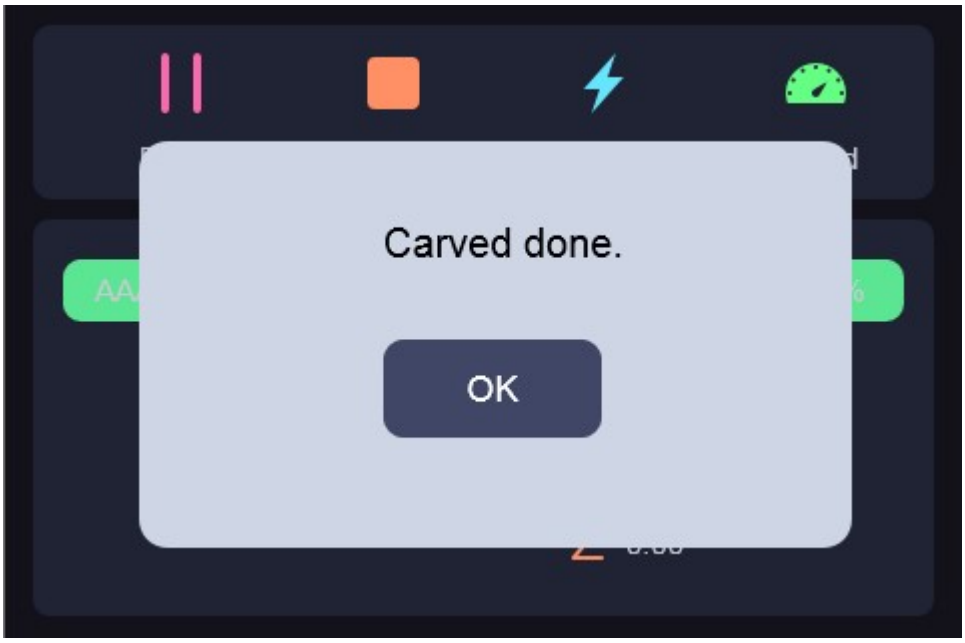

10. WIFI selection interface

11. Find WIFI interface

12. Enter WIFI password

13. Connect to WIFI interface

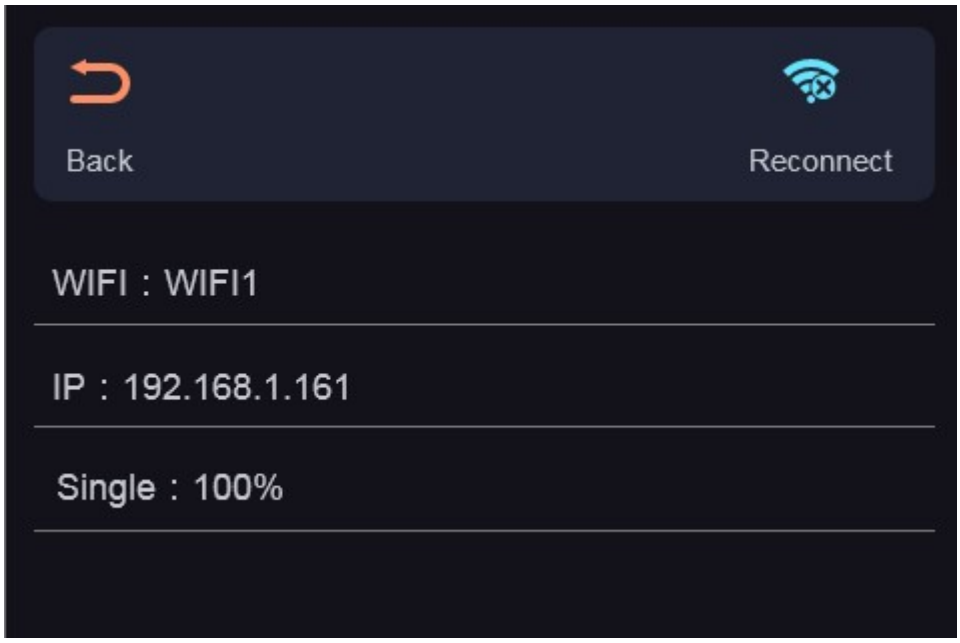

14. After connecting to the WIFI, read the IP address, enter the same IP address in the mobile phone or computer, and the offline control interface will pop up.

Select the corresponding file on the SD card to engrave, the method is the same as the above two software.

C. Installation and use of Cura 4.8 slicing software

(1) Software installation

The 3D printer reads Gcode files and prints. It is necessary to convert 3D files (such as STL files) into Gcode files for the machine to recognize. Software that converts the 3D file into Gcode files is called slicing software.

The video in the link below takes the installation of Cura4.8 on Mac OS and Windows as an example to demonstrate the process of software installation, adding models, and slicing the model.

Mac OS: https://www.youtube.com/watch?v=XKqRb434USw&t=96s

Windows: https://www.youtube.com/watch?v=jdLYBYFEBlQ&t=46s

D. FAQ manual

Question1: How to update the firmware?

1. Connect the data cable to your computer and printer and open the cura4.8.

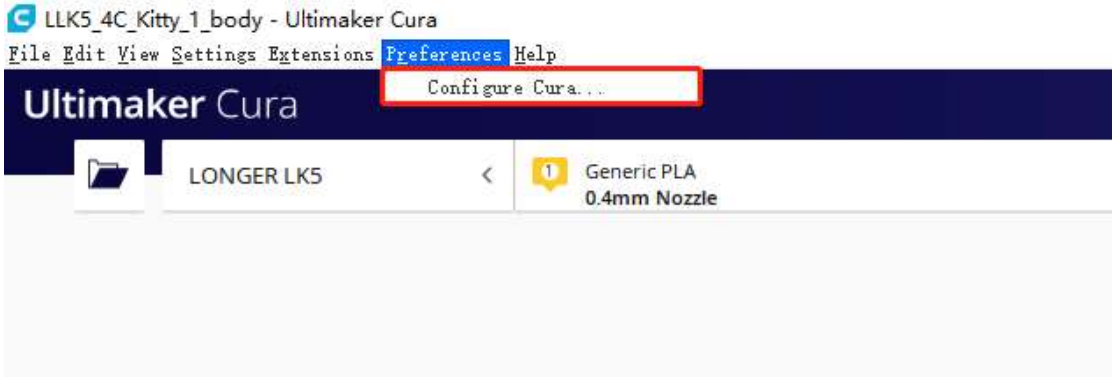

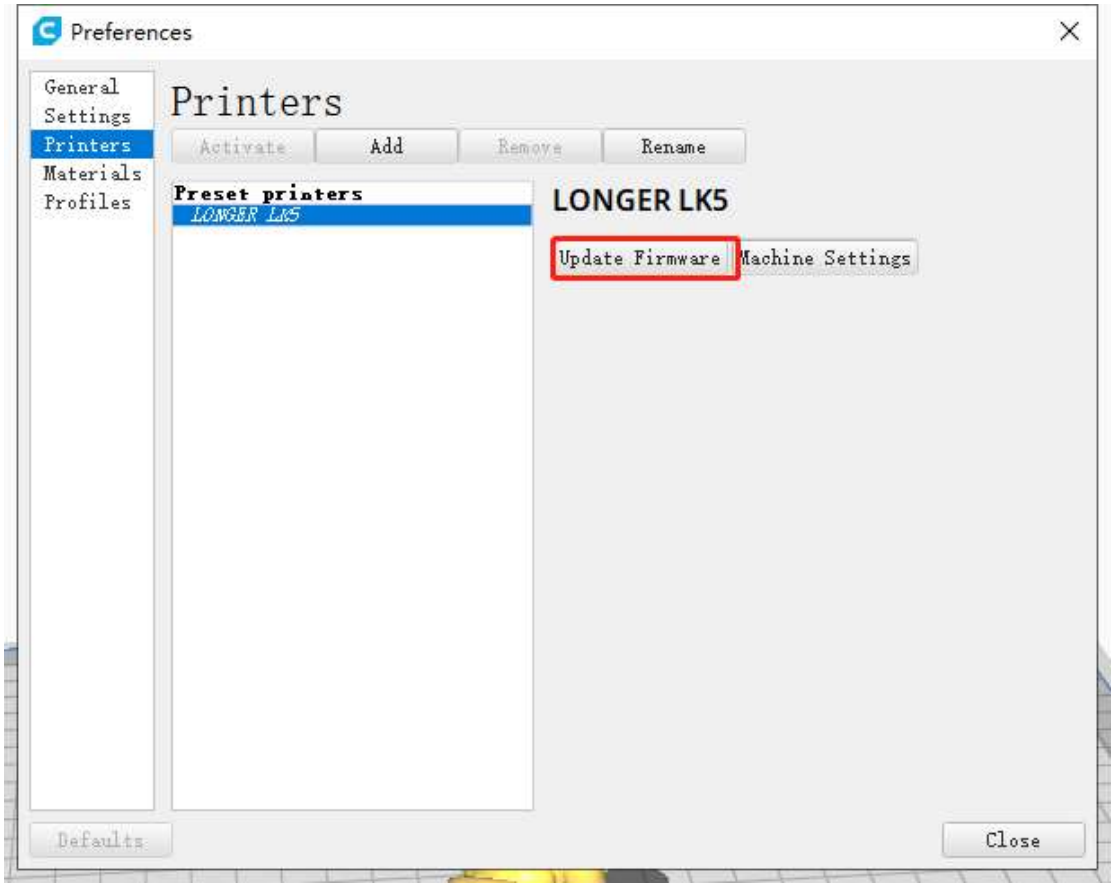

Question 2:What if the filament does not discharge from the machine?

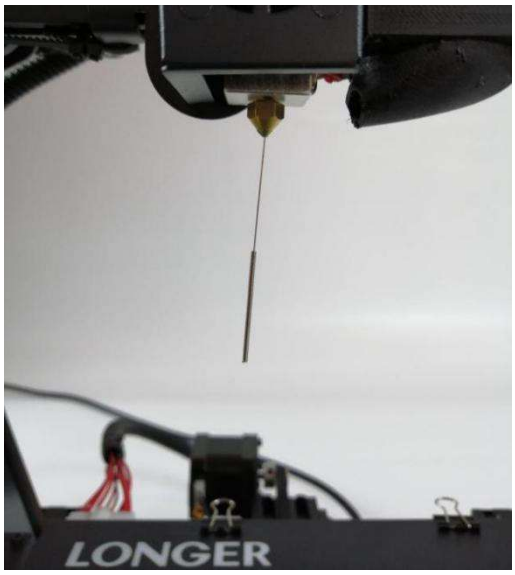

1. After the machine nozzle is heated, the consumables are normally fed into the feeding mechanism by hand, and then passed through the Teflon tube to enter the nozzle.

2. When it is found that the gear of the feeding mechanism emits a "beep" sound, it can first check whether the consumables are wound, causing the extrusion mechanism to pull the material.

3 If this is not the reason, raise the machine nozzle and use the 0.4mm needle in the toolbox to insert it from below the copper nozzle and rotate while inserting.

4. Under normal circumstances, this needle can be used to open the copper nozzle, so that the feed is smooth. The reason for this blocking is generally that there are impurities in the consumables, which leads to plugging.

Question 3:

When the machine returns the filament, it can't be returned. What should I do when stuck in the pneumatic joint?

1. Before returning the material, please heat the nozzle first, and then withdraw the consumables as soon as possible. If you can't pump it, you can re-feed the material with the advanced material, and melt the extruded block formed at the end of the consumable in the nozzle.

2. When withdrawing the consumables, before the end of the consumables reaches the pneumatic joint, we will usually pull the Teflon directly from the Teflon and cut the end of the consumables.

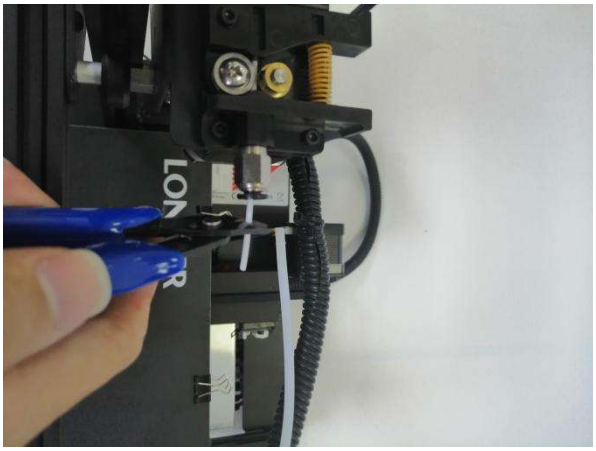

3. Because the end of the consumables in the nozzle will be deformed by heat, if the end deformed consumables are directly pulled out, it may be stuck to the pneumatic joint or the limit switch for damage detection. (The limit switch for the broken material detection is single. Towards).

Question 4: What should I do if I c

p

If the power is suddenly turned off when the part is first printed, the machine will not save the print data. Unless the height of the print exceeds 0.5mm, the power failure will be supported. If the height is less than 0.5mm, it is recommended to reprint directly.

Question 5:

The left side of the platform can be leveled, but the right side cannot be leveled.

If this happens, the X-axis beam is generally loose. At this time, the hex socket on the right side of the machine can be adjusted with a wrench to adjust the tightness.

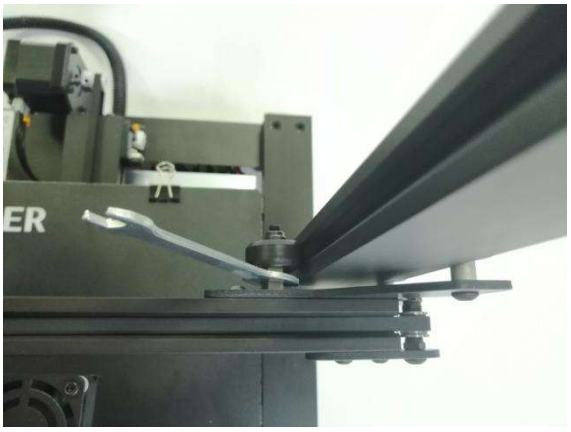

Question6:

Filament does not stick to the platform

1. After the user gets the 3D printer, if the leveling is found to be curled on the first layer of silk, it feels like it is gently falling on the platform. It can be judged that the leveling is not adjusted, and the nozzle is too high from the hot bed. ,

2. At this point we need to re-level, the quality of the leveling can largely determine the success rate of the part printing.

3. In addition, in order to ensure good contact between the model and the platform, we can set the larger plane of the model face down when slicing, and can also be set in the slicing software to add Raft to the model, which can make the model stick to the platform. Firm.

Question7:

Print online encounters no content on the right side.

First, install the driver files.

https://drive.google.com/file/d/1VeoTU4RIrx-EUwmA7G5sweaPux4-1Xl_/view?usp=sharing

Please refer to the video operation in the link below.

https://www.youtube.com/watch?v=KwmKZmtTOPw&t=6s

NOTE: After completing the operation, restart the software to start Print online。

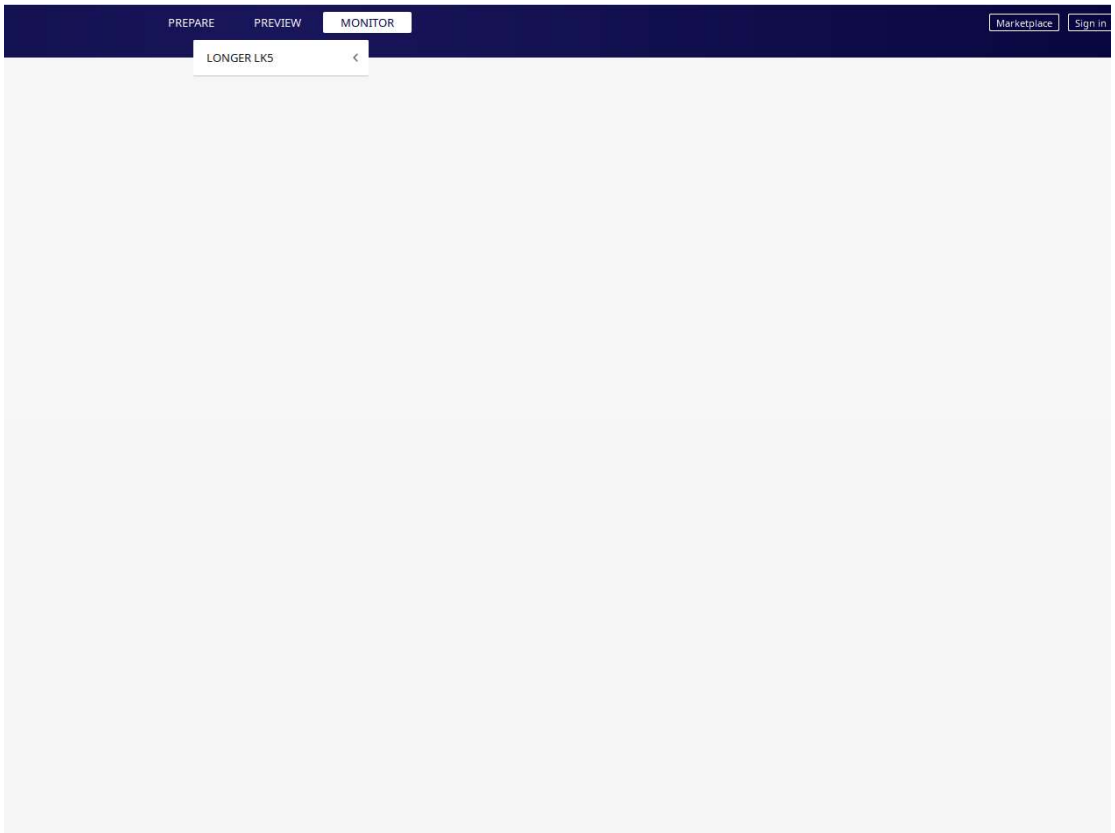

Question8:

The touch screen displays the file name garbled.

The file name should only contain English letters, underscore and space. File name contains special characters could not be recognized by the printer. In order to let the printer better recognize the Gcode file in the memory card, you need to back up all the files in the memory card to the computer, and keep the memory card only for the Gcode file, please save all the Gcode files in root directory of the memory card.

Question9: Warranty Periods

For LONGER official stores and LONGER designated distributors, RAY5 has an One-year International Limited Manufacturer warranty from the date of purchase of RAY5.

Please note the following warranty terms. One-year International Limited Manufacturer Warranty means that LONGER will provide the following free warranty services:

- Diagnostics and Evaluation;

- Technical Support;
- Replacement Parts under Warranty terms;

How to handle a warranty case

Any warranty case must be submitted to our official support channels (Email: support@LONGER3d.com). In case the product was bought from a reseller, contact us first so that we can help you diagnose the problem, then turn to your reseller for spare parts if needed.

Documentation needed for a warranty case:

1. Machine purchase order number and channel, nameplate number on the machine.
2. A brief description of the problem along with the clear evidence of its presence
(e.g., photos or videos)
3. On the initial contact for Customer Support further tests and diagnostic steps
might be required to identify the root cause of the problem.

Some parts of the RAY5 inevitably “get used up” over time. For these

parts, specific conditions apply, unless failure has occurred due to a defect in materials or workmanship.

Part	Warranty Limitation
motherboard	One-year International Limited Manufacturer Warranty
Motor,	One-year International Limited Manufacturer Warranty
LONGER Laser Module	One-year International Limited Manufacturer Warranty
touch screen,	One-year International Limited Manufacturer Warranty
Power Adapter	One-year International Limited Manufacturer Warranty
Chrome-plated rod	Warranty does not apply on normal wear and tear
2020 profile	Warranty does not apply on normal wear and tear
Coupling	Warranty does not apply on normal wear and tear
Eccentric nut	Warranty does not apply on normal wear and tear
Bearing	Warranty does not apply on normal wear and tear
L-shaped right-angle foot slot	Warranty does not apply on normal wear and tear
Goggles	Warranty does not apply on normal wear and tear
brush	Warranty does not apply on normal wear and tear
Board\ Acrylic board\ Stainless steel plate	Warranty does not apply on normal wear and tear
Linear Bearing Wheels	Warranty does not apply on normal wear and tear
GT2 6mm - 2mm Pitch Belts	Warranty does not apply on normal wear and tear
Powder-coated Aluminium Extrusion	Warranty does not apply on normal wear and tear
Cables & Drag Chain	Warranty does not apply on normal wear and tear
Cosmetic Appearance & Logos	Warranty does not apply on normal wear and tear

P.S. 1. The warranty does not cover normal, expected wear and tear caused by using the RAY5 for its intended purpose.

2. In case we have provided a free replacement part, the warranty does not reset. The original warranty period still applies.

This warranty is voided by:

- Any damages caused by improper assembly of the product.
- Any damage caused by improper use, maintenance or operation of the printer.
- Any damage caused by long-term lack of maintenance.
- Using the RAY5 in improper conditions (temperature, dustiness...).
- Upgrades, modifications or add-ons that are not officially supported.

P.S. Rest assured that our Technical Support Team is always available to help you out under any circumstances, even if the issue is not covered under warranty.

Feel free to contact us(email: support@LONGER3d.com) with any questions or inquiries with.

Thank you for purchasing Longer products! Under normal usage and service, the products and its parts have a warranty period up to one year. If you encounter any problems, please send an email to "support@ longer3d.com" to report any issue with Longer products. Our professional after-sale service would respond within 24 hours and help you to solve the issues.

FCC STATEMENT : This device complies with Part 15 of the FCC Rules. Operation is subject to the following two conditions: (1) This device may not cause harmful interference, and (2) This device must accept any interference received, including interference that may cause undesired operation. Warning: Changes or modifications not expressly approved by the party responsible for compliance could void the user's authority to operate the equipment. NOTE: This equipment has been tested and found to comply with the limits for a Class B digital device, pursuant to Part 15 of the FCC Rules. These limits are designed to provide reasonable protection against harmful interference in a residential installation. This equipment generates uses and can radiate radio frequency energy and, if not installed and used in accordance with the instructions, may cause harmful interference to radio communications. However, there is no guarantee that interference will not occur in a particular installation. If this equipment does cause harmful interference to radio or television reception, which can be determined by turning the equipment off and on, the user is encouraged to try to correct the interference by one or more of the following measures: Reorient or relocate the receiving antenna. Increase the separation between the equipment and receiver. Connect the equipment into an outlet on a circuit different from that to which the receiver is connected. Consult the dealer or an experienced radio/TV technician for help.

This equipment complies with FCC radiation exposure limits set forth for an uncontrolled environment. This equipment should be installed and operated with minimum distance 20cm between the radiator & your body.