RB2107

Stand-alone Bluetooth low energy module data sheet

HARDWARE INTEGRATION GUIDE VERSION 1.0

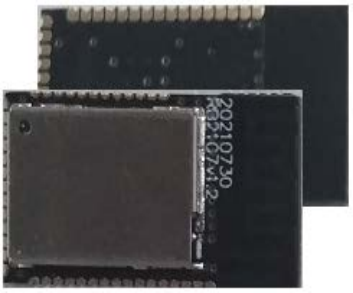

Abstract

This technical data sheet describes the RB2107 stand-alone Bluetooth® low energy module. The OEMs can embed their own application on top of the integrated Bluetooth low energy stack using Nordic Semiconductor SDK integrated development environment (IDE).

Revision history

Revision	Date	Name	Comments
1.0	07-Oct-2021		Initial preliminary release.

Contents

目录

1 Functional description 6
1.1 Features 6
1.2 Applications 7
1.3 Block diagram 7
1.4 Product specifications 8
2 Pin definition 10
2.1 Pin assignment 10
2.2 Peripheral pin assignments 11
3 Electrical specifications 10
3.1 Absolute maximum ratings 10
3.2 Operating conditions 10
3.3 General purpose I/O 10
3.4 Peripheral pin assignments 11
3.5 Module reset 11
3.6 Debug and programming 11
3.7 Clocks 11
4 Mechanical specifications 12
4.1 Dimensions 12
4.2 Recommended PCB land pads 12
4.3 Module marking 13
5 RF design notes 14
5.1 Recommended RF layout and ground plane 14
5.2 Mechanical enclosure 14
5.3 Antenna patterns 15
5.3.1 X-Y plane 15
5.3.2 X-Z plane 16
5.3.3 Y-Z plane 16
6 Qualification and approvals 17
6.1 United States (FCC): 17
6.1.1 Labeling and user information requirements 17
6.1.2 RF exposure 17
6.2 Canada (ISED) 18
6.2.1 Labeling and user information requirements 18
6.2.2 RF exposure 18
6.3 European Union regulatory compliance 19
6.3.1 Radio Equipment Directive (RED) 2014/53/EU 19
6.3.2 Labeling and user information requirements 19
6.4 Bluetooth qualification 19

7 Product handling 20
7.1 Packaging 20
7.1.1 RB2107 reel packaging 20
7.1.2 RB2107 carrier tape dimensions 20
7.2 Moisture sensitivity level 20
7.3 Reflow soldering 21
7.4 ESD precautions 21
8 Ordering Information 23
9 Life support and other high-risk warnings 24
Related documents 25
Contact 25

1 Functional description

The RB2107is a powerful, highly flexible, ultra-low power Bluetooth low energy module based on the nRF52832 SoC from Nordic Semiconductor. With an Arm® Cortex®-M4 with FPU 32-bit processor, embedded 2.4GHz transceiver, and integrated antenna, the RB2107 provides a complete RF solution with no additional RF design, allowing faster time to market. Providing full use of the nRF52832's capabilities and peripherals, the RB2107 can power the most demanding applications, all while simplifying designs and reducing BOM costs. With an internal DC-DC converter and intelligent power control, the RB2107 provides class-leading power efficiency, enabling ultra-low power sensitive applications. Regulatory pre-approvals reduce the burden to enter the market.

1.1 Features

- Based on the Nordic Semiconductor nRF52832 SoC
- Bluetooth 5 PHYs: LE 1M, LE 2M
- Bluetooth 5 features: Advertising Extensions, Channel Selection Algorithm #2
- Bluetooth mesh
- Complete RF solution with an integrated DC-DC converter
- Nordic Semiconductor SoftDevice ready
- Over-the-Air (OTA) firmware updates
- No external components required
- Arm® Cortex®-M4 with FPU 32-bit processor
- 512 kB embedded flash memory
- 64 kB RAM
- –40 °C to +85 °C Temperature range
- 32 General Purpose I/O Pins
- 12-bit/200 KSPS ADC
- Serial Wire Debug (SWD)
- Three SPI Master/Slave (8 Mbps)
- Two 2-wire Master/Slave (I2C compatible)
- UART (w/ CTS/RTS and DMA)

- I2S audio interface
- Low power comparator
- Temperature sensor
- Random number generator
- 20 channel CPU independent Programmable Peripheral Interconnect (PPI)
- Quadrature Demodulator (QDEC)
- 128-bit AES HW encryption
- 5 x 32 bit, 3 x 24 bit Real Timer Counters (RTC)
- NFC-A tag interface for OOB pairing
- Dimensions: 21.6 x 12 x 2.5 mm

1.2 Applications

- Beacons – iBeacon™, Eddystone, AltBeacon, etc.
- Low-power sensors
- Fitness devices
- Wearables
  - Climate control
  - Lighting
  - Safety and security
  - Home appliances
  - Access control
  - Internet of Things
  - Home health care
  - Advanced remote controls
  - Smart energy management
  - Low-power sensor networks
  - Interactive entertainment
  - Key fobs
  - Environmental monitoring
  - Hotel automation
  - Office automation

1.3 Block diagram

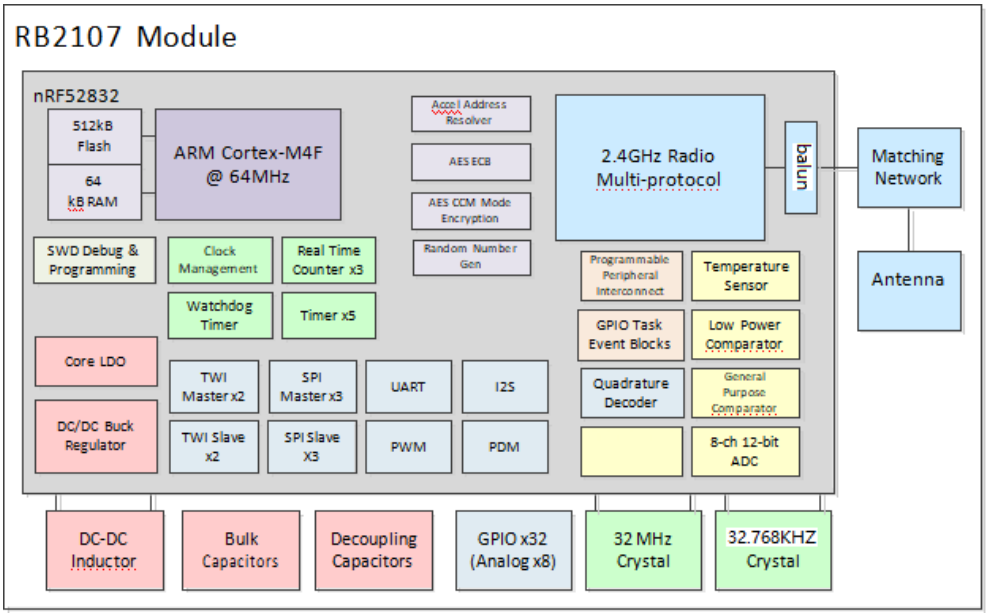

Figure 1: Block diagram of RB2107

1.4 Product specifications

Detail	Description
Bluetooth	
Bluetooth version	Bluetooth 5 low energy, Concurrent Central & Peripheral (S132), 2M LE PHY, 1M LE PHY, Advertising Extensions, CSA #2 Bluetooth Mesh
Security	AES-128
LE connections	Concurrent central, observer, peripheral, and broadcaster roles with up to twenty concurrent connections along with one Observer and one Broadcaster (S132)
Radio	
Frequency	2.402 GHz to 2.480 GHz
Modulations	GFSK at 1 Mbps, 2 Mbps data rates
Transmit power	1.89dBm(for EU)
Receiver sensitivity	–96 dBm (Bluetooth low energy mode)
Antenna	Integrated (–1dBi peak)
Current consumption	
TX only @ +4 dBm, 0 dBm @ 3V, DCDC enabled	7.5 mA, 5.3 mA
TX only @ +4 dBm, 0 dBm	16.6 mA, 11.6 mA
RX only @ 1 Mbps @ 3V, DCDC enabled	5.4 mA
RX only @ 1 Mbps	11.7 mA
CPU @ 64MHz from flash, from RAM	7.4 mA, 6.7 mA
CPU @ 64MHz from flash, from RAM @ 3V, DCDC	3.7 mA, 3.3 mA
System Off, On	0.3 µA, 1.2 µA
Additional current for RAM retention	30 nA / 4KB block
Dimensions	
Length	21.6 mm ± 0.3mm
Width	12.0 mm ± 0.3mm
Height	2.5 mm ± 0.1mm
Hardware	
Interfaces	SPI Master/Slave x 3 UART Two-Wire Master/Slave (I2C) x 2 I2S PWM PDM GPIO x 32
Power supply	1.7 V to 3.6 V
Temperature range	–40 °C to +85 °C
Certifications	
USA (FCC)	FCC part 15.247 modular certification
Canada (ISED)	ISED RSS-247 modular certification
Europe (CE-RED)	EN 62368-1:2014+A11:2017 EN 62479:2010 EN 301 489-1 V2.2.3 EN 301 489-17 V3.2.4 EN 300 328 V2.2.2

Detail	Description
Bluetooth	BT5 RF-PHY Component (Tested) – DID: xxxxxxx; QDID: xxxxxx (applying)
Radio chip	
Nordic Semiconductor nRF52832	Additional details: nRF52832 Product Specification [3] nRF Connect SDK [4] nRF5 Software Development Kit [5]

Table 1: Product specifications

2 Pin definition

2.1 Pin assignment

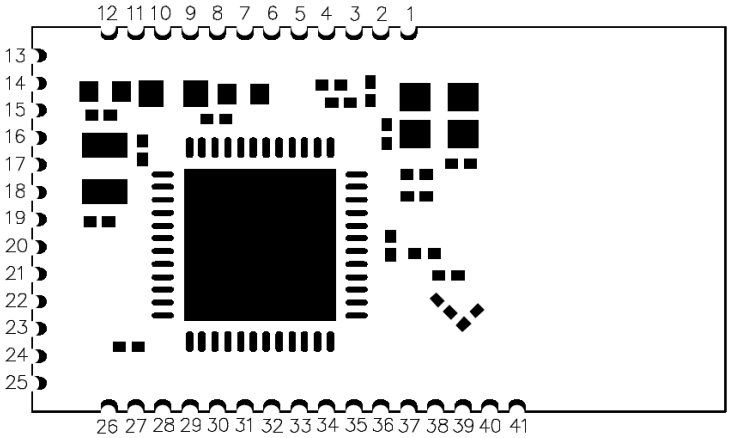

Figure 2: RB2107 Pin assignment (top view)

Pin No.	Name	I/O	Description	nRF52 pin	Remarks
1	GND	Power	Electrical Ground		
2	GND	Power	Electrical Ground		
3	P0.25	I/O	GPIO	P0.25	Use as low drive, low frequency GPIO only. Added a 12 pF capacitance to ground on the module. See Nordic Semiconductor errata 138 [6]
4	P0.26	I/O	GPIO	P0.26	Use as low drive, low frequency GPIO only. Added a 12 pF capacitance to ground on the module. See Nordic Semiconductor errata 138 [6]
5	P0.27	I/O	GPIO	P0.27	Use as low drive, low frequency GPIO only
6	P0.28	I/O	GPIO/AIN4	P0.28	Pin is analog capable, use as low drive, low frequency GPIO only
7	P0.29	I/O	GPIO/AIN5	P0.29	Pin is analog capable, use as low drive, low frequency GPIO only
8	P0.30	I/O	GPIO/AIN6	P0.30	Pin is analog capable, use as low drive, low frequency GPIO only
9	P0.31	I/O	GPIO/AIN7	P0.31	Pin is analog capable, use as low drive, low frequency GPIO only
10	NC				Not connected
11	NC				Not connected
12	VCC	Power	+1.7V to +3.6V		An internal 4.7 µF bulk capacitor is included on the module. However, it is good design practice to add additional bulk capacitance as required for your application, i.e., those with heavy GPIO usage and/or current draw.
13	GND	Power	Electrical Ground		
14	NC	I/O		P0.00	Not connected. Integrated a 32.768khz clock crystal with +/- 10ppm of frequency tolerance on the module
15	NC	I/O		P0.01	
16	P0.02	I/O	GPIO/AIN0	P0.02	Pin is analog capable

No.	Name	I/O	Description	nRF52 pin	Remarks
17	P0.03	I/O	GPIO/AIN1	P0.03	Pin is analog capable
18	P0.04	I/O	GPIO/AIN2	P0.04	Pin is analog capable
19	P0.05	I/O	GPIO/AIN3	P0.05	Pin is analog capable
20	P0.06	I/O	GPIO	P0.06	
21	P0.07	I/O	GPIO	P0.07	
22	P0.08	I/O	GPIO	P0.08	
23	P0.09	I/O	GPIO/NFC1	P0.09	NFC pin 1 (default, NFC function is disabled)
24	P0.10	I/O	GPIO/NFC2	P0.10	NFC pin 2 (default, NFC function is disabled)
25	GND	Power	Electrical Ground		
26	P0.11	I/O	GPIO	P0.11	
27	P0.12	I/O	GPIO	P0.12	
28	P0.13	I/O	GPIO	P0.13	
29	P0.14	I/O	GPIO/TRACEDATA[3]	P0.14	
30	P0.15	I/O	GPIO/TRACEDATA[2]	P0.15	
31	P0.16	I/O	GPIO/TRACEDATA[1]	P0.16	
32	P0.17	I/O	GPIO	P0.17	
33	P0.18	I/O	GPIO/TRACEDATA[0] /SWO	P0.18	
34	P0.19	I/O	GPIO	P0.19	
35	P0.20	I/O	GPIO/TRACECLK	P0.20	
36	P0.21	I/O	GPIO/RESET_N	P0.21	May be used as active low reset input
37	SWCLK	I	SWD Clock	SWCLK	
38	SWDIO	I/O	SWD IO	SWDIO	
39	P0.22	I/O	GPIO	P0.22	Use as low drive, low frequency GPIO only
40	P0.23	I/O	GPIO	P0.23	Use as low drive, low frequency GPIO only
41	P0.24	I/O	GPIO	P0.24	Use as low drive, low frequency GPIO only

Table 2: RB2107 pin-out

2.2 Peripheral pin assignments

The peripherals within the RB2107 may be assigned to nearly any of the GPIO pins through the application. There are some restrictions called out by the nRF52832 product specification. See the Remarks in **Error! Reference source not found.** Also note that certain peripherals are assigned to particular pins, such the analog inputs.

☞ Only one peripheral signal can be multiplexed to a GPIO pin at a time. Trace signals, analog inputs, XTAL signals, SWD interface, and reset are restricted to certain pins due to additional internal circuitry required by the interface. See Table 3.

Peripheral	Signal	Pin options
UART0, I2C0, SPI0, SPI1, PDM, PWM0	All	P0.00-P0.31
ADC, COMP, LPCOMP	All	P0.02-P0.05, P0.28-P0.31 (AIN0-AIN7)
Reset	RESET_N	P0.21

Peripheral	Signal	Pin options
SWD	SWD Clock	SWCLK
	SWD IO	SWDIO

Table 3: Peripheral pin options

3 Electrical specifications

⚠ Stressing the device above one or more of the ratings listed in the Absolute maximum ratings cancause permanent damage. These are stress ratings only. Operating the module at these or at any conditions other than those specified in the Operating conditions should be avoided. Exposure toabsolute maximum rating conditions for extended periods can affect device reliability.

☞ Operating condition ranges define those limits within which the functionality of the device isguaranteed. Where application information is given, it is advisory only and does not form part of the specification.

3.1 Absolute maximum ratings

Symbol	Description	Min	Max	Unit
V_{CC_MAX}	Voltage on supply pin	–0.3	3.9	V
V_{IO_MAX}	Voltage on GPIO pins (VCC > 3.6 V)	–0.3	3.9	V
V_{IO_MAX}	Voltage on GPIO pins (VCC ≤ 3.6V)	–0.3	VCC+0.3 V	V
T_S	Storage Temperature Range	–40	125	°C

Table 4: Absolute maximum ratings

⚠ The product is not protected against overvoltage or reversed voltages. If necessary, voltage spikesexceeding the power supply voltage specification, given in table above, must be limited to values within the specified boundaries by using appropriate protection devices.

3.2 Operating conditions

☞ Unless otherwise specified, all operating condition specifications are at an ambient temperatureof 25 °C and a supply voltage of 3.0 V.

⚠ Operation beyond the specified operating conditions is not recommended and extended exposurebeyond them may affect device reliability.

Symbol	Parameter	Min	Typ.	Max	Unit
V_{CC}	Operating supply voltage	1.7	3.0	3.6	V
T_{R_VCC}	Supply rise time (0 V to 1.7 V)	-	-	60	ms
T_A	Operating ambient temperature range	–40	25	85	° C

Table 5: Operating conditions

3.3 General purpose I/O

The general purpose I/O is organized as one port enabling access and control of the 32 available GPIOpins via one port, P0. Each GPIO can be accessed with the following user configurable features:

- Input/output direction
- Output drive strength
- Internal pull-up and pull-down resistors
- Wake-up from high- or low-level triggers on all pins
- Trigger interrupt on all pins
- All pins can be used by the PPI task/event system; the maximum number of pins that can be interfaced through the PPI at the same time is limited by the number of GPIOTE channels
- All pins can be individually configured to carry serial interface or quadrature demodulator signals

Symbol	Parameter	Min	Typ.	Max	Unit
V_{IH}	Input high voltage	0.7 x VCC	-	VCC	V
V_{IL}	Input low voltage	VSS	-	0.3 x VCC	V
V_{OH}	Output high voltage	VCC – 0.4	-	VCC	V
V_{OL}	Output low voltage	VSS	-	VSS +0.4	V
R_{PU}	Pull-up resistance	11	13	16	kΩ
R_{PD}	Pull-down resistance	11	13	16	kΩ

Table 6: GPIO

3.4 Peripheral pin assignments

The peripherals within the RB2107 may be assigned to nearly any of the GPIO pins through the application. There are some restrictions called out by the nRF52832 product specification. See the remarks column of Table 2. Also note that certain peripherals are assigned to particular pins, such the analog inputs and NFC antenna.

3.5 Module reset

GPIO pin P0.21 may be used for a hardware reset. In order to utilize P0.21 as a hardware reset, the UICR registers PSELRESET[0] and PSELRESET[1] must be set alike, to the value of 0x7FFFFF15. When P0.21 is programmed as RESET, the internal pull-up is automatically enabled. Nordic Semiconductor example applications and development kits program P0.21 as RESET_N.

3.6 Debug and programming

The RB2107 supports the two pin Serial Wire Debug (SWD) interface and offers flexible and powerful mechanism for non-intrusive debugging of program code. Breakpoints, single stepping, and instruction trace capture of code execution flow are part of this support.

The RB2107 also supports ETM and ITM trace. Trace data from the ETM and the ITM is sent to an external debugger via a 4-bit wide parallel trace port. In addition to parallel trace, the TPIU supports serial trace via the Serial Wire Output (SWO) trace protocol.

3.7 Clocks

The RB2107 requires two clocks, a high frequency clock and a low frequency clock.

The high frequency clock is provided on-module by a high-accuracy 32 MHz crystal as required by the nRF52832 for radio operation.

The low frequency clock can be provided internally by an RC oscillator or synthesized from the fast clock, or externally by a 32.768 kHz crystal Using the internal RC oscillator with calibration provides acceptable performance for Bluetooth low energy applications at a reduced cost and slight increasein power consumption.

A 32.768 kHz crystal with +/-10ppm of frequency error is provided on the module, The 32.768khz crystal can provides the lowest power consumption and greatest accuracy.

4 Mechanical specifications

4.1 Dimensions

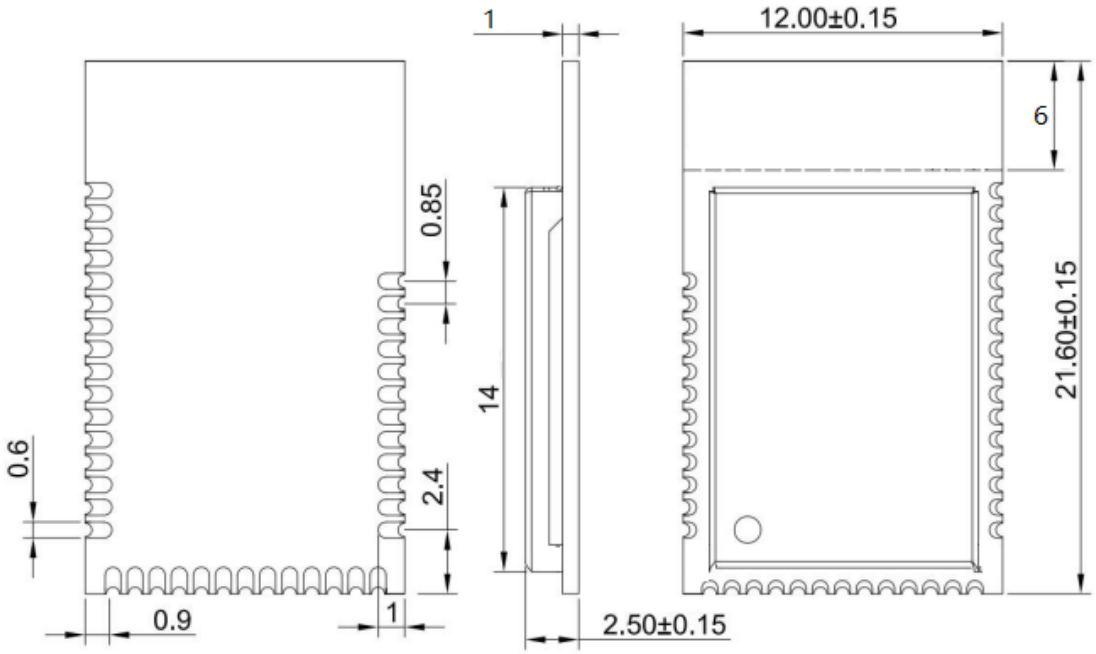

UNIT:mm Tolerance:+/-0.1

4.2 Recommended PCB land pads

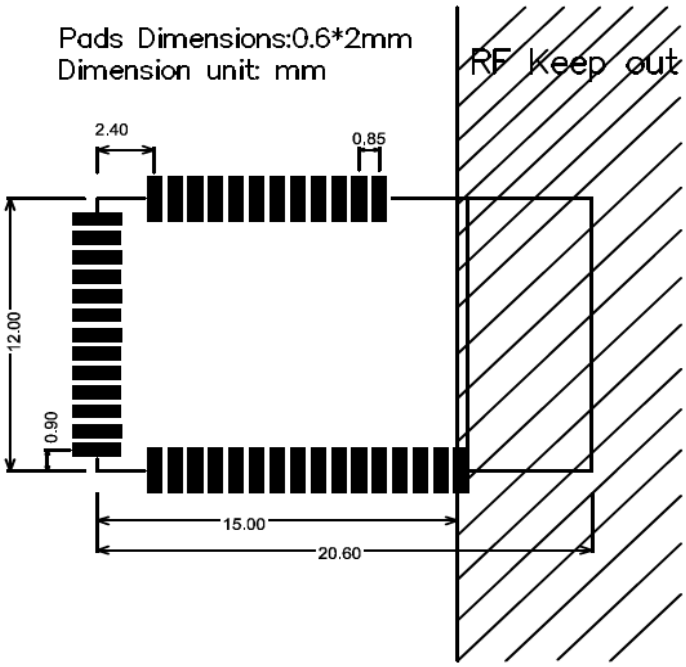

4.3 Module marking

Figure 5: Module marking

Reference	Description
1	FCC ID (USA)
2	Data Matrix with unique serial number of six alphanumeric symbols, also in human-readable form. The full Bluetooth address consists of the IEEE OUI (94:54:93) with the six symbols appended: Example value:
	94:54:93:XX:YY:ZZ
3	ISED ID (Canada)

Table 10: RB2107 module marking

5 RF design notes

5.1 Recommended RF layout and ground plane

For the RB2107, the integrated antenna requires a suitable ground plane to radiate effectively.

The area under and extending out from the antenna portion of the module should be kept clear of copper and other metal. The module should be placed at the edge of the PCB with the antenna edge facing out. Reducing the ground plane from that shown in Figure 8 will reduce the effective radiated power. For example, a 27 mm x 29 mm board (about the size of a coin cell) has approximately 3 dB lower output than the RB2107 Evaluation Board.

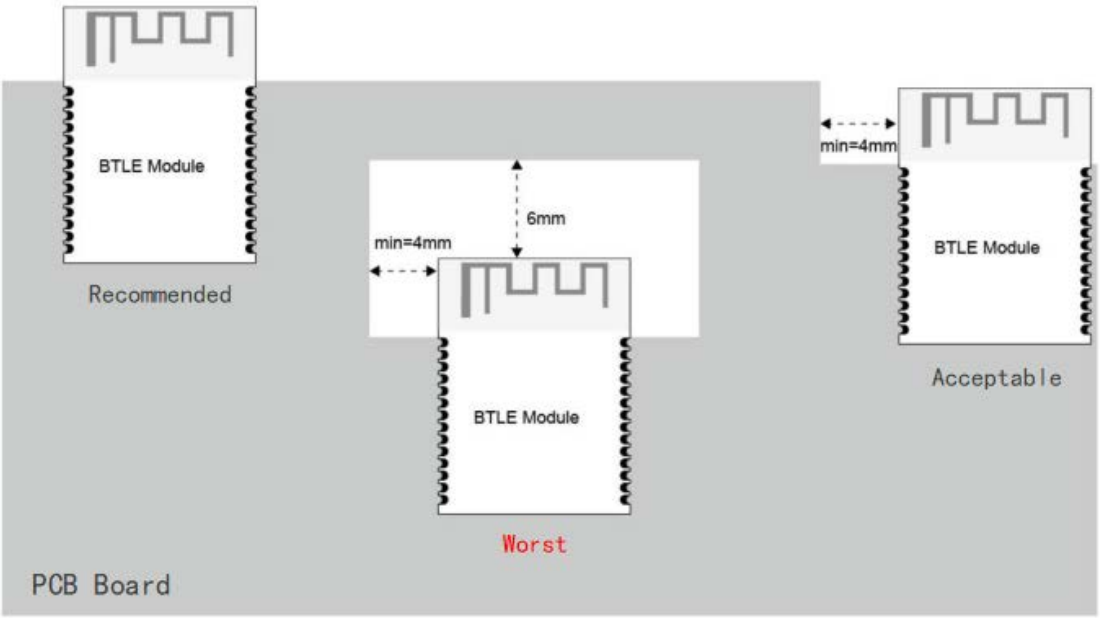

Figure 8: Recommended RF layout and ground plane

5.2 Mechanical enclosure

Care should be taken when designing and placing the RB2107 into an enclosure. Metal should be kept clear from the antenna area, both above and below. Any metal around the module can negatively impact RF performance.

The module is designed and tuned for the antenna and RF components to be in free air. Any potting, epoxy fill, plastic over-molding, or conformal coating can negatively impact RF performance and must be evaluated by the customer.

5.3 Antenna patterns

Antenna patterns are based on the B2107 Evaluation kit with a ground plane size of82 mm x 60 mm. The X-Y-Z orientation is shown in Figure 9:

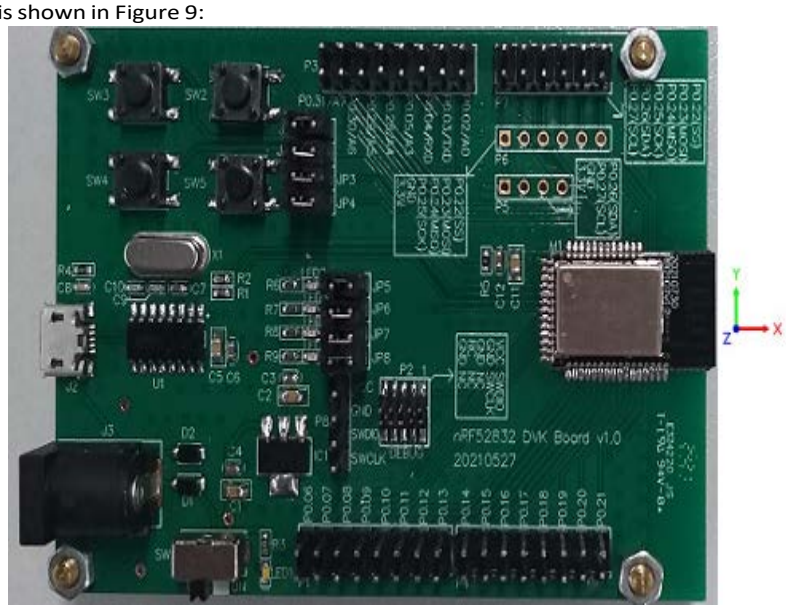

Figure 9: RB2107 evaluation kit X-Y-Z orientation

5.3.1 X-Y plane

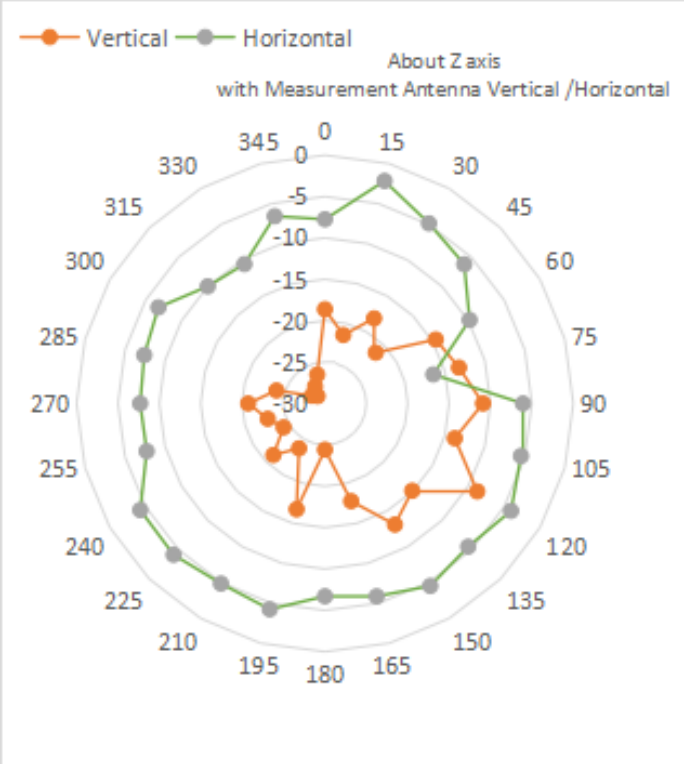

Figure 10: X-Y plane antenna pattern

The outer-most ring is 0 dB. Each division is –5 dB.

5.3.2 X-Z plane

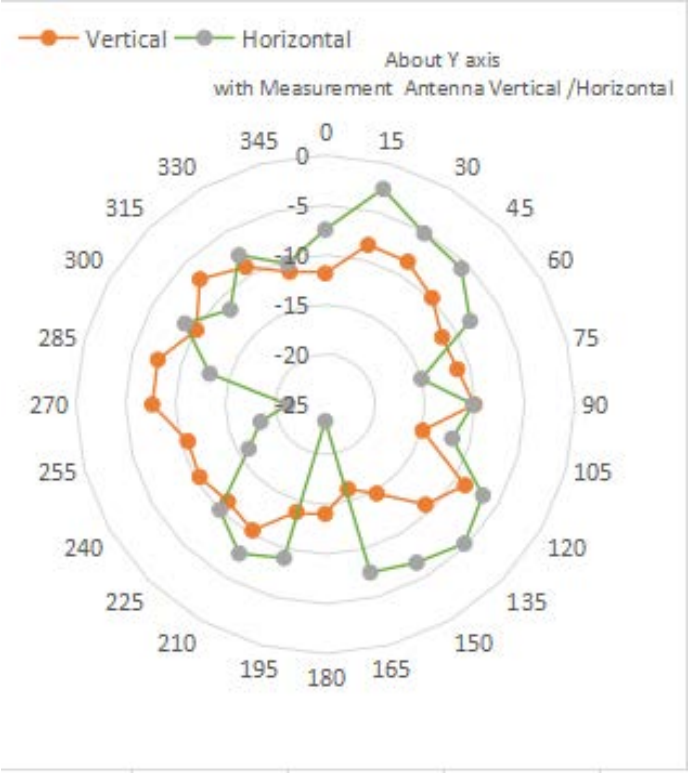

Figure 11: X-Z plane antenna pattern

The outer-most ring is 0 dB. Each division is –5 dB.

5.3.3 Y-Z plane

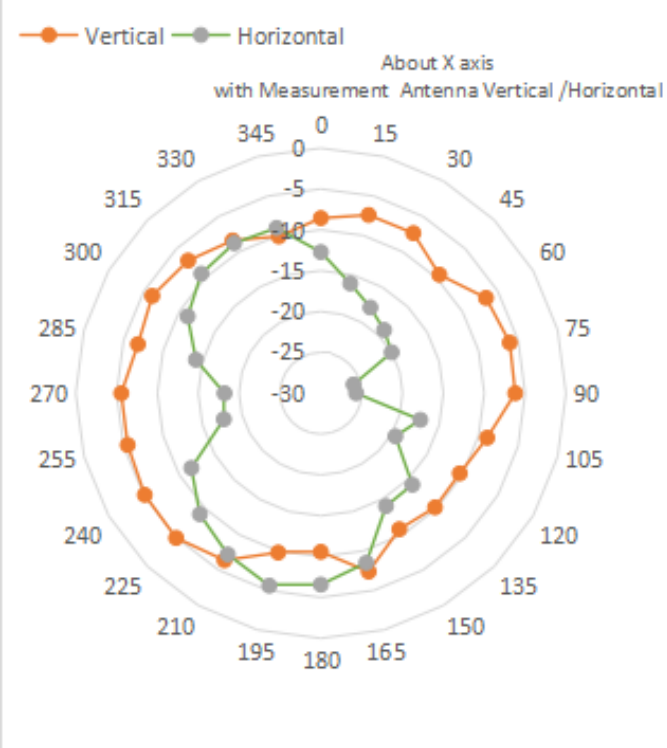

Figure 12: Y-Z plane antenna pattern

The outer-most ring is 0 dB. Each division is –5 dB.

6 Qualification and approvals

6.1 United States (FCC):

The RB2107 has received Federal Communications Commission (FCC) CFR47 Telecommunications, Part 15 Subpart C “Intentional Radiators” modular approval in accordance with Part 15.247 Modular Transmitter approval. The modular approval allows the end user to integrate the module into a finished product without obtaining subsequent and separate FCC approvals for intentional radiation, provided no changes or modifications are made to the module circuitry. Changes or modifications could void the user’s authority to operate the equipment. The end user must comply with all of the instructions provided by the Grantee, which indicate installation and/or operating conditions necessary for compliance.

The finished product is required to comply with all applicable FCC equipment authorizations regulations, requirements and equipment functions not associated with the transmitter module portion. For example, compliance must be demonstrated to regulations for other transmitter components within the host product; to requirements for unintentional radiators (Part 15 Subpart B “Unintentional Radiators”), such as digital devices, computer peripherals, radio receivers, etc.; and to additional authorization requirements for the non-transmitter functions on the transmitter module (i.e., Verification, or Declaration of Conformity) (e.g., transmitter modules may also contain digital logic functions) as appropriate.

§ 15.19 Statement

This device complies with Part 15 of the FCC Rules. Operation is subject to the following two conditions: (1) this device may not cause harmful interference, and (2) this device must accept any interference received, including interference that may cause undesired operation.

§ 15.21 Information to user

Warning: changes or modifications not expressly approved by the party responsible for compliance could void the user’s authority to operate the equipment.

- List of applicable FCC rules:

47 CFR Part 15, Subpart C 15.247

47 CFR Part 2.1093

- Summarize the specific operational use conditions

This module can be used in IOT devices, the input voltage to the module is nominally 3.2-5V.

- Limited module procedures

This module is not a limited module.

- Trace antenna designs

The antenna is not a trace antenna.

If you desire to increase antenna gain and either change antenna type or use same antenna type certified, a Class II permissive change application is required to be filed by us, or you (host manufacturer) can take responsibility through the change in FCC ID (new application) procedure followed by a Class II permissive change application.

List of Antenna

Antenna Type:	Integrated
Antenna Gain:	-1dBi

*those antenna gains measured at impedance 50ohm.

§ 15.105 Information to user

This equipment has been tested and found to comply with the limits for a Class B digital device, pursuant to Part 15 of the FCC Rules. These limits are designed to provide reasonable protection against harmful interference in a residential installation. This equipment generates, uses and can radiate radio frequency energy and, if not installed and used in accordance with the instructions, may cause harmful interference to radio communications. However, there is no guarantee that interference will not occur in a particular installation.

If this equipment does cause harmful interference to radio or television reception, which can be determined by turning the equipment off and on, the user is encouraged to try to correct the interference by one or more of the following measures:

-- Reorient or relocate the receiving antenna.

-- Increase the separation between the equipment and receiver.

-- Connect the equipment into an outlet on a circuit different from that to which the receiver is connected.

-- Consult the dealer or an experienced radio/TV technician for help.

☞ Modification to this product will void the users' authority to operate this equipment.

⚠ The OEM is still responsible for verifying end product compliance with FCC Part 15, subpart Blimits for unintentional radiators through an accredited test facility.

6.1.1 Labeling and user information requirements

The RB2107 is assigned the FCC Grantee code: 2A3BF

If the FCC ID is not visible when the module is installed inside another device, then the outside of the finished product into which the module is installed must also display a label referring to the enclosed module. This exterior label can use the following or similar wording:

Contains FCC ID: 2A3BF-RB2107

In addition to marking the product with the appropriate FCC ID, the end product user manual may also require specific information based on the digital device classification. Refer to the FCC Rules, Title 47, Subchapter A, Part 15, Subpart B/ Subpart C for specific wording of the notices.

6.1.2 RF exposure

All transmitters regulated by FCC must comply with RF exposure requirements. KDB 447498 General RF Exposure Guidance provides guidance in determining whether proposed or existing transmitting facilities, operations or devices comply with limits for human exposure to Radio Frequency (RF) fields adopted by the Federal Communications Commission (FCC).

This Module complies with FCC radiation exposure limits set forth for an uncontrolled environment. This equipment should be installed and operated with a minimum distance of 20cm between the radiator and your body. This transmitter must not be co-located or operating in conjunction with any other antenna or transmitter.

6.1.3 Information on test modes and additional testing requirements

The OEM integrator is responsible for ensuring that the end-user has no manual instruction to remove or install module.

The module is limited to installation in mobile application, a separate approval is required for all other operating configurations, including portable configurations with respect to §2.1093 and difference antenna configurations.
Test software: nRF_DTM

6.1.4 FCC other Parts, Compliance Requirements for Host product manufacturer

This modular transmitter is only FCC authorized for the specific rule parts listed on our grant, host product manufacturer is responsible for compliance to any other FCC rules that apply to the host not covered by the modular transmitter grant of certification.

Host manufacturer in any case shall ensure host product which is installed and operating with the module is in compliant with FCC Part requirements.

Please note that For a Class B or Class A digital device or peripheral, the instructions furnished the user manual of the end-user product shall include statement set out in §15.105 Information to the user or such similar statement and place it in a prominent location in the text of host product manual. Original texts as following:

For Class B

Note: This equipment has been tested and found to comply with the limits for a Class B digital device, pursuant to part 15 of the FCC Rules. These limits are designed to provide reasonable protection against harmful interference in a residential installation. This equipment generates, uses and can radiate radio frequency energy and, if not installed and used in accordance with the instructions, may cause harmful interference to radio communications. However, there is no guarantee that interference will not occur in a particular installation. If this equipment does cause harmful interference to radio or television reception, which can be determined by turning the equipment off and on, the user is encouraged to try to correct the interference by one or more of the following measures:
—Reorient or relocate the receiving antenna.
—Increase the separation between the equipment and receiver.
—Connect the equipment into an outlet on a circuit different from that to which the receiver is connected.
—Consult the dealer or an experienced radio/TV technician for help.

For Class A

Note: This equipment has been tested and found to comply with the limits for a Class A digital device, pursuant to part 15 of the FCC Rules. These limits are designed to provide reasonable protection against harmful interference when the equipment is operated in a commercial environment. This equipment generates, uses, and can radiate radio frequency energy and, if not installed and used in accordance with the instruction manual, may cause harmful interference to radio communications. Operation of this equipment in a residential area is likely to cause harmful interference in which case the user will be required to correct the interference at his own expense.

6.2 Canada (ISED)

The RB2107 module is certified for use in Canada under Innovation, Science and Economic Development Canada (ISED) Radio Standards Specification (RSS) RSS-247 and RSS-Gen.

6.2.1 Labeling and user information requirements

The RB2107 is assigned the IC:20439-RB2107

Labeling Requirements for the Host Device (from Section 4, RSS-Gen, Issue 5, April 2018): The host device shall be properly labeled to identify the module within the host device. The IndustryCanada certification label of a module shall be clearly visible at all times when installed in the host device, otherwise the host device must be labeled to display the Industry Canada certification numberof the module, preceded by the words “Contains transmitter module”, or the word “Contains”, or similar wording expressing the same meaning, as follows:

> Contains transmitter module IC:**20439-RB2107**

User Manual Notice for License-Exempt Radio Apparatus (from Section 8.4, RSS-Gen, Issue 5, April 2018): User manuals for license-exempt radio apparatus shall contain the following or equivalent notice in a conspicuous location in the user manual or alternatively on the device or both:

> This device complies with Industry Canada license exempt RSS standard(s). Operation is subject to the following two conditions: (1) this device may not cause interference, and (2) this device must accept any interference, including interference that may cause undesiredoperation of the device.
> Transmitter Antenna (from Section 6.8, RSS-Gen, Issue 5, April 2018): User manualsfor transmitters shall display the following notice in a conspicuous location:
> Under Industry Canada regulations, this radio transmitter may only operate using an antenna of a type and maximum (or lesser) gain approved for the transmitter by Industry Canada. To reduce potential radio interference to other users, the antenna type and its gainshould be so chosen that the equivalent isotropically radiated power (e.i.r.p.) is not more thanthat necessary for successful communication.

6.2.2 RF exposure

This equipment complies with IC RSS-102 radiation exposure limits set forth for an uncontrolled environment. This equipment should be installed and operated with minimum distance 20cm between the radiator and your body.

Cet équipement est conforme aux limites d'exposition aux radiations IC CNR-102 établies pour un environnement non contrôlé. Cet équipement doit être installé et utilisé avec une distance minimale de 20cm entre le radiateur et votre corps. Cet émetteur ne doit pas être colocalisé ou fonctionner en conjonction avec une autre antenne ou un autre émetteur.

Please notice that if the IC identification number is not visible when the module is installed inside another device, then the outside of the device into which the module is installed must also display a label referring to the enclosed module. This exterior label can use wording such as the following: “Contains IC: 20439-RB2107” any similar wording that expresses the same meaning may be used.

L’étiquette d’homologation d’un module d’Innovation, Sciences et Développement économique Canada devra être posée sur le produit hôte à un endroit bien en vue, en tout temps. En l’absence d’étiquette, le produit hôte doit porter une étiquette sur laquelle figure le numéro d’homologation du module d’Innovation, Sciences et Développement économique Canada, précédé du mot « contient », ou d’une

formulation similaire allant dans le même sens et qui va comme suit :

Contient IC: 20439-RB2107 est le numéro d'homologation du module

This radio transmitter [IC:20439-RB2107] has been approved by Innovation, Science and Economic Development Canada to operate with the antenna types listed below, with the maximum permissible gain indicated. Antenna types not included in this list that have a gain greater than the maximum gain indicated for any type listed are strictly prohibited for use with this device.

a list of all antenna types
Integrated Antenna -1dBi, 50Ω

6.2.3 ISED compliance statement

This device contains licence-exempt transmitter(s)/receiver(s) that comply with Innovation, Science and Economic Development Canada's licence-exempt RSS(s). Operation is subject to the following two conditions:

(1) This device may not cause interference.

(2) This device must accept any interference, including interference that may cause undesired operation of the device.

L'émetteur/récepteur exempt de licence contenu dans le présent appareil est conforme aux CNR d'Innovation, Sciences et Développement économique Canada applicables aux appareils radio exempts de licence. L'exploitation est autorisée aux deux conditions suivantes :

(1) L'appareil ne doit pas produire de brouillage;

(2) L'appareil doit accepter tout brouillage radioélectrique subi, même si le brouillage est susceptible d'en compromettre le fonctionnement.

6.3 European Union regulatory compliance

Information about regulatory compliance of the European Union for the RB2107 module is availablein the RB2107 Declaration of Conformity.

6.3.1 Radio Equipment Directive (RED) 2014/53/EU

The RB2107 module complies with the essential requirements and other relevant provisions of Radio Equipment Directive (RED) 2014/53/EU.

Hereby, [Ryder Electronics (Shenzhen) Ltd.] declares that the radio equipment type [RB2107] is in compliance with Directive 2014/53/EU. The full text of the EU declaration of conformity is available at the following internet address: http:// www.ryderems.com.

6.3.2 Labeling and user information requirements

The label on the final products which contain the RB2107 module must follow CE marking requirements. The “Official Journal of the European Union” provides guidance on final product CE marking.

6.4 Bluetooth qualification

The Bluetooth SIG maintains the Bluetooth Specification, and ensures that products are properly tested and comply with the Bluetooth license agreements. Companies that list products with the Bluetooth SIG are required to be members of the SIG and submit the listed fees. Refer to this link for details: https://www.bluetooth.com/develop-with-bluetooth/qualification-listing

The RB2107 Bluetooth Low Energy module based on the Nordic Semiconductor nRF52832 is listedas a “Tested Component”, with Qualified Design ID XXXXXX(Applying). This allows an end-product based on a RB2107 module to inherit the component listings without the need to run through all of the tests again. The end-product will often inherit several QDIDs, and are identified on a “Declaration of Compliance”.

The RB2107 primarily utilizes the S132 SoftDevice.

7 Product handling

7.1 Packaging

7.1.1 RB2107 reel packaging

Modules are packaged on 330 mm reels loaded with 850 modules. Each reel is placed in an antistatic bag with a desiccant pack and humidity card and placed in a 340x350x65 mm box. An antistatic warning and reel label are adhered to the outside of the bag.

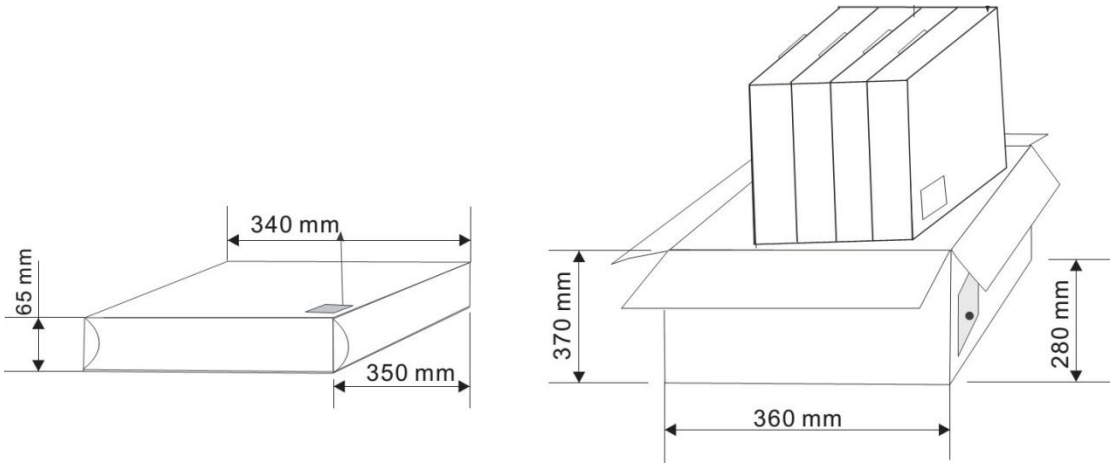

Figure 13: Reel cartons used for type number RB2107

7.1.2 RB2107 carrier tape dimensions

The RB2107 modules are placed in the carrier tape specified in Figure 14.

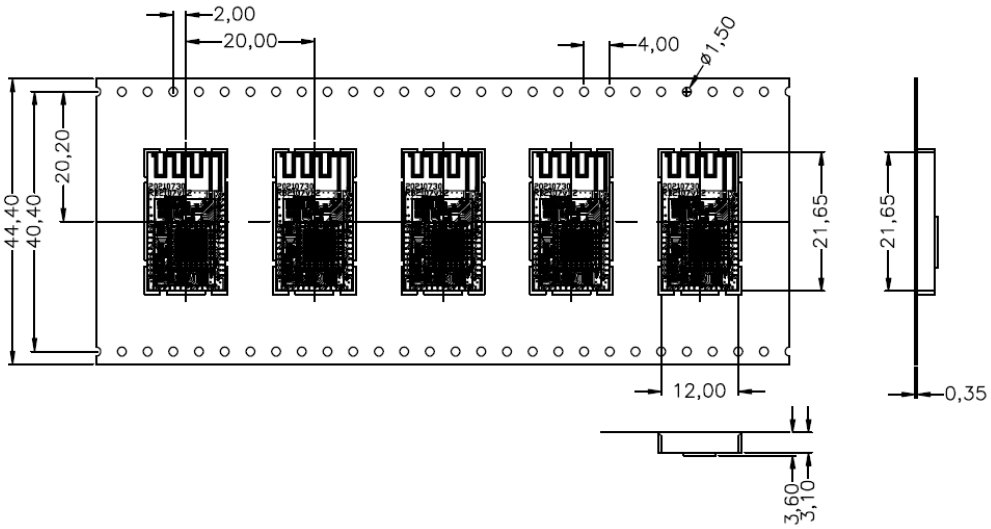

packaging	specifications	net weight	Gross weight	size
number	850PCS			W=330mm, T=50.4mm

Figure 14: RB2107 carrier tape dimensions

7.2 Moisture sensitivity level

The RB2107 Series is rated for MSL 3, 168-hour floor life after opening.

7.3 Reflow soldering

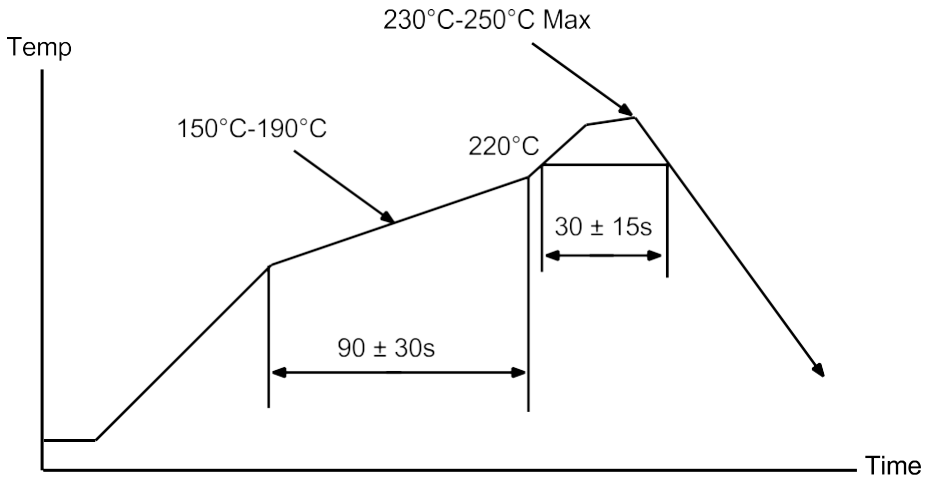

Figure 16: Reflow Profile for Lead Free Solder

7.4 ESD precautions

⚠ The RB2107 module contains highly sensitive electronic circuitry and is an ElectrostaticSensitive Device (ESD). Handling the RB2107 module without proper ESD protection may destroy or damage them permanently.

Proper ESD handling and packaging procedures must be applied throughout the processing, handling and operation of any application that incorporates the RB2107 module. Failure to observe these recommendations can result in severe damage to the device.

8 Ordering information

Ordering Code	Product
RB2107	RB2107 module, Rev A, Tape & Reel, 1000-piece multiples

Table 12: Product ordering codes

9 Life support and other high-risk warnings

This product is not designed nor intended for use in a life support device or system, nor for use in other fault-intolerant, hazardous or other environments requiring fail-safe performance, such as any application in which the failure or malfunction of the product could lead directly or indirectly to death, bodily injury, or physical or property damage (collectively, “High-Risk Environments”).

⚠ RYDER expressly disclaims any express or implied warranty of fitness for use in high-risk environments.

The customer using this product in a High-Risk Environment agrees to indemnify and defend RYDER from and against any claims and damages arising out of such use.

Related documents

[1] Nordic Semiconductor, nRF52832 Product Specification
[2] Nordic Semiconductor, nRF Connect SDK
[3] Nordic Semiconductor, nRF5 Software Development Kit
[4] Nordic Semiconductor, nRF52832 errata 138

Contact