EMC TEST REPORT

Test Report No.	:	KES-EM-21T0970
Date of Issue	:	Oct. 06, 2021
Product name	:	TOUCHLESS & WIRELESS SWITCH
Model/Type No.	:	WPS100
Variant Model	:	AERWAVE
Applicant	:	RITS-N CO.,LTD
Applicant Address	:	628 ITECO, 150, Jojeong-daero, Hanam-si, Gyeonggi-do, South Korea 12930
Manufacturer	:	RITS-N CO.,LTD
Manufacturer Address	:	628 ITECO, 150, Jojeong-daero, Hanam-si, Gyeonggi-do, South Korea 12930
FCC ID	:	2A3C4-WPS100
Date of Receipt	:	Sep. 01, 2021
Test date	:	Sep. 14, 2021 ~ Sep. 15, 2021
Test Results	:	☒ **In Compliance** ☐ **Not in Compliance**

Tested by

Do Hyun, Ko
EMC Test Engineer

Reviewed by

Dong Hun, Jang
EMC Technical Manager

This report shall not be reproduced except in full, without the written approval of KES Co., Ltd.
The results shown in this test report refer only to the sample(s) tested unless otherwise stated.
The authenticity of the test report, contact shchoi@kes.co.kr

REPORT REVISION HISTORY

Date	Test Report No.	Revision History
Oct. 06, 2021	KES-EM-21T0970	Issued

This report shall not be reproduced except in full, without the written approval of KES Co., Ltd. This document may be altered or revised by KES Co., Ltd. personnel only, and shall be noted in the revision section of the document. Any alteration of this document not carried out by KES Co., Ltd. will constitute fraud and shall nullify the document.

This report shall not be reproduced except in full, without the written approval of KES Co., Ltd.
The results shown in this test report refer only to the sample(s) tested unless otherwise stated.
The authenticity of the test report, contact shchoi@kes.co.kr

TABLE OF CONTENTS

1.0 General Product Description 4
1.1 Test Voltage & Frequency 5
1.2 Variant Model Differences 5
1.3 Device Modifications 5
1.4 Equipment Under Test 5
1.5 Support Equipments 5
1.6 External I/O Cabling 6
1.7 EUT Operating Mode(s) 6
1.8 Configuration 7
1.9 Remarks when standards applied 8
1.10 Calibration Details of Equipment Used for Measurement 8
1.11 Test Facility 8
1.12 Measurement Procedure 8
1.13 Laboratory Accreditations and Listings 9
2.0 Test Regulations 10
2.1 Conducted Emissions at Mains Power Ports 12
2.2 Radiated Electric Field Emissions(Below 1 ㎓) 13
2.3 Radiated Electric Field Emissions(Above 1 ㎓) 14
APPENDIX A – TEST DATA 15
Conducted Emissions at Mains Power Ports 15
Radiated Electric Field Emissions(Below 1 ㎓) 17
Radiated Electric Field Emissions(Above 1 ㎓) 18
APPENDIX B - Test Setup Photos and Configuration 20
Radiated Electric Field Emissions(Below 1 ㎓) 21
Radiated Electric Field Emissions(Above 1 ㎓) 22

This report shall not be reproduced except in full, without the written approval of KES Co., Ltd.
The results shown in this test report refer only to the sample(s) tested unless otherwise stated.
The authenticity of the test report, contact shchoi@kes.co.kr

1.0 General Product Description

Main Specifications of EUT are:

Item	Details
Operating Frequency	2.4 ㎓ Band
Power	DC 3 V (Battery x 2 ea)
Size	(95 x 95 x 20) ㎜
Current Consumption	< 0.5 mWh
Transmitting distance	10 m
Operating Temperature	(-20 ~50) ℃

This report shall not be reproduced except in full, without the written approval of KES Co., Ltd.
The results shown in this test report refer only to the sample(s) tested unless otherwise stated.
The authenticity of the test report, contact shchoi@kes.co.kr

1.1 Test Voltage & Frequency

Unless indicated otherwise on the individual data sheet or test results, the test voltage and frequency was as indicated below.

☒ DC 3 V (Battery x 2 ea)

1.2 Variant Model Differences

Addition of derivative models for place of sale management

1.3 Device Modifications

Not applicable

1.4 Equipment Under Test

Description	Model Number	Serial Number	Manufacturer	Remarks
TOUCHLESS & WIRELESS SWITCH	WPS100	-	RITS-N CO.,LTD	EUT

1.5 Support Equipments

Description	Model Number	Serial Number	Manufacturer	Remarks
WIRELESS TOUCH SWITCH RECEIVER	R24	-	RITS-N CO.,LTD	-
Digital multi tester	DM-1010	-	DONG HWA	-
Motion detector	MS805	-	-	-

This report shall not be reproduced except in full, without the written approval of KES Co., Ltd.
The results shown in this test report refer only to the sample(s) tested unless otherwise stated.
The authenticity of the test report, contact shchoi@kes.co.kr

1.6 External I/O Cabling

Start		END		Cable Spec.	
Description	**I/O Port**	**Description**	**I/O Port**	**Length**	**Shield**
TOUCHLESS & WIRELESS SWITCH (EUT)	Wireless	WIRELESS TOUCH SWITCH RECEIVER	Wireless	-	-
WIRELESS TOUCH SWITCH RECEIVER	2 Pin	Digital multi tester	2 Pin	1.6	U
	4 Pin	Motion detector	4 Pin	3.0	U

* Unshielded = U, Shielded = S

1.7 EUT Operating Mode(s)

Test mode	Bluetooth
OPERATION	Confirmed the operation of the EUT through of the Digital multi tester and EUT's LED

EUT Test operating S/W		
Name	**Version**	**Manufacture Company**
-	-	-

This report shall not be reproduced except in full, without the written approval of KES Co., Ltd.
The results shown in this test report refer only to the sample(s) tested unless otherwise stated.
The authenticity of the test report, contact shchoi@kes.co.kr

1.8 Configuration

■ AC Main
□ DC Main

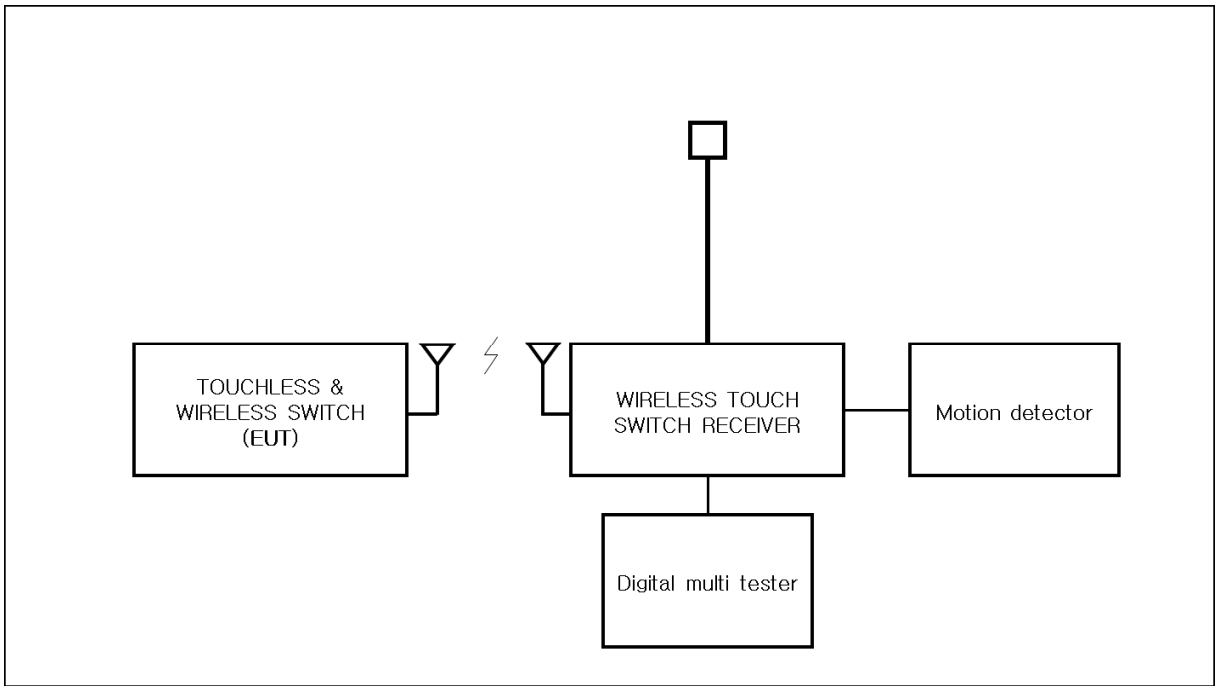

This report shall not be reproduced except in full, without the written approval of KES Co., Ltd.
The results shown in this test report refer only to the sample(s) tested unless otherwise stated.
The authenticity of the test report, contact shchoi@kes.co.kr

1.9 Remarks when standards applied

N/A

1.10 Calibration Details of Equipment Used for Measurement

Test equipment and test accessories are calibrated on regular basis. The maximum time between calibrations is one year or what is recommended by the manufacturer, whichever is less.

1.11 Test Facility

The measurement facility is located at 473-21 Gayeo-ro, Yeoju-si, Gyeonggi-do, 12658, Korea. The sites are constructed in conformance with the requirements of ANSI C63.4:2014 and CISPR 16-1-4:2019

1.12 Measurement Procedure

- Conducted Emissions

The conducted emission levels were measured on each current-carrying line with the spectrum analyzer operating in the CISPR quasi-peak mode (or peak mode if applicable). The initial step in collecting conducted data is a spectrum analyzer peak scan of the measurement range. If the conducted emission exceed the average limit with the instrument set to the quasi-peak mode, the measurements are made in the average mode. The emission spectrum was scanned from 150 ㎑ to 30 ㎒. The highest emission amplitudes relative to the appropriate limits were measured and have been recorded. Quasi-peak readings are distinguished with a "QP".

- Radiated Electric Field Emissions

The test was done at a SEMI ANECHOIC CHAMBER with quasi-peak detector. The final test data was measured using a Quasi-Peak detector below 1㎓ at 10 m or 3 m distance and a Peak and Average detector above 1 ㎓ at 3 m distance. Test was proceeded worst case test mode and cable configuration.
Measurements were made with the antenna positioned in both the horizontal and vertical planes of polarization. The antenna height was varied from 1 m to 4 m and the EUT was rotated 360° to find the maximum emitting point for each frequency.

Measurement procedures was In accordance with ANSI C63.4-2014 7.3.3, 7.3.4, 8.3.1.1, 8.3.1.2, 8.3.2.1, 8.3.2.2

This report shall not be reproduced except in full, without the written approval of KES Co., Ltd.
The results shown in this test report refer only to the sample(s) tested unless otherwise stated.
The authenticity of the test report, contact shchoi@kes.co.kr

1.13 Laboratory Accreditations and Listings

Country	Agency	Scope of Accreditation	Logo
KOREA	**RRA**	EMI (3 m & 10 m Semi-Aechoic Chamber ,10 m Open Area and conducted test site) EMS (ESD, RS, EFT/Burst, Surge, CS, Magnetic, Dips and interruptions)	KR0100
International	**KOLAS**	EMI (3 m & 10 m Semi-Aechoic Chamber , and conducted test site) EMS (ESD, RS, EFT/Burst, Surge, CS, Magnetic, Dips and interruptions)	KT489
USA	**FCC**	3 m & 10 m Semi-Aechoic Chamber, 10 m Open Area and Conducted test site to perform FCC Part 15/18 measurements.	KR0100
Canada	**ISED**	3 m & 10 m Semi-Aechoic Chamber and Conducted test site	23298-1
JAPAN	**VCCI**	Mains Ports Conducted Interference Measurement, Telecommunication Ports Conducted Disturbance Measurement and Radiation 10 meter site, Facility for measuring radiated disturbance above 1 GHz	R-20056, C-20036 T-20040, G-20057
Europe	**TÜV SÜD**	EMI (3 m & 10 m Semi-Aechoic Chamber , 10 m Open Area and conducted test site) EMS (ESD, RS, EFT/Burst, Surge, CS, Magnetic, Dips and interruptions)	CARAT 001633 0004

This report shall not be reproduced except in full, without the written approval of KES Co., Ltd.
The results shown in this test report refer only to the sample(s) tested unless otherwise stated.
The authenticity of the test report, contact shchoi@kes.co.kr

2.0 Test Regulations

The emissions tests were performed according to following regulations:

☐ **EMC – Directive 2014/30/EU**

☐ EN 61000-6-3:2011

☐ EN 61000-6-1:2007

☐ EN 61000-6-4:2007 +A1:2011

☐ EN 61000-6-2:2005

☐ EN 55011:2007 +A1:2010 ☐ Group 1 ☐ Group 2
☐ Class A ☐ Class B

☐ EN 55014-1:2006 +A2:2011

☐ EN 55014-2:1997 +A2:2008

☐ EN 55015:2013

☐ EN 55032:2015 ☐ Class A ☐ Class B

☐ EN 55024:2010

☐ EN 50130-4:2011 +A1:2014

☐ EN 61000-3-2:2014

☐ EN 61000-3-3:2013

☐ EN 61326-1:2013

This report shall not be reproduced except in full, without the written approval of KES Co., Ltd.
The results shown in this test report refer only to the sample(s) tested unless otherwise stated.
The authenticity of the test report, contact shchoi@kes.co.kr

☐ **VCCI V-3 / 2015.04** ☐ Class A ☐ Class B

☐ **AS/NZS:2013** ☐ Class A ☐ Class B

☒ **47 CFR Part 15, Subpart B**

- ☐ CISPR 22:2009 +A1:2010 ☐ Class A ☐ Class B
- ☒ ANSI C63.4-2014 ☒ Class A ☐ Class B

☐ **IC Regulation ICES-003 : 2016**

- ☐ CAN/CSA CISPR 22-10 ☐ Class A ☐ Class B
- ☐ ANSI C63.4-2014 ☐ Class A ☐ Class B

☐ **RE– Directive 2014/53/EU**

☐ EN 301 489-1 V1.9.2

- ☐ Equipment for fixed use
- ☐ Equipment for vehicular use
- ☐ Equipment for portable use

☐ EN 301 489-3 V1.6.1

☐ EN 301 489-17 V2.2.1

☐ EN 60945:2002

This report shall not be reproduced except in full, without the written approval of KES Co., Ltd.
The results shown in this test report refer only to the sample(s) tested unless otherwise stated.
The authenticity of the test report, contact shchoi@kes.co.kr

2.1 Conducted Emissions at Mains Power Ports

Test Date
N/A

Test Location
Electro wave Shieldroom #6

Test Equipment

Used	Description	Model Number	Manufacturer	Serial Number	Cal. Due	calibration interval
☐	EMI Test S/W	EMC32	R & S	9.12.00	-	-
☐	EMI TEST RECEIVER	ESR3	R & S	101783	01, 15, 2022	1 Year
☐	LISN	ENV216	R & S	101787	12, 29, 2021	1 Year
☐	LISN	ESH2-Z5	R & S	100450	12, 29, 2021	1 Year
☐	PULSE LIMITER	ESH3-Z2	R & S	101915	12, 29, 2021	1 Year

Test Conditions
Temperature: (±) ℃
Relative Humidity: (±) % R.H.

Frequency Range of Measurement
150 ㎑ to 30 ㎒

Instrument Settings
IF Band Width: 9 ㎑

Test Results
The requirements are:

☐ PASS
☐ NOT PASS
☒ NOT APPLICABLE

Remarks
It is not applied, because The EUT is powered by Battery

This report shall not be reproduced except in full, without the written approval of KES Co., Ltd.
The results shown in this test report refer only to the sample(s) tested unless otherwise stated.
The authenticity of the test report, contact shchoi@kes.co.kr

2.2 Radiated Electric Field Emissions(Below 1 ㎓)

Test Date
Sep. 15, 2021

Test Location
☐ OPEN AREA TEST SITE #2 ☒ SEMI ANECHOIC CHAMBER #4

Test Equipment

Used	Description	Model Number	Manufacturer	Serial Number	Cal. Due	calibration interval
☒	EMI Test S/W	EP5/RE	TOYO Corporation	6.0.0	-	-
☒	EMI TEST RECEIVER	ESU26	R & S	100551	04, 01, 2022	1 Year
☒	AMPLIFIER	SCU 01	R & S	100603	11, 25, 2021	2 Year
☒	TRILOG-BROADBAND ANTENNA	VULB9163	Schwarzbeck	715	12, 08, 2022	1 Year
☒	ATTENUATOR	8491A	HP	32173	03, 10, 2022	1 Year

Test Conditions
Temperature: (24,2 ± 0,1) ℃
Relative Humidity: (50,3 ± 0,1) % R.H.

Frequency Range of Measurement
30 ㎒ to 1 ㎓

Instrument Settings
IF Band Width: 120 ㎑

Test Results
The requirements are:

☒ PASS
☐ NOT PASS
☐ NOT APPLICABLE

Remarks
- See Appendix A for test data.
- The fundamental of the EUT was investigated in there orthogonal orientations X, Y and Z.

This report shall not be reproduced except in full, without the written approval of KES Co., Ltd.
The results shown in this test report refer only to the sample(s) tested unless otherwise stated.
The authenticity of the test report, contact shchoi@kes.co.kr

2.3 Radiated Electric Field Emissions(Above 1 ㎓)

Test Date
Sep. 14, 2021

Test Location
SEMI ANECHOIC CHAMBER #5

Test Equipment

Used	Description	Model Number	Manufacturer	Serial Number	Cal. Due	calibration interval
☒	EMI Test S/W	EP5/RE	TOYO Corporation	6.0.120	-	-
☒	EMI TEST RECEIVER	ESU26	Rohde & Schwarz	100552	04, 01, 2022	1 Year
☒	HORN ANTENNA	BBHA 9120D	SCHWARZBECK	9120D-1802	12, 14, 2021	1 Year
☒	PREAMPLIFIER	8449B	HP	3008A00538	06, 21, 2022	1 Year

Test Conditions
Temperature: (25,1 ± 0,1) ℃
Relative Humidity: (50,5 ± 0,1) % R.H.

Frequency Range of Measurement
1 ㎓ to 18 ㎓

Instrument Settings
IF Band Width: 1 ㎒

Test Results
The requirements are:

☒ PASS
☐ NOT PASS
☐ NOT APPLICABLE

Remarks
- See Appendix A for test data.
- The fundamental of the EUT was investigated in there orthogonal orientations X, Y and Z.

This report shall not be reproduced except in full, without the written approval of KES Co., Ltd.
The results shown in this test report refer only to the sample(s) tested unless otherwise stated.
The authenticity of the test report, contact shchoi@kes.co.kr

APPENDIX A – TEST DATA

Conducted Emissions at Mains Power Ports

HOT LINE

N/A

This report shall not be reproduced except in full, without the written approval of KES Co., Ltd.
The results shown in this test report refer only to the sample(s) tested unless otherwise stated.
The authenticity of the test report, contact shchoi@kes.co.kr

NEUTRAL LINE

N/A

♦ Calculation
QuasiPeak[dBuV] / CAverage [dBuV] = Reading Value[dBuV] + Corr. [dB]
QuasiPeak / CAverage : The Final Value
Reading Value : Not shown in the table.
Corr. : Correction values (LISN FACTOR + (Cable Loss + Pulse Limiter FACTOR))

This report shall not be reproduced except in full, without the written approval of KES Co., Ltd.
The results shown in this test report refer only to the sample(s) tested unless otherwise stated.
The authenticity of the test report, contact shchoi@kes.co.kr

Radiated Electric Field Emissions(Below 1 ㎓)

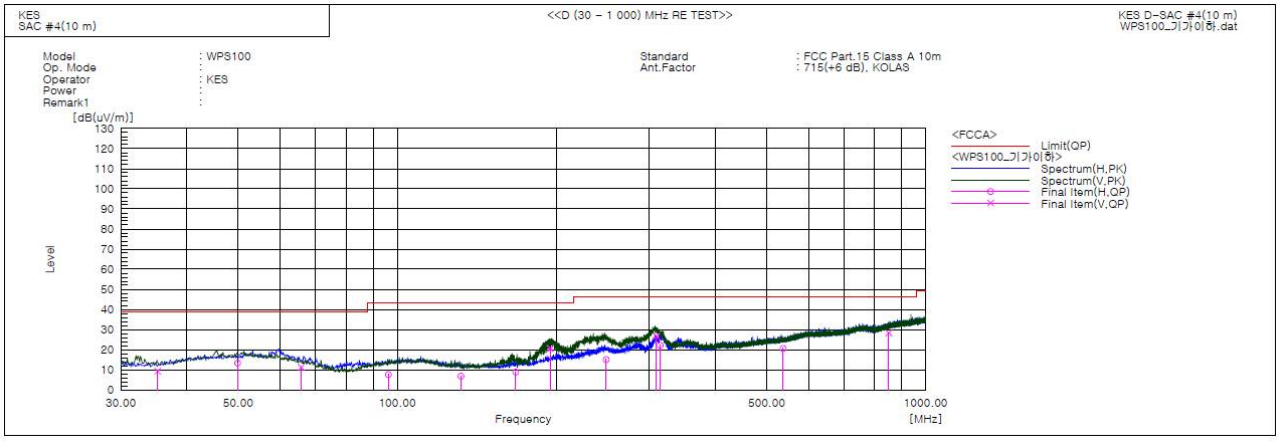

Final Result

No.	Frequency [MHz]	(P)	Reading QP [dB(uV)]	c.f [dB(1/m)]	Result QP [dB(uV/m)]	Limit QP [dB(uV/m)]	Margin QP [dB]	Height [cm]	Angle [deg]	Remark
1	35.213	V	33.8	-24.4	9.4	39.0	29.6	100.0	352.0	
2	49.885	H	33.7	-20.4	13.3	39.0	25.7	189.0	20.0	
3	65.769	V	33.9	-22.7	11.2	39.0	27.8	100.0	22.0	
4	96.203	H	29.9	-22.3	7.6	43.5	35.9	291.0	110.0	
5	131.971	H	30.8	-24.0	6.8	43.5	36.7	400.0	350.0	
6	167.619	H	31.5	-22.7	8.8	43.5	34.7	251.0	353.0	
7	194.658	V	40.2	-19.6	20.6	43.5	22.9	100.0	295.0	
8	248.493	H	32.3	-17.2	15.1	46.5	31.4	400.0	24.0	
9	309.239	V	41.8	-15.1	26.7	46.5	19.8	100.0	147.0	
10	314.574	H	37.0	-14.8	22.2	46.5	24.3	400.0	12.0	
11	537.189	H	28.2	-7.6	20.6	46.5	25.9	400.0	352.0	
12	851.226	V	28.8	-0.5	28.3	46.5	18.2	143.0	58.0	

<u>it was determined that X orientation was worst-case orientation; therefore, al final radiated testing was performed with the EUT in X orientation.</u>

♦ Calculation – SAC #4(10 m)
Result(QP) [㏈(㎶/m)] = (Reading(QP)[㏈(㎶)] + c.f[㏈(1/m)]
Margin(QP)[㏈] = Limit[㏈(㎶/m)] - Result(QP) [㏈(㎶/m)]
Reading(QP) : Reading value, Result(QP) : Reading value + Factor value
Limit(QP) : Limit value, c.f : (ANT Factor + Cable Loss - Preamp Factor), Margin: Margin value

This report shall not be reproduced except in full, without the written approval of KES Co., Ltd.
The results shown in this test report refer only to the sample(s) tested unless otherwise stated.
The authenticity of the test report, contact shchoi@kes.co.kr

Radiated Electric Field Emissions(Above 1 ㎓)

- (1 ~ 6) ㎓

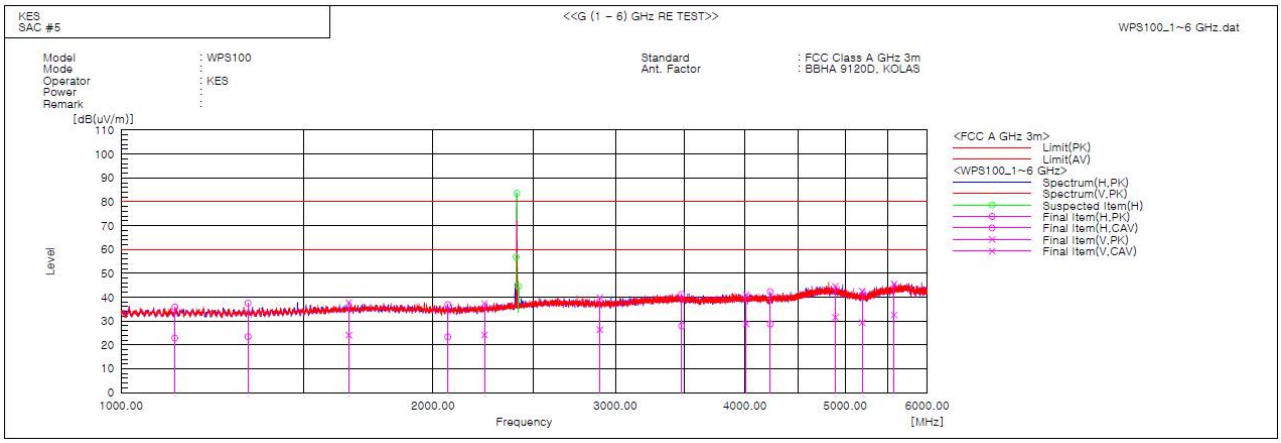

Final Result

No.	Frequency [MHz]	(P)	Reading PK [dB(uV)]	Reading CAV [dB(uV)]	c.f [dB(1/m)]	Result PK [dB(uV/m)]	Result CAV [dB(uV/m)]	Limit PK [dB(uV/m)]	Limit AV [dB(uV/m)]	Margin PK [dB]	Margin CAV [dB]	Height [cm]	Angle [deg]	Remark
1	1126.875	H	43.0	30.1	-7.2	35.8	22.9	80.0	60.0	44.2	37.1	100.0	113.1	
2	1326.250	H	43.7	29.7	-6.2	37.5	23.5	80.0	60.0	42.5	36.5	100.0	187.5	
3	1658.774	V	42.4	28.8	-4.7	37.7	24.1	80.0	60.0	42.3	35.9	241.0	213.2	
4	2066.876	H	40.1	26.5	-3.2	36.9	23.3	80.0	60.0	43.1	36.7	400.0	197.8	
5	2243.116	V	40.0	26.8	-2.6	37.4	24.2	80.0	60.0	42.6	35.8	100.0	219.5	
6	2898.157	V	39.8	26.4	0.0	39.8	26.4	80.0	60.0	40.2	33.6	109.0	313.7	
7	3477.074	H	40.4	27.1	0.8	41.2	27.9	80.0	60.0	38.8	32.1	349.0	304.5	
8	4012.719	V	38.7	26.6	2.2	40.9	28.8	80.0	60.0	39.1	31.2	100.0	158.1	
9	4232.121	H	39.3	25.8	3.0	42.3	28.8	80.0	60.0	37.7	31.2	400.0	213.6	
10	4891.207	V	38.9	25.9	5.7	44.6	31.6	80.0	60.0	35.4	28.4	100.0	289.6	
11	5192.511	V	36.4	23.2	6.1	42.5	29.3	80.0	60.0	37.5	30.7	119.0	115.5	
12	5572.714	V	38.7	25.6	6.9	45.6	32.5	80.0	60.0	34.4	27.5	100.0	310.7	
13	2406.875	H	--------	--------	-2.0	--------	--------	80.0	60.0	--------	--------	400.0	254.6	
14	2409.375	H	--------	--------	-2.0	--------	--------	80.0	60.0	--------	--------	400.0	99.1	
15	2419.375	H	--------	--------	-2.0	--------	--------	80.0	60.0	--------	--------	400.0	316.1	

* Exclusion bands

- Fundamental Frequency : 2.4 ㎓ Band

This report shall not be reproduced except in full, without the written approval of KES Co., Ltd.
The results shown in this test report refer only to the sample(s) tested unless otherwise stated.
The authenticity of the test report, contact shchoi@kes.co.kr

- (6 ~ 12.5) GHz

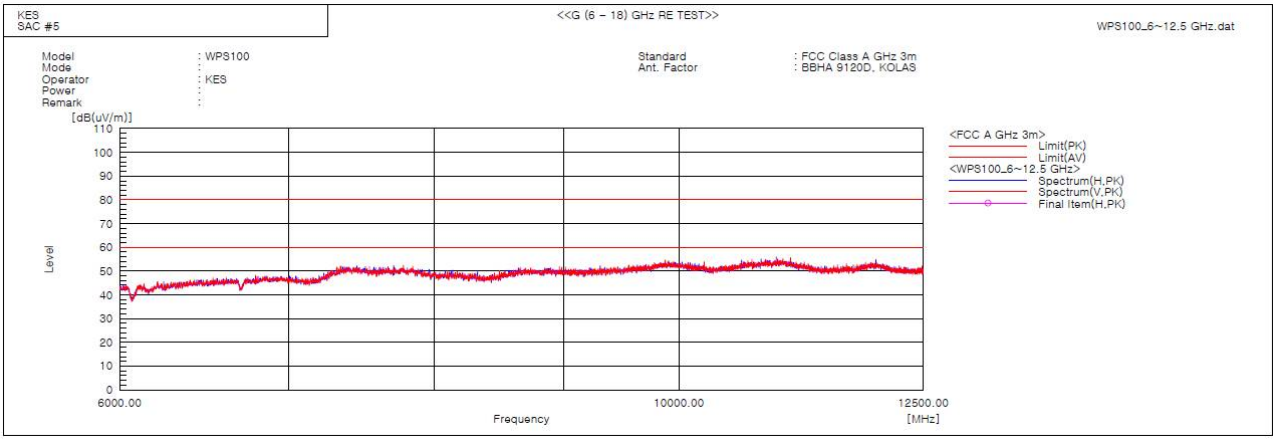

–The fundamental of the EUT was investigated in three orthogonal orientations X,Y and Z

- it was determined that X orientation was worst-case orientation; therefore, al final radiated testing was performed with the EUT in X orientation

♦ Calculation

Result(PK/CAV) [dB(μV/m)] = (Reading(PK/CAV)[dB(μV)] + c.f[dB(1/m)]

Margin(PK/CAV)[dB] = Limit[dB(μV/m)] - Result(PK/CAV) [dB(μV/m)]

Reading(PK/CAV) : Reading value, Result(PK/CAV) : Reading value + Factor value

Limit(QP) : Limit value, c.f : (ANT Factor + Cable Loss - Preamp Factor), Margin: Marjin value

This report shall not be reproduced except in full, without the written approval of KES Co., Ltd.
The results shown in this test report refer only to the sample(s) tested unless otherwise stated.
The authenticity of the test report, contact shchoi@kes.co.kr