ATOM

USER **MANUAL**

VERSION: #COMPLIANCE

DATE OF ISSUE: 02/12/21

XYZ™

BUILD IT RIGHT, FIRST TIME.

ATOM

USER MANUAL

VERSION: #XYZ-72-01
DATE OF ISSUE: 02/12/21

BUILD IT RIGHT, FIRST TIME.

TABLE OF CONTENTS

SYSTEM OVERVIEW

03 ENSURE YOU MANUAL IS UP-TO-DATE

04 IMPORTANT SAFETY INFORMATION

07 WHAT'S IN THE BAG

HARD HAT

10 INTERNAL BATTERY OPERATION

11 HARD HAT PRE-OPERATION PREP

16 POWERING ON & LED DISPLAY

18 ALTERNATIVE POWER SUPPLY

20 ERGONOMIC ADJUSTMENT

25 CHIN STRAP

26 COMFORT MESH REMOVAL

27 LIMITATIONS OF PROTECTION

28 ADDITIONAL PRECAUTIONS

29 HARD HAT APPROVALS

BLUETOOTH KEYBOARD

30 BLUETOOTH KEYBOARD OVERVIEW

31 POWERING ON/OFF

32 CONNECTING THE KEYBOARD

33 CHARGING THE KEYBOARD

CONTROLLER

34 ATOM CONTROLLER

35 CHECKING FOR SOILING

36 REPLACING CONTROLLER BATTERY

XYZ™

TABLE OF CONTENTS

37 POWERING ON/OFF
38 LED INDICATION
39 USING THE TRI-STABLE NOSE
40 CONTROLLER SAFETY INFORMATION

TRACKING BEACON
41 REPLACING BEACON BATTERIES
42 POWERING ON/OFF
43 TRACKING CONFIGURATION
44 USING THE ALTERNATIVE POWER SOURCE

TRIPODS AND QUICK RELEASE
46 UNFOLDING THE TRIPODS
47 ATTACHING THE QUICK RELEASE
48 USING THE BALL HEAD
49 USING THE QUICK RELEASE

CHARGING STATION
51 SETTING UP THE CHARGING STATION
52 POWERING ON/OFF
53 CHARGING THE INTERNAL BATTERIES
54 CHARGING THE EXTERNAL POWER PACK
55 CHARGING STATION SAFETY INFORMATION

TECH SPECS AND GENERAL SAFETY
56 PRODUCT TECHNICAL SPECIFICATIONS
57 IMPORTANT SAFETY & PRODUCT INFORMATION
59 DECLARATIONS OF CONFORMITY

ENSURE YOU MANUAL IS UP-TO-DATE

The products shown in this manual are accurate at the time of writing. However, the products and user manuals may periodically receive hardware and software updates over time to further improve the performance of the system.

Operation of the products should not substantially change but for current instructions please ensure that the user manual (this document) is the most up-to-date version available. The most recent version of this manual is available at **http://xyzreality.com/product/user_manuals** or by contacting your XYZ Reality customer representative.

THIS USER MANUAL IS

VERSION: #XYZ-72-01
DATE OF ISSUE: 02/12/21

Operating your XYZ Reality product with an out of date manual is not recommended. Please ensure the version number above is the most current issue before proceeding.

NOTE

Following an impact on The Atom Hard Hat, please stop using immediately and contact your XYZ Reality Customer Representative.

IMPORTANT SAFETY INFORMATION

These warnings apply to the appliance, and where applicable, to all tools, accessories, chargers or mains adaptors.

Follow these safety instructions when using or handling your Atom hard hat and accessories to reduce the risk of fire, electric shock and injury to persons or property.

Use only as described in this XYZ Reality User Manual. Do not carry out any maintenance other than that shown in this manual or advised by XYZ Reality customer support.

Do not disassemble / customise this product or accompanying accessories in any way.

Always be aware of your environment. Only use the product when the surrounding area is safe and in accordance with existing site risk assessments and procedures.

Use extra care while operating the product without supervision. Objects in augmented reality can appear real and can distract from the real world. Ensure that the working area is clear of any trip hazards.

Use only XYZ Reality approved accessories and replacement parts.

Take care to keep the product dry and in the event of the product and/or any accessory becoming wet, do not use and contact your XYZ Reality customer representative.

Do not use or charge this product within 3 meters of a pool or body of water. Do not use on wet, muddy or greasy surfaces. Do not expose to moisture, rain or snow.

If liquid has been sprayed, splashed or poured on the product, or any component of the product has been dropped or damaged, or the product exhibits any distinct change in performance, disconnect power from product and do not use further. Contact your XYZ Reality customer representative.

Keep the product clean in accordance with the instructions in this user manual. Only clean using non-aggressive cleaning products such as lens cleaner cloth and the microfibre cloth provided in your box.

Do not use a battery pack or appliance that is damaged or modified. Damaged or modified batteries may exhibit unpredictable behaviour resulting in fire, explosion or risk of injury. Do not expose battery pack or appliance to fire or excessive temperatures. Exposure to fire or temperatures above 60°C (140°F) may cause explosion.

NOTE

The Atom is primarily designed to provide protection to the wearer against falling objects and airborne particulates, preventing consequential brain and eye injuries in accordance with harmonized standards EN 397 and EN 166.

Safety performance of the product is assessed using harmonized standard EN 397. The standard mandates testing across a range of temperatures, UV radiation and water exposures.

In each of the tests the force transmitted through the hard hat that is less than 5kN.

The Atom is designed for use in conventional construction sites and should not be used while working from heights.

IMPORTANT SAFETY INFORMATION

The battery is a sealed unit and under normal circumstances poses no safety concerns. In the unlikely event that liquid leaks from the battery, do not touch the liquid as it may cause irritation or burns, and observe the following precautions:

- Skin contact – can cause irritation. Wash with soap and water.
- Inhalation – can cause respiratory irritation. Expose to fresh air and seek medical advice.
- Eye contact – can cause irritation. Immediately wash eyes thoroughly with water for at least 15 minutes. Seek medical attention.
- Disposal – wear gloves to handle the battery and dispose of immediately, following local ordinances or regulations.

Follow all charging instructions and do not charge the battery pack or the appliance outside of the temperature range specified in the instructions. Charging improperly or at a temperature outside of the specified range may damage the battery and increase the risk of fire. To ensure maximum battery life, XYZ Reality recommends the following:

- When not in use, the appliance should be stored at room temperature. Recommended range: -10°C (14°F) to +40°C (104°F).
- The ambient temperature range for operation should be 0°C (32°F) to +40°C (104°F). For charging, the ambient temperature range should be 0°C (32°F) to +40°C (104°F).

NOTE: Proper functionality is not guaranteed when operating outside of the recommended temperature range.

A small portion of the population may experience epileptic seizures when viewing certain kinds of flashing lights or patterns that are commonly present in our daily environment. These persons may also experience seizures while watching some kinds of television pictures or playing certain video games on regular monitors, including the use of a display system such as this. As a result, consult a physician if you have any epileptic condition before using this device or if you experience any of the following symptoms while using this device: altered vision, muscle twitching, other involuntary movements, loss of awareness of your surroundings, mental confusion, and/or convulsions.

Smart glasses can potentially have adverse effects on the user, including: motion sickness, perceptual after effects, disorientation, decreased postural stability, and eye strain. It is recommended to take frequent breaks to lessen the potential of these effects, as is commonly suggested for other items, such as keyboards and computer monitors, that you may tend to fixate or concentrate on. If your eyes show signs of fatigue or dryness or if any of the above symptoms are noted, immediately discontinue use of this device and do not resume using it for at least 30 minutes after the symptoms have fully subsided.

This product may be tethered to a power source or battery and cables may extend between components. Be careful that these cords do not tangle around you or pose a potential threat to the safety of others. Do not pull or yank on the cable, kink any of the cables or tie them in sharp or tight knots.

IMPORTANT SAFETY INFORMATION

Do not drop, strike, or cause any portion of the product to be struck or shaken aggressively. If the appliance is not working as it should, do not use and contact XYZ Reality customer support. EN 166 Safety Warnings

The XYZ Reality Augmented Reality Visor has been certified by the BSI to standard EN 166. Below outlines additional warnings relevant to this BSI standard.

- **Optical class 3 oculars are not intended for long term use**
- **Materials which may come into contact with the wearer's skin could cause allergic reactions to susceptible individuals;**
- **Scratched or damaged oculars should be replaced;**
- **Eye protectors against high speed particles worn over standard ophthalmic spectacles may transmit impacts, thus creating a hazard to the wearer.**
- **If protection against high speed particles at extremes of temperatures is required then the selected eye protector should be marked with the letter T immediately after the impact letter, i.e. FT, BT or AT. If the impact letter is not followed by the letter T then the eye protector shall only be used against high speed particles at room temperature.**

WHAT'S IN THE BAG 1/3

1. Hard Hat
EN 397 / ANSI 789.1
(1x Included in the Box)

2. Comfort Mesh
(1x Included in the box)

3. Cable Halo
(1x Included in the box)

4. AR Visor
(1x Included in the box)

5. Integrated Battery
(1x Included in the box)

6. Optional Chin Strap
(1x Included in the box)

7. Controller
(1x Included in the box)

8. External Battery
(8x Included in the box)

9. Charging Station
(1x Included in the box)

10. Tracking Beacon
(4x Included in the box)

11. Mini Keyboard
(1 x Included in the box)

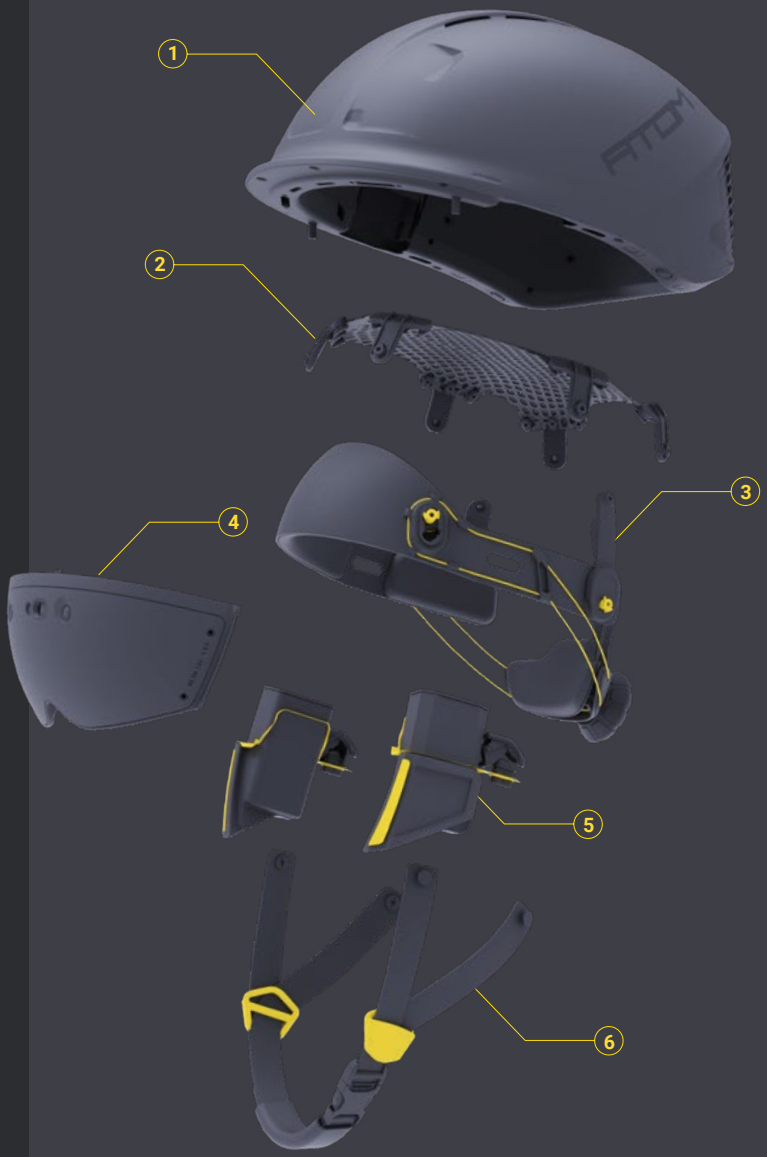

WHAT'S IN THE BAG 2/3

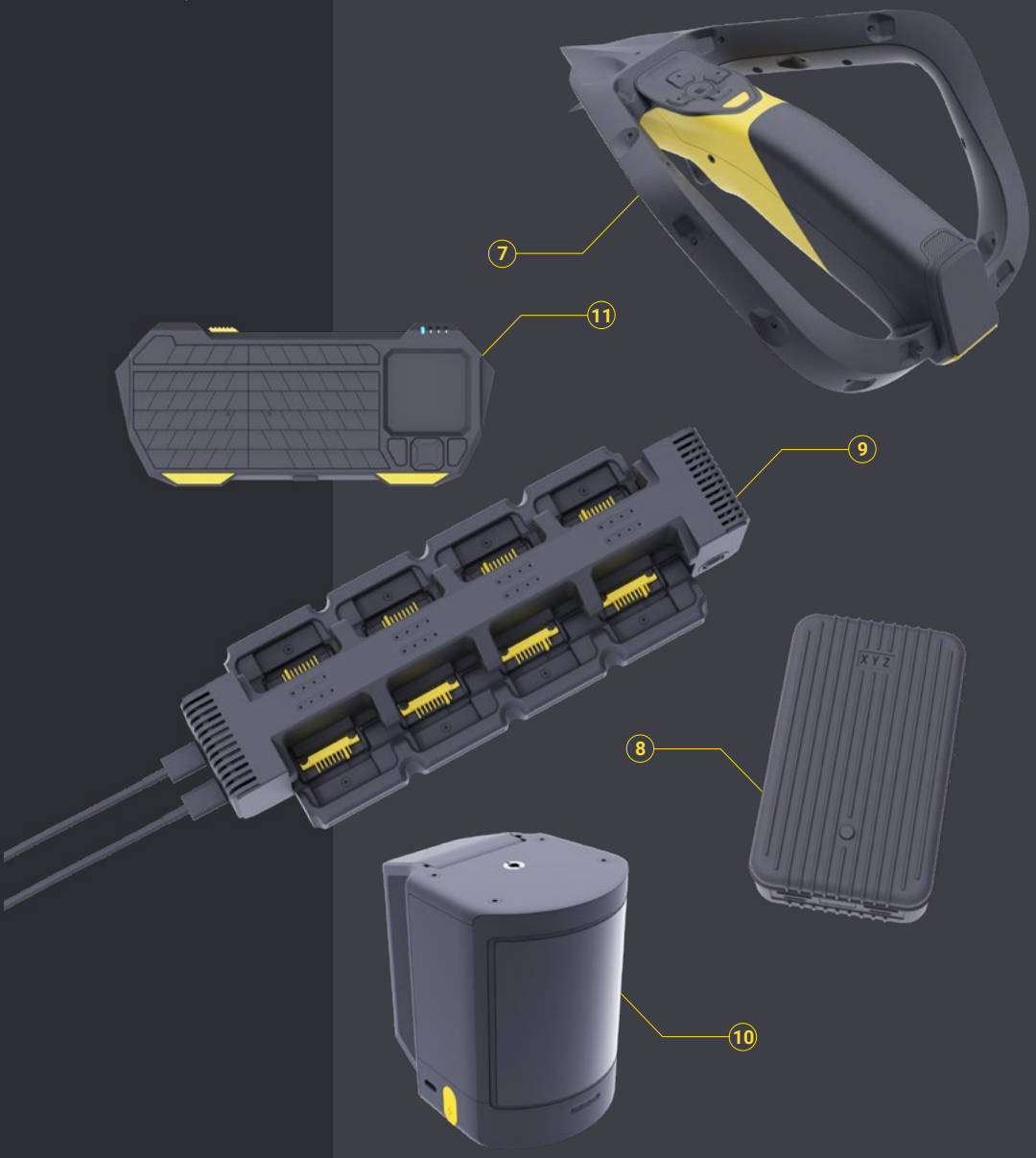

WHAT'S IN THE BAG 3/3

12. USB Cable Type C-C
(1x Included in the Box)

13. USB Cable Type A-C
(1x Included in the box)

14. Tracking Beacon Tripod
(4x Included in the box)

15. Tripod Quick-Release
(4x Included in the box)

16. Tripod Ball-Head
(4x Included in the box)

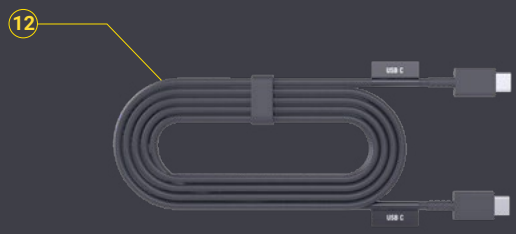

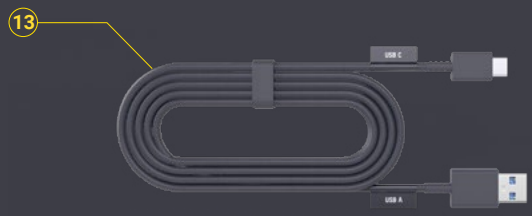

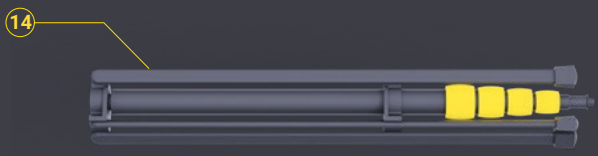

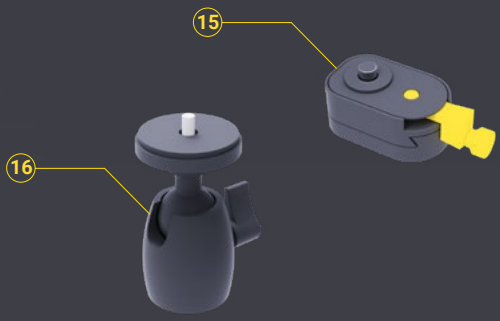

INTERNAL BATTERY OPERATION

Checking the Charge.
Press and hold the Charge State check button on the battery to check the charge status.

Up to four LEDs will illuminate corresponding to the charge remaining in the battery.

NOTE

A battery with 25% LED flashing should not be used before being recharged.

PREPARING THE HARD HAT

Inspecting the Visor and Hard Hat Shell.
Visually inspect the Hard Hat prior to each use for signs of dents, cracks, penetration, and any damage due to impact, rough treatment, or wear that might reduce the degree of protection originally provided. A helmet with worn, damaged or defective parts should be removed from service.

Cleaning the Visor and Hard Hat Shell.
Wipe down front surface of the AR Visor (B) using the microfiber cloth provided in your XYZ Reality case.

The secondary dry wipe cloth can be used on the Outer Shell (A). Ensure all reflective windows are clean and free from dirt or dust collected on site.

Do not apply chemical or liquid cleaners directly to the Visor and Hard Hat Shell or use abrasive materials.

Only clean using non-aggressive cleaning products such as lens cleaner cloth and the microfiber cloth provided in your box.

USE OF THE INTERNAL BATTERIES

Replacing the Batteries.
Remove the battery wings from the Hard Hat using the battery wing release buttons (A).

Check that your internal battery packs are charged using the battery check button (B).

Insert the internal battery pack into each wing and reinsert into the hard hat until a positive click is felt indicating the wing is locked.

NOTE

Internal battery contact pins should be checked and free of moisture and dust before being inserted into the Hard Hat. Wet/Soiled contact may cause damage to your Atom.

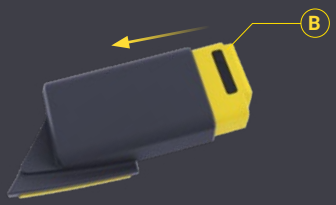

ADJUSTMENT OF THE NAPE SUPPORT

Adjusting nape tension.
Use rotary ratchet dial at the back of your hard hat to adjust the size of the halo.

This hard hat conforms to a head size range of 52cm - 62cm.

CHECKING EYE ALIGNMENT

Checking Eye Line.
Position hard hat onto your head, ensure the centre of the lenses of the AR visor line up with the centre of your eyes.

Tighten ratchet strap accordingly.

READY TO GO ON SITE

Final Checks.
Make sure everything is set up as shown here and that you have followed your construction site's health and safety procedures before heading out on site.

NOTE

If using the External Battery Module (A) this can be worn on either side of the hip. The battery cable should wrap around the back of the waist.

If using internal batteries, the external battery module is not required.

To use external battery, see page 18.

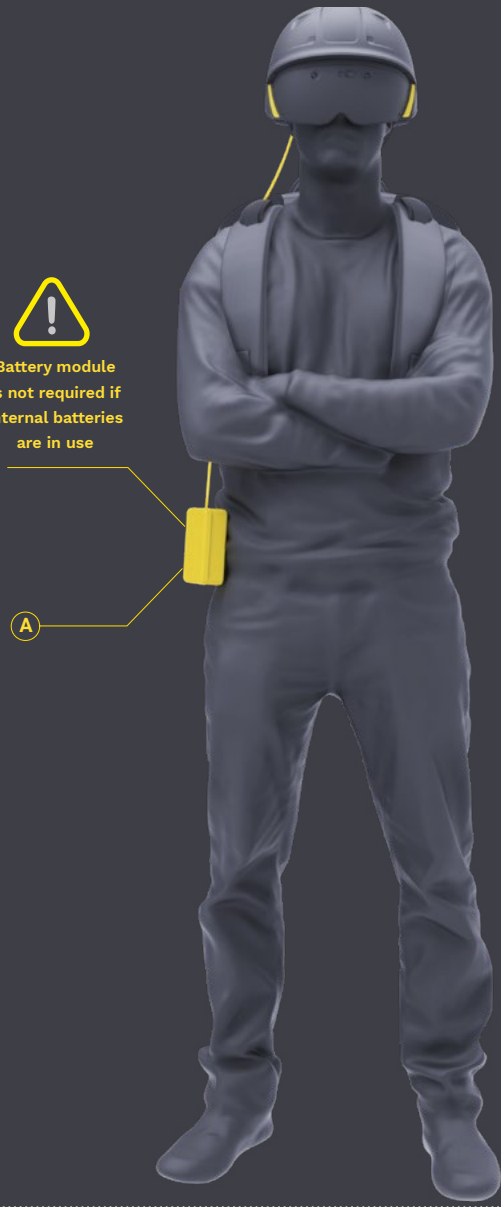

POWER ON

To power on your device, **press and hold** either the left or right side power button for **3 seconds.**

ATOM HARD HAT LED INDICATION

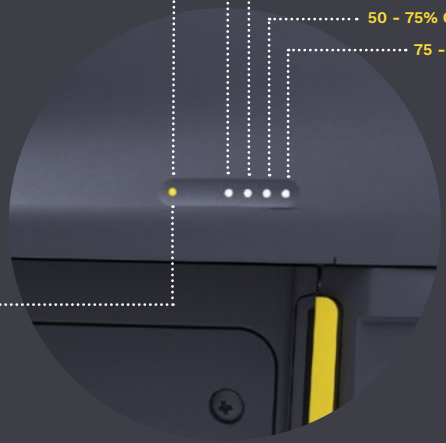

	OFF	Hard Hat Powered OFF
	SOLID YELLOW	Hard Hat Starting Up
	SLOW BLINK RED	Firmware Upgrade DO NOT UNPLUG
	SOLID RED	System Stop Error
	SLOW BLINK BLUE	Wi-Fi Connecting
	FAST BLINK BLUE	Wi-Fi Cloud Syncing
	SOLID BLUE	System Powered up & Ready

USING THE ALTERNATIVE POWER PACK

Plugging In.
If you do not have internal batteries available, the external power pack can be used as an alternative power source.

Take out the XYZ Reality provided USB Type-C cable and plug into the back of the hard hat.

Both the left and right USB Type-C ports can be used to power the hard hat.

Only use XYZ Reality supplied USB Type-C cables. Do not use alternative cables.

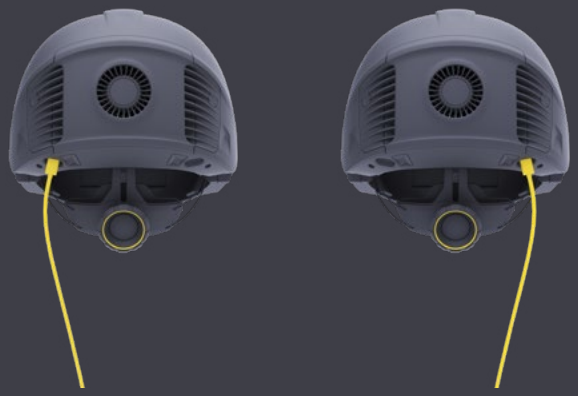

USING THE ALTERNATIVE POWER PACK

Connecting the pack.
Plug you hard hat into the 100 Watt USB C port of the XYZ Reality External Battery Module (A), using the other end of the USB Type-C cable.

Powering up.
Before attempting to power on the hard hat, press the power button (B) on the external battery to activate it. The digital display (C) will show the remaining battery percentage - if it does not illuminate, you must charge the power pack before use.

NOTE

This step is only necessary if not using the XYZ Reality internal battery packs.

Do not use the 60 Watt USB-C port to power The Atom hard hat.

ERGONOMIC ADJUSTMENT

Comfort Foam

The foam pads (A,B,C,D) are washable. It is recommended to wash foam pads once every week.

The comfort foam on the halo (E) can be detached by peeling back against the VELCRO™ back.

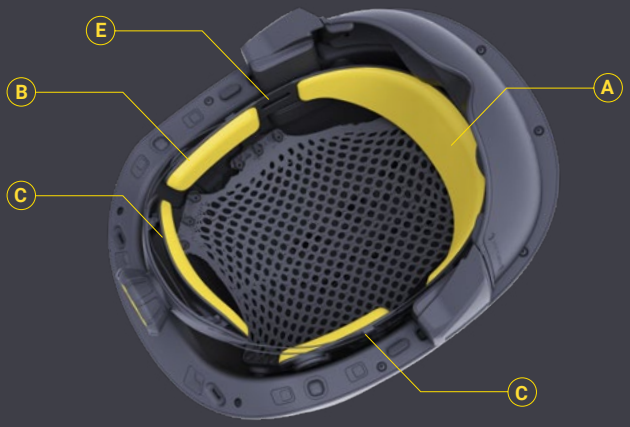

ERGONOMIC ADJUSTMENT

Comfort Foam

The Atom headset will come preinstalled with a 10mm (M) thick front forehead comfort foam.

Additional 15mm for smaller heads (S) and 5mm for larger heads (L) swappable front forehead comfort foam is provided for better individual fit.

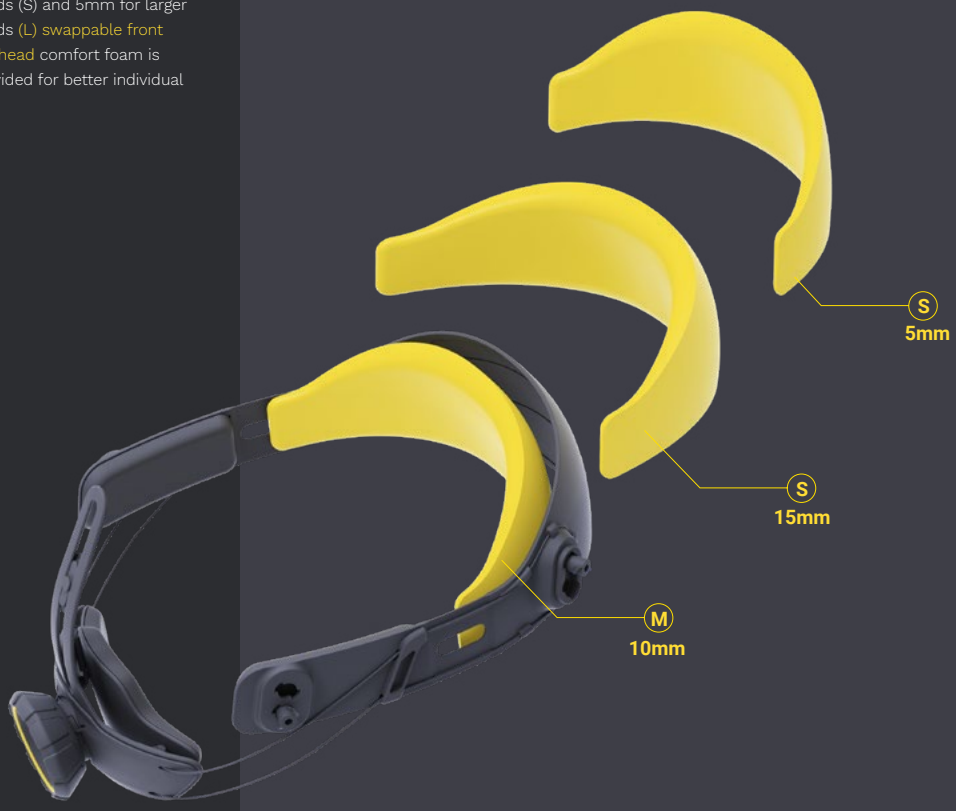

ADDITIONAL SIZE ADJUSTMENT STEPS

Removing the Halo

The Halo (E) can be swapped out and replaced if required to further support hygiene requirements of a site.

To do so first twist and then pull the 4 connection pins (A,B,C,D) located under the 4 comfort foam pads.

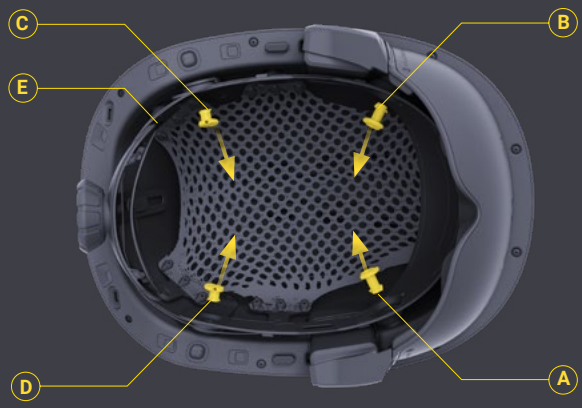

ADDITIONAL SIZE ADJUSTMENT STEPS

Height adjust (1 of 2)
For larger head forms, the internal wearing height of the hard hat can be adjusted.

To adjust the wearing height of your hard hat, first remove the halo (E).

The halo (E) can be disconnected from the hard hat by the 4 connection pins (A,B,C,D) highlighted in the top image.

Rotate and twist out the pins with a light force to pop out the cradle from each of the connection tabs.

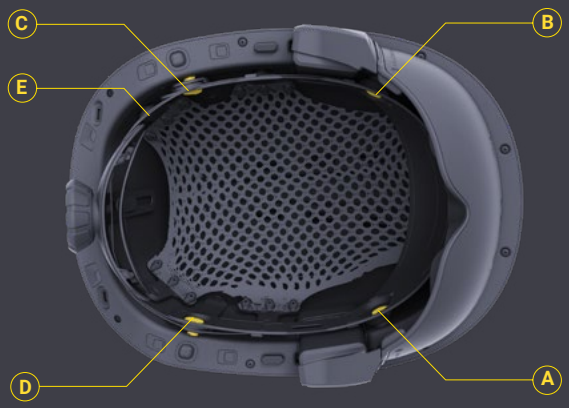

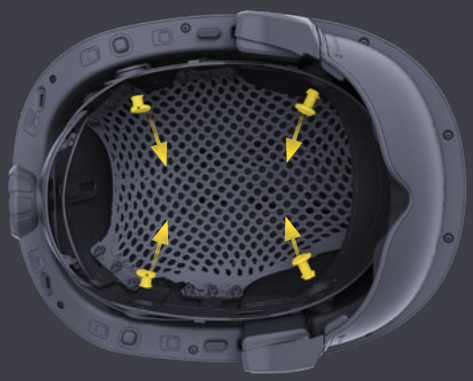

ADDITIONAL SIZE ADJUSTMENT STEPS

Height adjust (2 of 2).
Lower the halo (E) by 10mm and reconnect the 4 connection pins into the top hole of the Halo.

Insert each pin (A,B,C,D) and gently twist until you feel a small click, this indicates that the pin is correctly inserted and locked.

NOTE

Take care when performing these steps, Incorrectly installing the halo, or failure to correctly lock the pins may compromise the safety of the hard hat

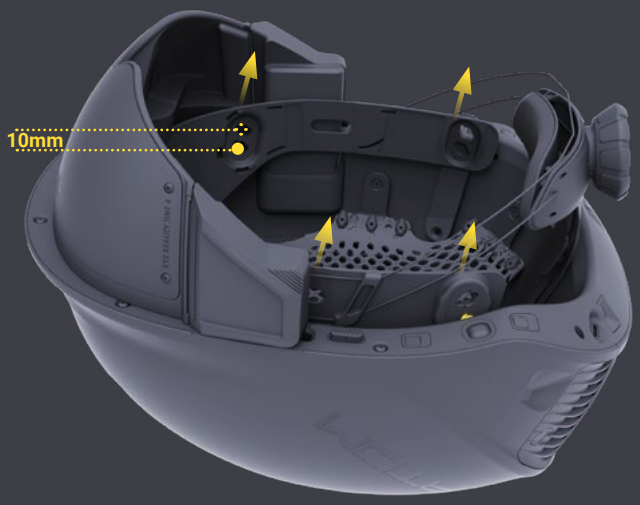

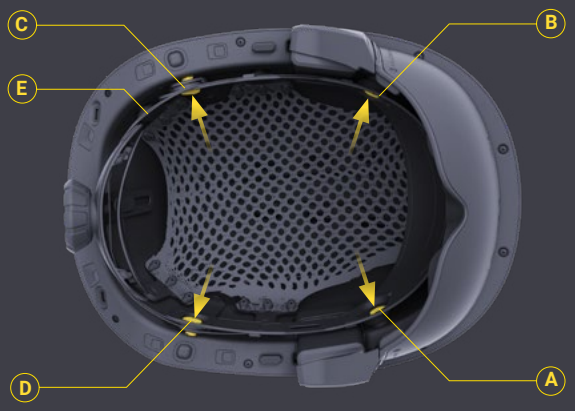

CHIN STRAP

Chin strap removal.
The chin strap (D) can be removed by hand through 4 thumb screws.

Step 1.
First remove the halo as demonstrated on page 15.

Step 2.
Unscrew the 4 thumb screws (C) that connect the chin straps (D) to the inner shell of the hard hat (1).

Step 3.
Remove chin strap and replace thumb screws back into the inner shell of the hard hat (E).

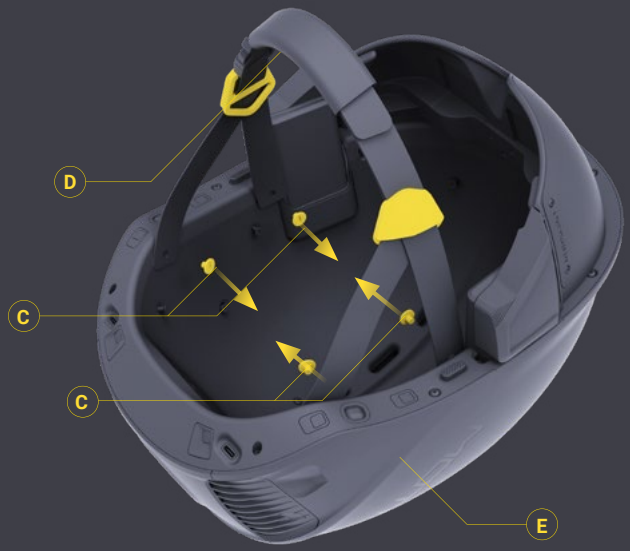

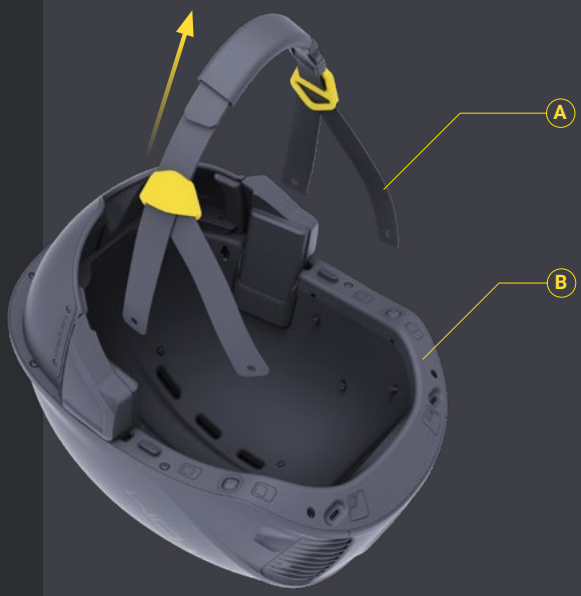

COMFORT MESH REMOVAL

Comfort mesh.
Remove the comfort mesh (B) by un-clipping each side from the T-Shaped hooks (A) around the internal perimeter of the hat.

The comfort mesh (B) can then be washed and used by each individual user.

WASHABLE

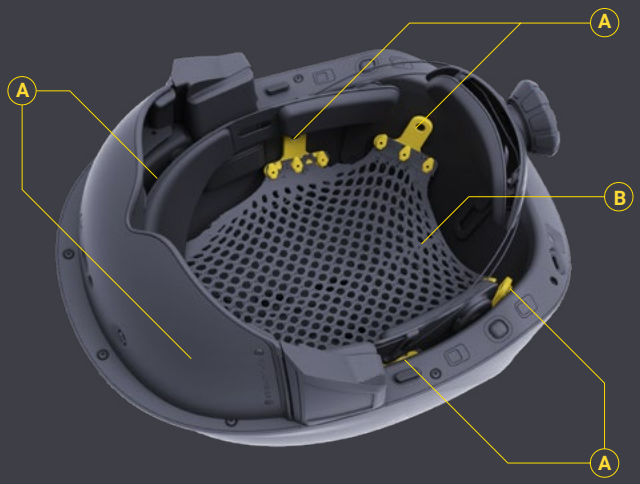

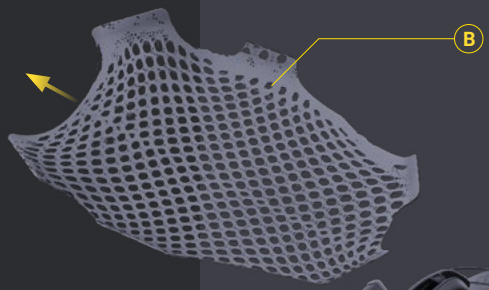

LIMITATION OF PROTECTION

Safety awareness.
Users are cautioned that if unusual conditions prevail (for example, higher or lower extremes of temperature than those described), or if there are signs of abuse of or damage to the helmet or of any component, the degree of protection may be reduced. Any helmet that has received an impact should be removed from service, since the impact may have substantially reduced the ability of the helmet to continue to offer protection.

NOTE

Certain helmet materials may be susceptible to damage from ultraviolet light and chemical degradation. Periodic examinations should be made of all protective helmets and, in particular, those worn or stored in areas exposed to sunlight for long periods. Ultraviolet degradation may first manifest itself in a loss of surface gloss, called chalking or discoloration. Upon further degradation, the surface will craze or flake away, or both. At the first appearance of any of these phenomena, the shell should be replaced.

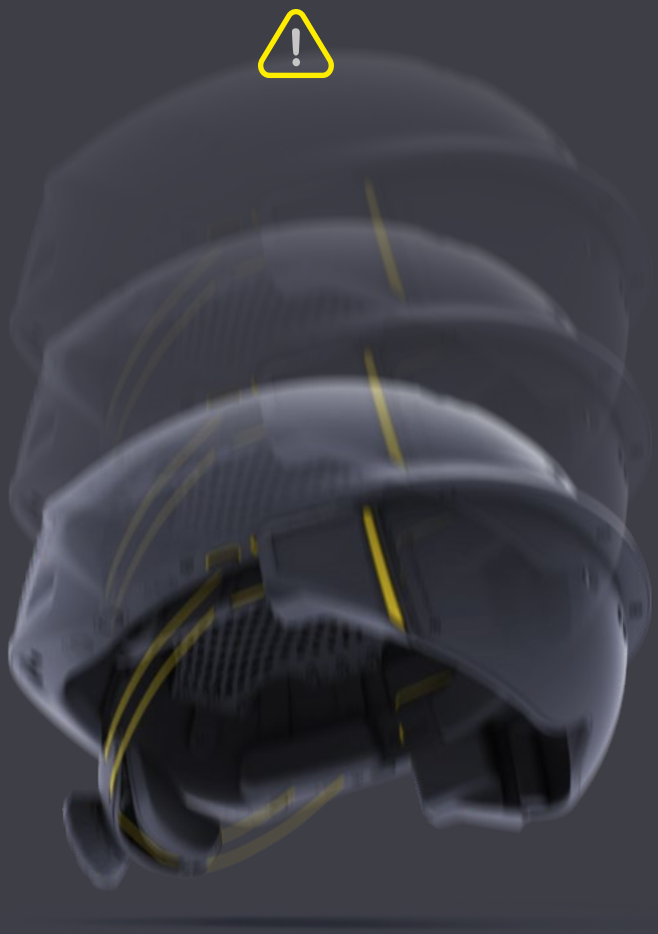

ADDITIONAL PRECAUTIONS

Because the Hard Hat can be damaged, they should not be abused. They should be kept free from abrasions, scrapes, and nicks and should not be dropped, thrown, or used as supports. This applies especially to helmets that are intended to afford protection against electrical hazards.

The Hard Hat should not be stored or carried on the rear window shelf of an automobile, since sunlight and extreme heat may cause degradation that will adversely affect the degree of protection they provide. Also, in the case of an emergency stop or accident, the helmet might become a hazardous impactor.

Users should exercise care in the selection and installation of additional accessories. Any additional accessories to the helmet may adversely affect the level of protection. The user should make sure that any accessory is compatible with the helmet. Contact the helmet or accessory manufacturer for compatibility information.

Users should never alter or modify the helmet (e.g. drill, glue, cut, etc.) to accept accessories unless instructed to do so by the helmet manufacturer. Helmet decorations should not be used to obscure dents, cracks, non-manufactured holes, other penetrations, burns or other damages.

Manufacturer details.

XYZ REALITY LTD.
Goswell Road
Angel,
Clerkenwell,
EC1V 7LQ
UNITED KINGDOM

Notified body details.

BSI Group The Netherlands B.V.
Say Building
John M. Keynesplein 9,
1066 EP, Amsterdam
Country : Netherlands

Notified body number.

2797

THE RECOMMENDED SHELF LIFE OF THIS PRODUCT IS **1 YEAR**.

DO NOT ATTEMPT TO REPLACE PARTS WITH OUT CONSULTING MANUFACTURER.

HARD HAT APPROVALS

The XYZ Reality Atom hard hat has been tested and approved by BSI, conforming to the European standards of EN 397 and EN 166 for health and safety compliance.

The European Standard EN 397 specifies physical and performance requirements for industrial safety helmets. The mandatory requirements apply to helmets for general use in industry. Industrial safety helmets are intended primarily to provide protection to the wearer against falling objects and consequential brain injury and skull fracture.

The European Standard EN 166 specifies functional requirements for various types of personal eye-protectors used against various hazards, as encountered in industry, laboratories, educational establishments, DIY activities, etc. which are likely to damage the eye or impair vision, with the exception of nuclear radiation, X-rays, laser beams and low temperature infrared (IR) radiation emitted by low temperature sources.

EN 166 Classes of Protection: **XYZ REALITY 1 EN 166**

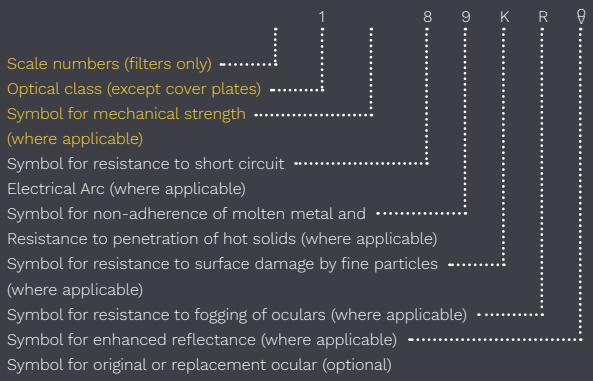

In addition, the ocular marking may include a mark to assist correct fitting of laminating oculars.

Symbol	Mechanical Strengh Requirement
No Symbol	Minimum robustness
S	Increased robustness
F	Low energy impact
B	Medium energy Impact
A	High energy impact

BLUETOOTH KEYBOARD OVERVIEW

1. Keyboard
keyboard for interacting with the hard hat outside of the atom software

2. Mouse touch-pad

3. Keyboard keys

4. Power switch

5. Function buttons

6. Status leds

7. D-pad

8. Micro usb port

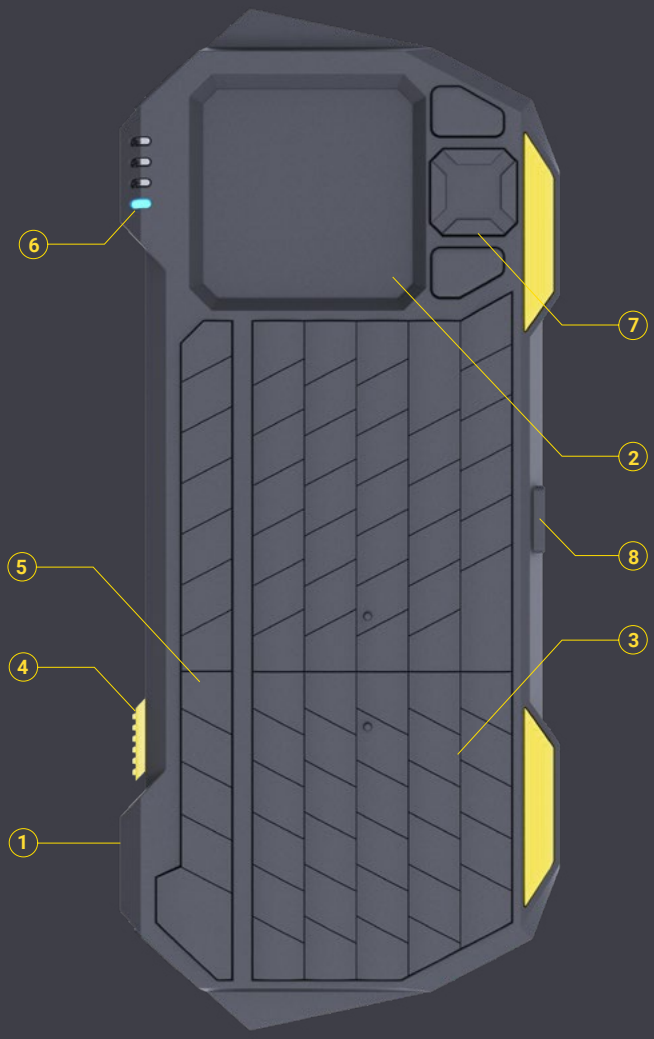

POWERING THE KEYBOARD ON/OFF

Powering on.
To turn on the keyboard, slide the top slider (A) into the "ON" position (B).

When turned on, the power/ bluetooth LED (C) should illuminate with a solid blue light.

Powering off.
To turn off the keyboard, slide the top slider (A) into the "OFF" position.

NOTE

If the keyboard power LED does not illuminate, the keyboard may need charging. Please refer to the 'Charging the Keyboard' page for details.

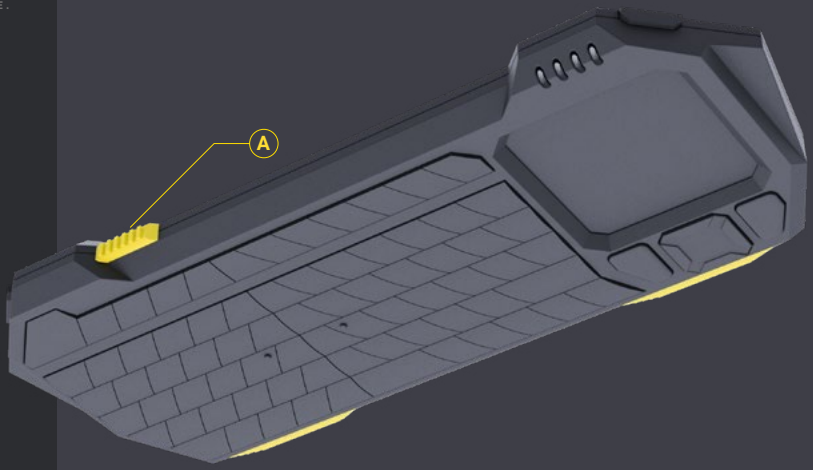

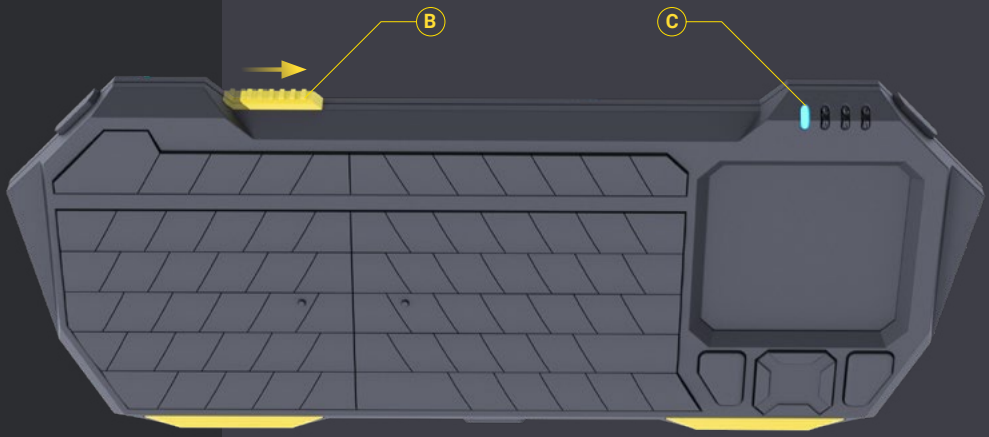

RECONNECTING THE KEYBOARD

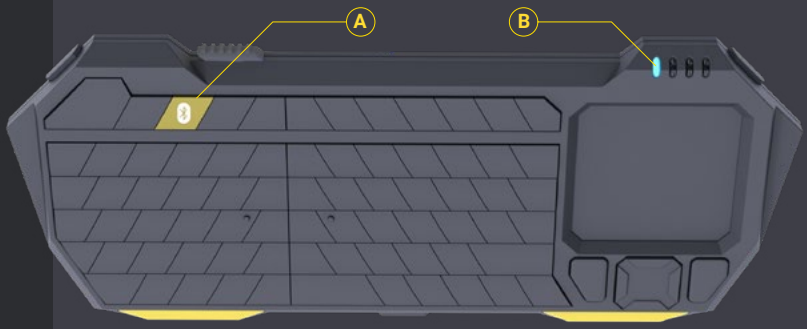

Only perform this step if asked to do so:
Each keyboard supplied comes pre-configured to its hard hat, please do not attempt to re-pair the keyboard unless instructed to do so by an XYZ Reality representative.

Bluetooth pairing.
To activate pairing mode, press the bluetooth button on the top row of the keyboard. (A)

When pairing mode is active the power/bluetooth LED will constantly flash blue. (B)

You can pair the hard hat with the keyboard from within The Atom software.

CHARGING THE KEYBOARD

Plugging in power.
To charge the controller, plug the a compatible Micro USB cable (B) into the Micro USB charging port on the bottom of the keyboard (A).

Plug the other end of the cable into the power output port of The Atom's external power pack and push the button on the power pack to activate it.

Alternatively, the keyboard can be charged via any compatible USB-A port.

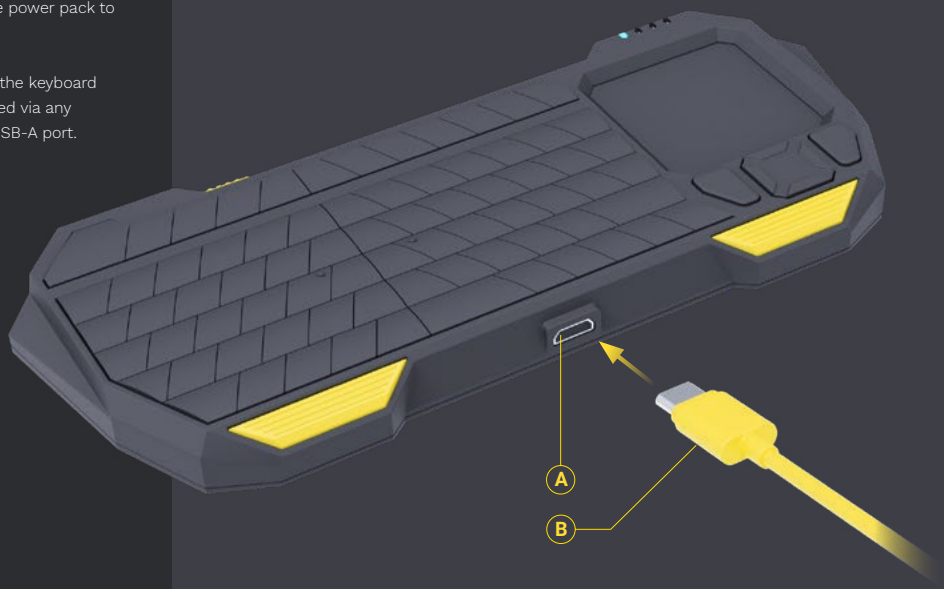

ATOM CONTROLLER

1. **Atom controller**
controller for interacting with the atom

2. **Status panel**

3. **Input pad**

4. **Power button**

5. **Trigger (underside)**

6. **Internal battery**

7. **Battery door**

CHECKING FOR SOILING

Checking for Dirt.
Before using the controller, check all surfaces for dust or dirt covering the sensor surfaces.

Dirt or dust covering these sensors could negatively affect the accuracy and precision of the system and compromise effective operation of The Atom.

Cleaning Dirt.
Only use clean microfiber cloths to gently remove loose dirt and dust from the controller. Do not apply chemical or liquid cleaner directly to the controller surfaces, or use abrasive materials.

NOTE

If the level of soiling is such that the controller cannot be effectively cleaned, or has become physically damaged do not attempt to use the controller and seek a replacement.

REPLACING CONTROLLER BATTERY

Remove Battery Door.
Release the battery door (A) latch and pull the door out of the controller body.

Insert Battery.
Insert a charged battery into the controller body (B).

Replace Battery Door.
Push the battery door back into the body (C) until the latch clicks down and the door is locked in place.

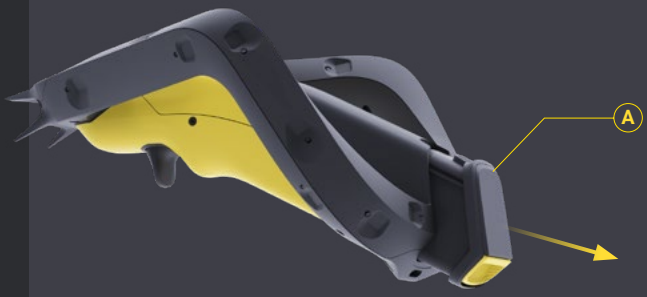

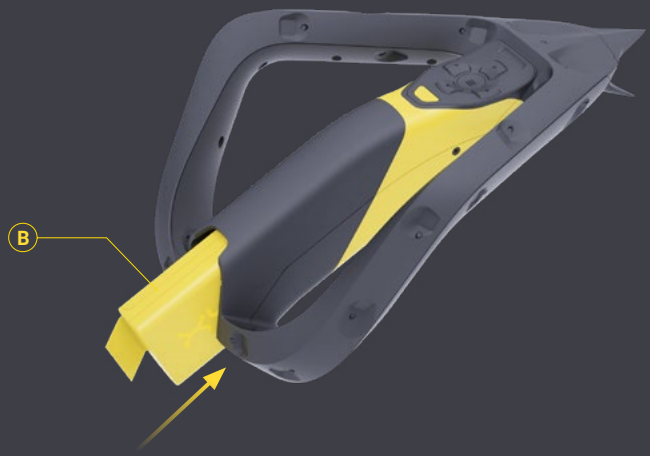

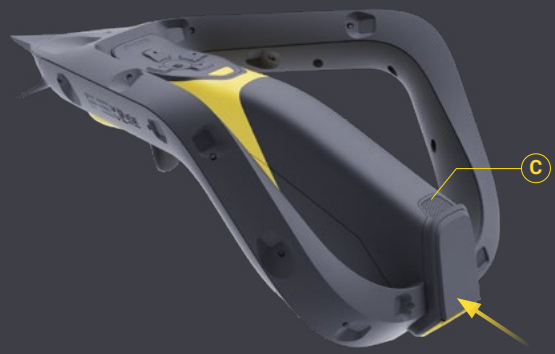

POWERING ON/OFF THE CONTROLLER

Powering ON.
Press and hold the power button (A) on the controller, the status LED should illuminate (B).

Powering OFF.
To power OFF the controller, please press and hold the power button (A) for 2 seconds. The LEDs will switch off when the controller powers OFF.

NOTE

If the controller does not power on when the button is pressed, please check the battery is charged. If the controller still does not power on please contact customer support.

CONTROLLER LED INDICATION

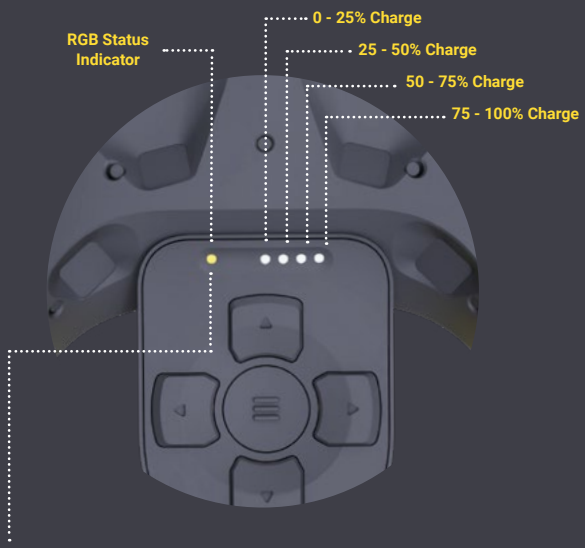

	OFF	Controller Powered OFF
	SOLID RED	Controller Initialising
	BLINK RED	Firmware update DO NOT UNPLUG
	SOLID GREEN	Ready - USB Connected
	BLINK BLUE	Wireless Connecting
	SOLID BLUE	Ready - Wireless Connected

USING THE TRI-STABLE NOSE

Stabilising.
When touching-on retromarkers during calibration, first place the two stability legs (A) onto the surface just below the retromarker.

Touching-on.
Once stable, gently roll the tip into the centre of the retromarker (B) then hold in place and calibrate the marker's position (as instructed in The Atom's augmented reality interface). If the tip does not touch dead-centre reposition the stability legs and retry.

Sharp Edges
Do Not Touch

CONTROLLER SAFETY INFORMATION

Class 2 Laser Radiation Warning

The Atom Controller is a Class 2 laser product. Appropriate caution should be taken when using the product on-site and around other people.

- **Never deliberately stare directly into the laser beam**
- **Class 2 lasers can cause flash-blinding. Never aim the laser at any people, vehicles, aircraft or plant operators**
- **If eye exposure to the laser occurs, immediately stop use of the system and seek medical advice.**

Sharp Edges
Do Not Touch

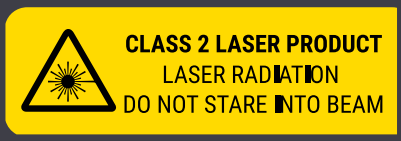

- **Do not open or attempt to open or service the controller, there are no user serviceable components inside.**

REPLACING BEACON BATTERIES

Step 1.
Slide the battery door release (A) to open the battery compartment cover.

Step 2.
Insert a charged XYZ Reality internal battery into the battery compartment.

Step 3.
Close the battery door until the release button (B) clicks closed and locked.

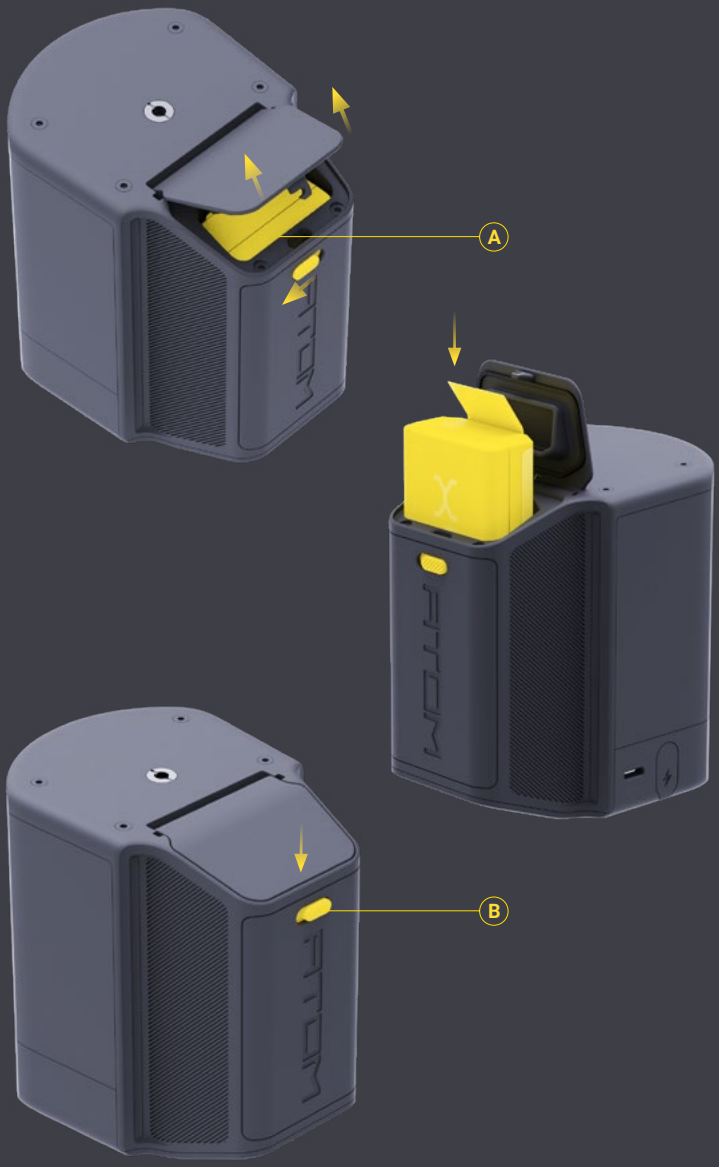

POWERING ON/OFF THE BEACON

Powering ON.
Press and hold the power button (A) on the beacon, the LCD display (B) and the battery LEDs (C) should illuminate (if external power is in use these LEDs will not illuminate).

Powering OFF.
To power OFF the beacon, please press and hold the power button (A) for 2 seconds. The LEDs and display will switch off when the beacon powers OFF.

Battery Level.
When powered on, the four frontal LEDs will display battery remaining.

NOTE
If the tracking beacon does not power on when the button is pressed, please check the battery is charged. If the tracking beacon still does not power on please contact customer support.

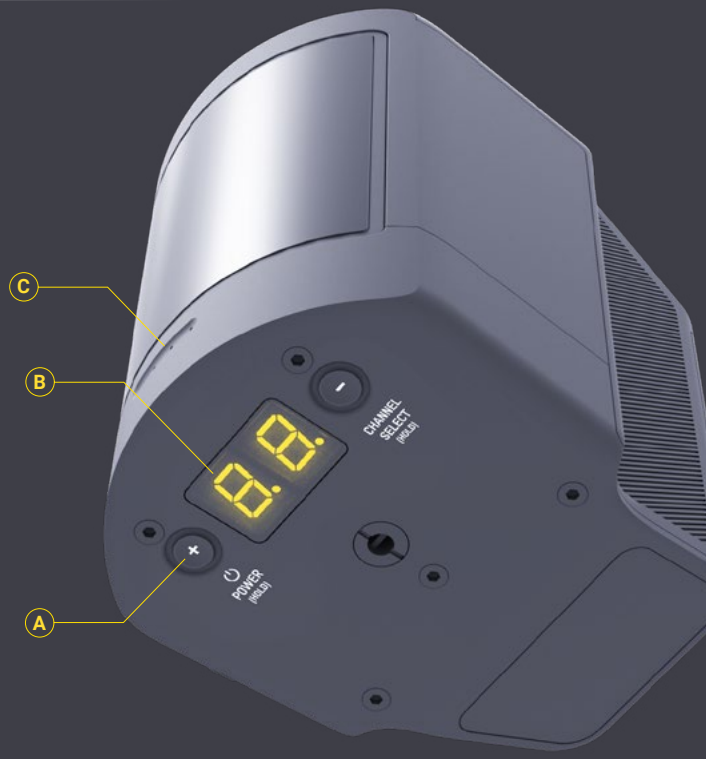

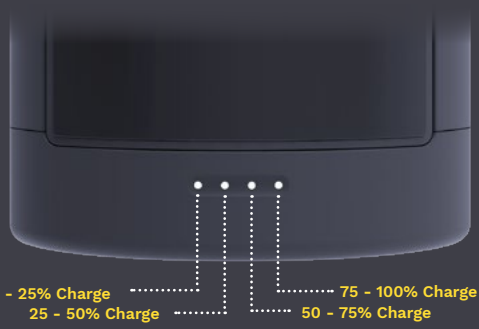

SELECTING TRACKING CHANNELS

All Tracking Beacons covering a given tracking zone must each be set to **different channel (example below)**
*Available channel range: 01 - 16

Depending on the use case, the tracking beacons will need to be in different channels.

Activating Channel Mode.
Press and hold the channel select button (B) for two seconds. The display will indicate the current channel selection.

Select Channel.
Once the changing mode is active, push the + or - buttons (A & B) to select the operating channel of the tracking beacon.

Confirm Channel.
Press and hold the channel select button (B) for two seconds to confirm channel selection.

CLEARING TRACKING ERRORS

Power OFF.
To clear errors, first power OFF the beacon, please press and hold the power button (A) for 2 seconds. The LEDs and digital display will switch off when the beacon powers OFF.

Remove Power Sources.
Remove all batteries and DC power input from the tracking beacons and wait 5 seconds.

Power ON.
Reconnect chosen power source & then press the power button (A) on the beacon, the LCD display (B) and the battery LEDs (C) should illuminate.

Error Clear?
If the Error code returns when the unit is powered on again, please power off the units and contact customer support.

If the tracking beacon displays an error code in the image it must be restarted to reset it's tracking

Error codes are displayed in the image as the letter E followed by a number as shown below

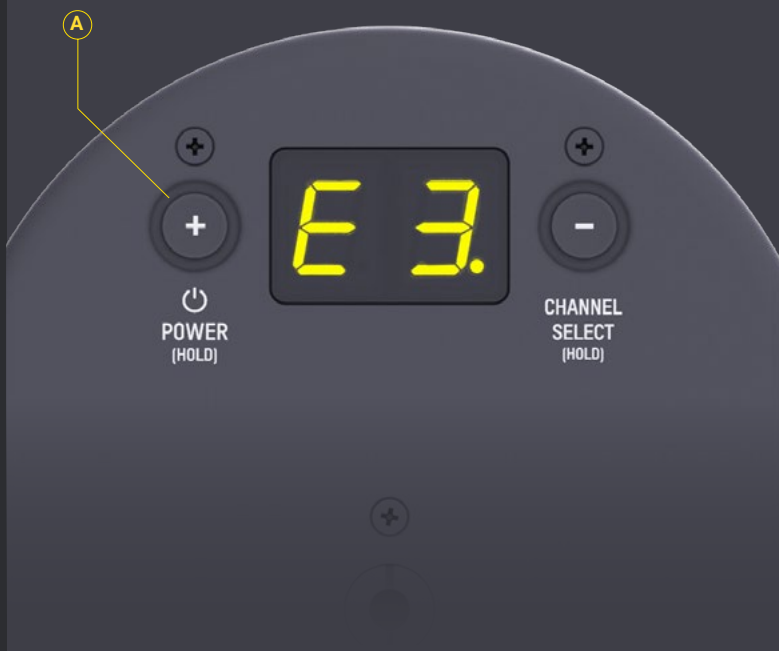

USING THE ALT POWER SOURCE

If an XYZ Reality internal battery is not available, DC mains input can be used as an alternative.

Plugging in the DC Input.
Flip up the DC Input weather seal (A) and gently push the round pin of the DC adaptor (B) into the revealed DC Power input. Once attached the unit can be powered up as normal.

NOTE

The battery Level LEDs will not operate with DC input attached.

Only use XYZ Reality supplied DC Power Adaptor. Do not use alternative power adaptors.

UNFOLDING THE TRIPODS

Unfolding the Tripod.
To use the tripod, unscrew the securing screws to fully open the tripod's legs (A, B). Once open, tighten the screw.

Elevating the Tripod.
By turning the telescopic locks (C) anti-clockwise, each telescopic section can be lengthened. Turn the grip-locks clockwise to secure each section.

Never place the tripods on unstable ground or on surfaces likely to move or vibrate.

Motion or vibration could cause accuracy and tracking problems.

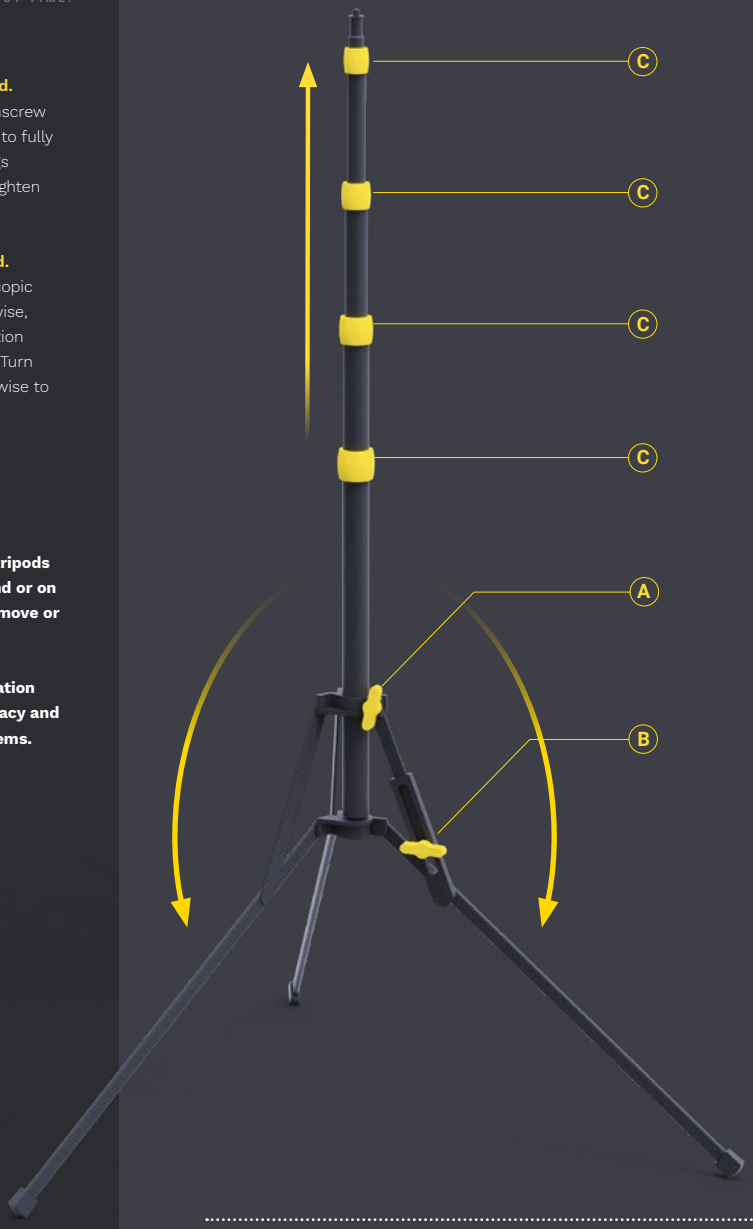

ATTACHING THE QUICK RELEASE

Attach To Tracking Beacon.
Use the inbuilt Allen bolt (C) in the quick release top half (A) to attach to the tripod thread in the base (or top) of the tracking beacon (B).

Attach To Ball Head.
Use the tripod thread in the lower half of the quick release (D) to screw securely on to the ball head (E).

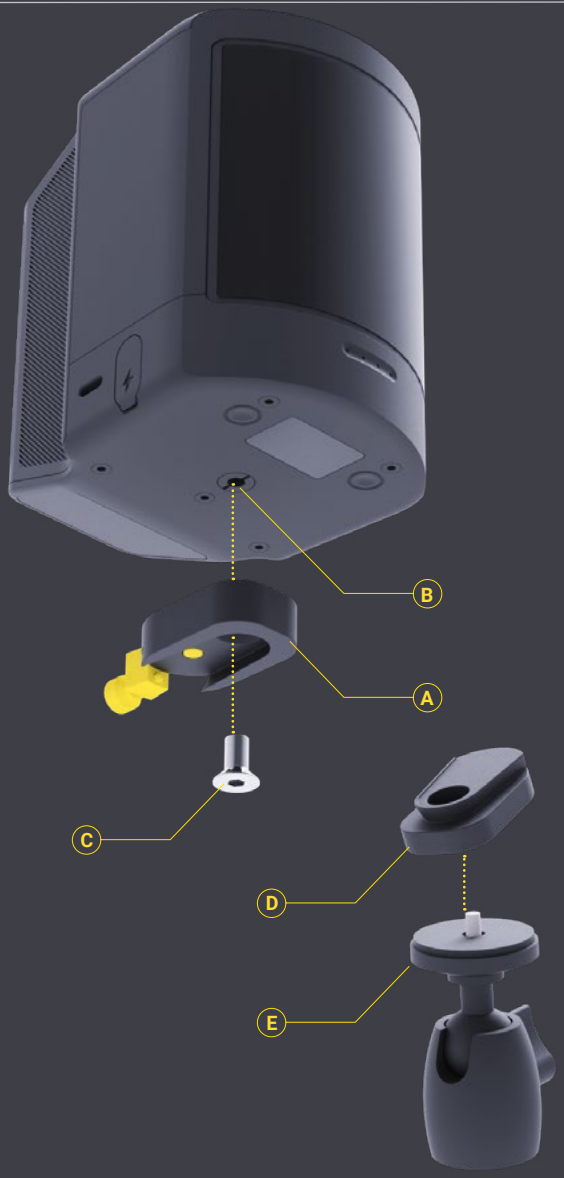

USING THE BALL HEAD

Releasing the Ball Head.
To adjust the angle and rotation of the tracking beacon, stabilise the tracking beacon with one hand and release the handle on the rear of the Ball Head anti-clockwise (A).

Positioning the Beacon.
Once released, position the tracking beacon as desired (B) and re-tighten the handle on the Ball Head clockwise (C).

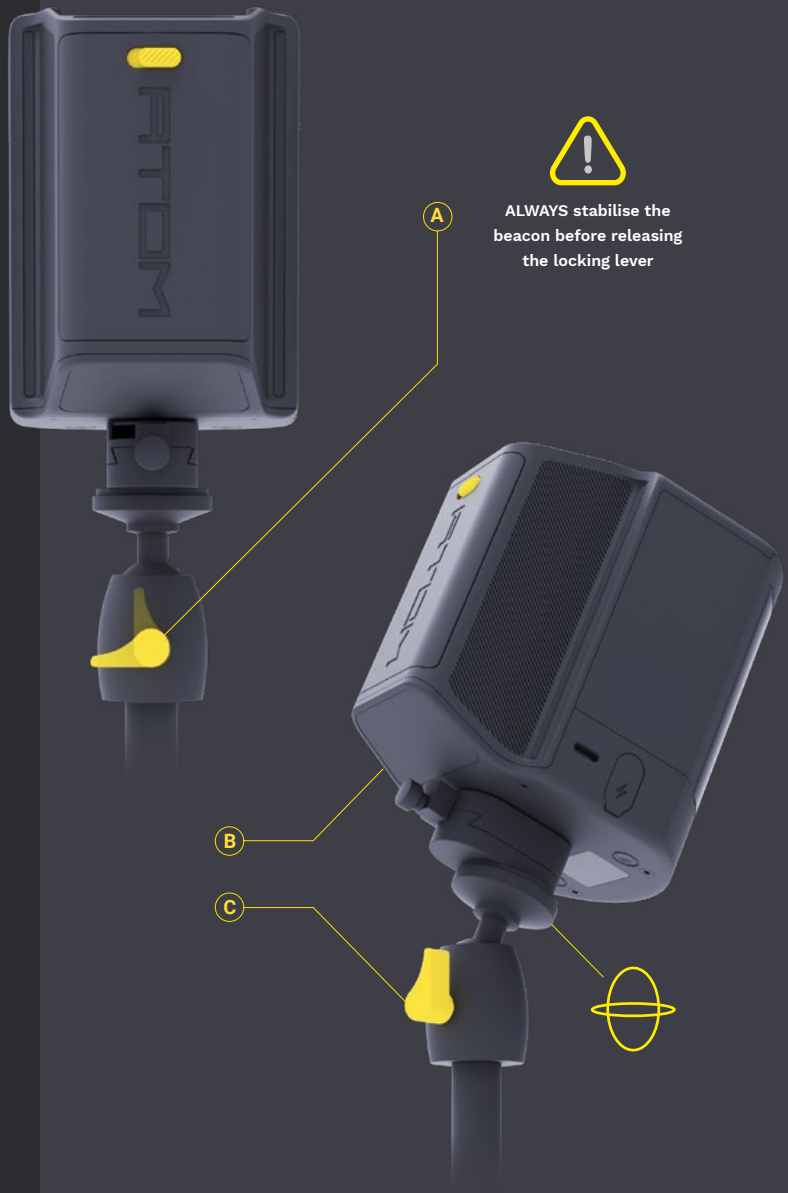

ALWAYS stabilise the beacon before releasing the locking lever

USING THE QUICK RELEASE

Removing the Beacon.
To quick-release the Tracking Beacon, unscrew the knob on the rear of the quick release and push the lever to the left (A). The Tracking Beacon will now slide forward, free of the quick release (B).

Reverse this process to securely re-attach the Tracking Beacon.

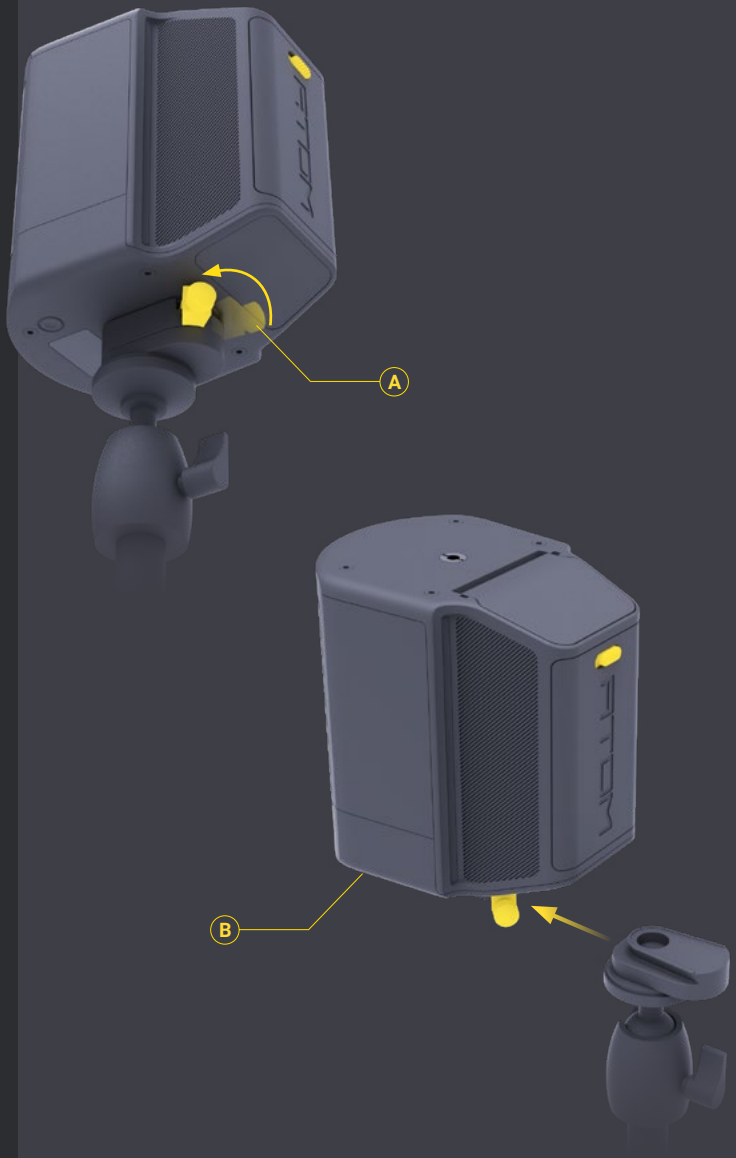

DROP WARNING

Please note The Atom products are precision calibrated equipment.

If The Atom is impacted or dropped it should be returned to XYZ Reality for servicing or replacement. After impact, tracking accuracy may be negatively affected even if damage is not visible.

Always store and transport XYZ Reality products in protective packaging.

SETTING UP THE CHARGING STATION

Unfolding the Wings.
Gently pull down on the side wings (A) to unfold them and reveal the battery charging pin contacts (B).

Plugging In.
Using the supplied charging station power supply, insert the power cable (C) into the power input (D) on the charging station and plug the switching PSU into a standard voltage wall socket (AC 120v/240v).

Only use XYZ Reality supplied switching power supply. Do not use alternative power supplies.

PSU Ground Pin MUST be metal, mains connectors with plastic ground pins are not suitable for use with this product.

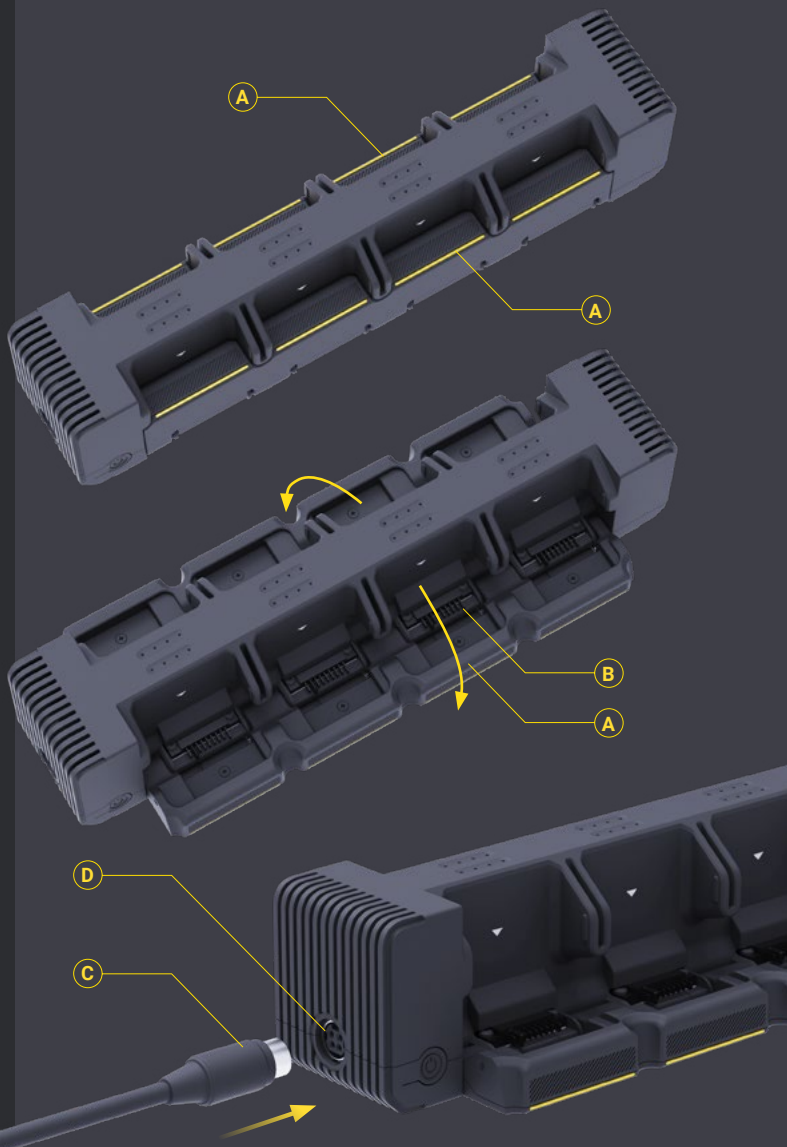

POWERING ON/OFF

Powering ON.
Press and hold the power button (A) on the charging station. The two LEDs nearest the power connector should illuminate (B).

Powering OFF.
Press and hold the power button (A) for two seconds to power off the charging station. When powered off all charging will stop.

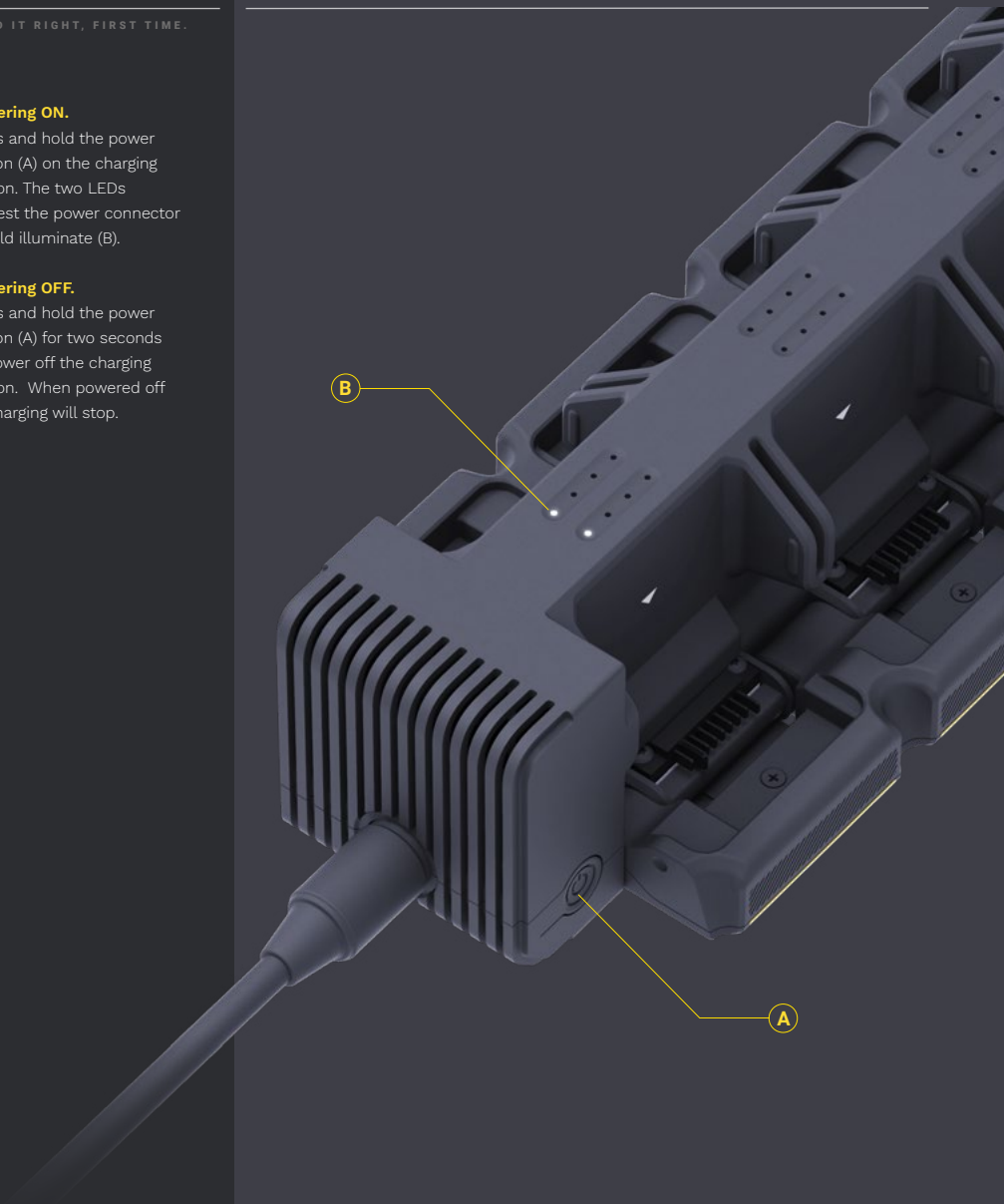

CHARGING THE INTERNAL BATTERIES

Inserting Batteries.
Insert the XYZ Reality internal battery head-down into a free charging station terminal (A).

Checking Charge Level.
The 4 LEDs next to the battery being charged will illuminate to show the charge level of the battery during charging. They will pulse to indicate charge is occurring.

NOTE

The charging station is capable of charging 8 x internal batteries and 2 x external batteries simultaneously.

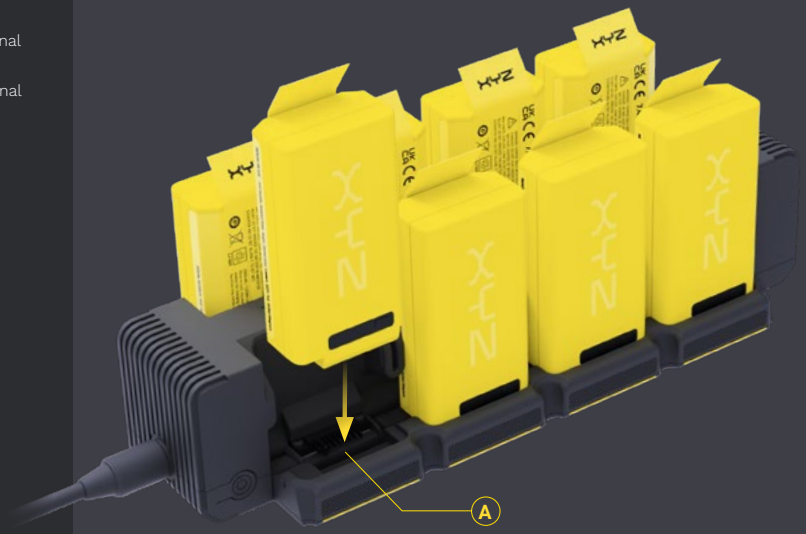

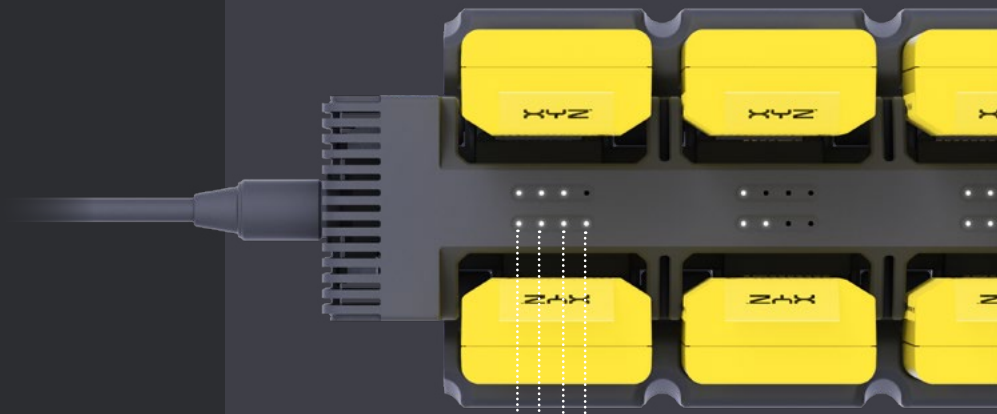

0 - 25% Charge
25 - 50% Charge
50 - 75% Charge
75 - 100% Charge

CHARGING THE POWER PACK

Plug in the External Pack.
Plug the XYZ USB-C to C cable into a USB C port on the charging station (A) and plug the other end into the in/out USB-C port on the external power pack.

Checking Charge Level.
The charging status of the external power will be shown on the external power pack's display.

NOTE

The external power pack cannot be charged using the 60watt USB-C port (X).

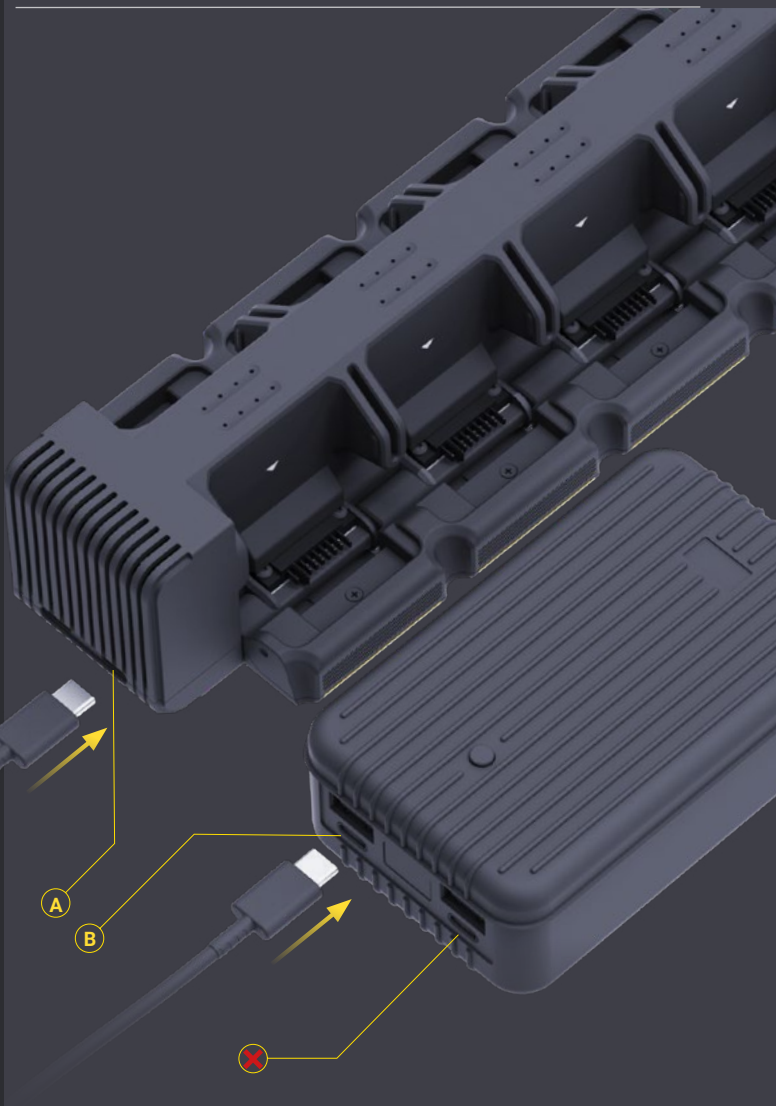

CHARGING STATION SAFETY

Safe Use

Please note that the The Atom Charging Station is not a weather resistant or user serviceable product.

- **The charging station is designed for indoor use only.**
- **Never use the charging station in an environment with abundant dust or particles in the air.**
- **Never expose the Charging Station to water droplets or moisture**
- **If the Charging Station or charging station power supply appear wet, dust-clogged or damaged in any way (including exhibiting unexpected behaviour) immediately stop use, switch off power to the unit and contact XYZ customer support.**
- **Do not open or attempt to service the Charging Station, there are no user serviceable components inside, opening the unit poses risk of shock.**

Please do not attempt to charge non-XYZ Reality devices using the charging station. Safe operation cannot be guaranteed when attached to third party products and damage to the charging station or the third party product may occur.

PRODUCT TECHNICAL SPECIFICATIONS

Atom Hard Hat
Operating Range: -10°C - +40°C
Input Voltage:
BATTERY: 6 - 8.4V 100W
USB C PD: 20V 100W
Radio Technologies:
Bluetooth 5.1 - 100mW operating in the 2402-2480MHz band
Wi-Fi 2.4GHz - 100mW operating in the 2401-2484MHz band
Proprietary 2.4GHz - 63mW operating in the 2400-2525MHz band

Atom Controller
Operating Range: 0°C - +40°C
Input Rating:
BATTERY: 6 - 8.4V 15W
USB C: 5V 15W
Radio Technologies:
Proprietary 2.4GHz - 4mW operating in the 2360-2500MHz band

Tracking Beacon
Operating Range: 0°C - +40°C
Input Rating:
BATTERY: 6 - 8.4V 15W
USB C: 5V 15W
DC: 12V 15W
Radio Technologies:
Bluetooth 5.1 - 36mW operating in the 2402-2480MHz band

Internal Battery
Charging Range: 0°C - +40°C
Discharging Range: -20°C - +60°C
Charging Rating: CC/CV 8.4V 18W
Discharging Rating: 5.5 - 8.4V 120W

External Battery
Charging Range: 0°C - +35°C
Discharging Range: 0°C - +35°C
Charging Rating: USB C PD 5/9/15/20V 100W Max
Discharging Rating: USB C PD 5/9/15/20V 100W Max
USB C PD 5/9/15/20V 60W Max
USB 5V/9V/12V 18W (ZEN+2.0)
USB 5V 15W (ZEN+)

Charging Station
Operating Range: 0°C - +40°C
Input Rating:
24V DC 180W

IMPORTANT SAFETY & PRODUCT INFO

WARNING
Failure to properly use this product or avoid hazardous situations could result in an accident resulting in serious injury or death.

THE MOST RECENT VERSION OF THIS IMPORTANT SAFETY AND PRODUCT INFORMATION DOCUMENT IS AVAILABLE AT https://xyzreality.com/product/user_manuals AND MAY BE AN UPDATED VERSION OF THIS
DOCUMENT. Visit https://xyzreality.com/product/legal for other legal information including patent notices.

READ BEFORE USE
Your product is not designed for use with any unauthorized software, accessory or device. Use with unauthorized software, accessories or devices may cause performance issues or damage.

Do not use this product when you: are under the influence of alcohol or drugs; are sleep deprived; have vision impairment; are under emotional distress or have a medical condition affecting balance. This product should not be used by children under the age of 13.

Do not leave the product exposed to a heat source or in a high temperature location.

Do not disassemble, drop, modify, re-manufacture, puncture or damage the product or batteries.

Do not immerse or expose the product or batteries to water or other liquids, fire, explosion or other hazard.

Do not use a power or data cable not approved or supplied by XYZ Reality.

Contact your local waste disposal department to dispose of the product/batteries in accordance with applicable laws and regulations.

This product is not a medical device. The data provided by the device is not intended to be utilized for medical purposes and is not intended to diagnose, treat, cure, or prevent any disease.

LASER WARNING
This product contains a Class 2 laser which emits visible and invisible laser light. Never look into or directly at the laser when powered on or operating the product. Never allow anyone else direct exposure to the beam as it may cause injury. The Class 2 laser classification means that under normal operation, blink reflex should serve to prevent eye injury unless deliberately suppressed, and no protective equipment must be worn, however, misuse of the product may result in exposure to radiation or injury.

HEALTH AND SAFETY WARNING
Some people may have severe dizziness, seizures, eye issues or other responses which are triggered by light flashes. This may occur even if you have no history of seizure or epilepsy. If you experience any of these symptoms while using this product, discontinue use immediately and see a doctor.

ONLY USE THIS PRODUCT IN A SAFE ENVIRONMENT. Augmented reality technology allows for computer generated images to be placed in your line of sight. Always be aware of your surroundings while using this product.

Do not wear this product for extended periods of time. Take breaks when needed. Every user is different so take more frequent breaks if you feel discomfort.

Immediately discontinue use if you experience eye strain, blurred vision, dizziness, impaired balance, light-headedness, pain in the head or eyes or any similar symptom. Until fully recovered from these symptoms, do not drive, operate machinery, or take part in activities that may have potentially serious consequences.

The parts of this product that emit radio waves could affect the operation of nearby electronics such as a hearing aid, pacemaker or defibrillator. If you have any of these devices, see your doctor before use. Stop using this product immediately if you notice interference between this product and your medical device.

BATTERY WARNING
A lithium-ion battery is used in this device. If these guidelines are not followed, batteries may experience a shortened life span or may present a risk of damage to the device, fire, chemical burn, electrolyte leak and/or injury.

Do not disassemble, modify, re-manufacture, puncture or damage the batteries. Do not immerse or expose the batteries to water or other liquids, fire, explosion, or other hazard.

LIMITED WARRANTY
THE MOST RECENT VERSION OF THE WARRANTY IS AVAILABLE AT
https://xyzreality.com/product/legal/warranty

PRIVACY NOTICE
This product may contain equipment which allows GPS tracking, photography and/or video capabilities. In some jurisdictions it could be considered an invasion of privacy rights to conduct tracking of individuals, take or publicly display photographs or videos of people using this product.

It is your responsibility to know and comply with applicable laws and rights to privacy in your jurisdiction. If you have questions about how we manage data privacy, please review our Privacy Policy located at https://xyzreality.com/product/privacy-policy/.

IMPORTANT SAFETY & PRODUCT INFO

UPDATES
You may receive updates, bug fixes, feature enhancements or improvements, or other data relating to the software embedded in this product (collectively "Updates"). In some situations, you will have the option to decline the Update, in which case the software may not perform properly. In some situations, an Update may be required for functionality of the software, and you must complete installation in order to continue use of the software. In instances where the software is hosted, installation of updates may be automatic.

TERMS AND CONDITIONS OF SALE
Your purchase and/or use of this product is subject to the terms of any existing written sales agreement that you have with XYZ Reality governing that particular product or service, or, if none, by XYZ's Terms and Conditions of Sale found at HTTPS://XYZREALITY.COM/PRODUCT/LEGAL/TERMS_AND_CONDITIONS. the terms of which are incorporated herein by reference.

REGULATORY INFORMATION
CAN ICES-3 (B)/NMB-3(B)

Information on application of EU WEEE Directive
This product is subject to European Union regulations that promote the re-use and recycling of used electrical and electronic equipment. The symbol above, on the product, its batteries or packaging, means that the product and its batteries must not be disposed of with your household waste. Instead, it is your responsibility to dispose of your waste equipment by handing it over to a designated collection point for the recycling of waste electrical and electronic equipment. The separate collection and recycling of your waste equipment at the time of disposal will help to conserve natural resources and ensure that it is recycled in a manner that protects human health and the environment. For more information about where to drop off your waste equipment, please contact your local city office, your household waste disposal service or the place where you purchased the product

Z87 (ANSI Z87.1)
1 S - EN 166 S (EN 166).

DECLARATIONS OF CONFORMITY

XYZ REALITY LTD. tímto prohlašuje, že tento ATOM je ve shodě se základními požadavky a dalšími příslušnými ustanoveními směrnice 2014/53/EU.

Undertegnede, XYZ REALITY LTD. erklærer herved, at følgende udstyr ATOM overholder de væsentlige krav og øvrige relevante krav i direktiv 2014/53/EU.

Hiermit erklärt, XYZ REALITY LTD. dass sich das Gerät ATOM in Übereinstimmung mit den grundlegenden Anforderungen und den übrigen einschlägigen Bestimmungen der Richtlinie 2014/53/EU befindet.

Käesolevaga kinnitab , XYZ REALITY LTD. seadme ATOM vastavust direktiivi 2014/53/EL põhinõuetele ja nimetatud direktiivist tulenevatele teistele asjakohastele sätetele.

Hereby, XYZ REALITY LTD. declares that ATOM is in compliance with the essential requirements and other relevant provisions of Directive 2014/53/EU.

Por medio de la presente XYZ REALITY LTD. declara que el ATOM cumple con los requisitos esenciales y cualesquiera otras disposiciones aplicables o exigibles de la Directiva 2014/53/UE.

ΜΕ ΤΗΝ ΠΑΡΟΥΣΑ, XYZ REALITY LTD. ΔΗΛΩΝΕΙ ΟΤΙ ATOM ΣΥΜΜΟΡΦΩΝΕΤΑΙ ΠΡΟΣ ΤΙΣ ΟΥΣΙΩΔΕΙΣ ΑΠΑΙΤΗΣΕΙΣ ΚΑΙ ΤΙΣ ΛΟΙΠΕΣ ΣΧΕΤΙΚΕΣ ΔΙΑΤΑΞΕΙΣ ΤΗΣ ΟΔΗΓΙΑΣ 2014/53/ΕΕ.

Par la présente, XYZ REALITY LTD. déclare que l'appareil ATOM est conforme aux exigences essentielles et aux autres dispositions pertinentes de la directive 2014/53/UE.

Con la presente , XYZ REALITY LTD. dichiara che questo ATOM è conforme ai requisiti essenziali ed alle altre disposizioni pertinenti stabilite dalla direttiva 2014/53/UE.

Ar šo XYZ REALITY LTD. deklarē, ka ATOM atbilst Direktīvas 2014/53/ES būtiskajām prasībām un citiem ar to saistītajiem noteikumiem,

Šiuo XYZ REALITY LTD. deklaruoja, kad šis ATOM atitinka esminius reikalavimus ir kitas 2014/53/ES Direktyvos nuostatas.

Hierbij verklaart , XYZ REALITY LTD. dat het toestel ATOM in overeenstemming is met de essentiële eisen en de andere relevante bepalingen van richtlijn 2014/53/EU.

Hawnhekk, XYZ REALITY LTD., jiddikjara li dan ATOM jikkonforma mal-ħtiġijiet essenzjali u ma provvedimenti oħrajn relevanti li hemm fid-Dirrettiva 2014/53/UE.

Alulírott, , XYZ REALITY LTD. nyilatkozom, hogy a ATOM megfelel a vonatkozó alapvető követelményeknek és az 2014/53/EU irányelv egyéb előírásainak.

Niniejszym XYZ REALITY LTD. oświadcza, że ATOM jest zgodny z zasadniczymi wymogami oraz pozostałymi stosownymi postanowieniami Dyrektywy 2014/53/UE.

DECLARATIONS OF CONFORMITY

XYZ REALITY LTD. declara que este ATOM está conforme com os requisitos essenciais e outras disposições da Directiva 2014/53/UE.

XYZ REALITY LTD. izjavlja, da je ta ATOM v skladu z bistvenimi zahtevami in ostalimi relevantnimi določili direktive 2014/53/EU.

XYZ REALITY LTD. týmto vyhlasuje, že ATOM spĺňa základné požiadavky a všetky príslušné ustanovenia Smernice 2014/53/EÚ.

XYZ REALITY LTD. vakuuttaa täten että ATOM tyyppinen laite on direktiivin 2014/53/EU oleellisten vaatimusten ja sitä koskevien direktiivin muiden ehtojen mukainen.

Härmed intygar XYZ REALITY LTD. att denna ATOM står I överensstämmelse med de väsentliga egenskapskrav och övriga relevanta bestämmelser som framgår av direktiv 2014/53/EU.

Hér með lýsir XYZ REALITY LTD. yfir því að ATOM er í samræmi við grunnkröfur og aðrar kröfur, sem gerðar eru í tilskipun 2014/53/EU.

XYZ REALITY LTD. erklærer herved at utstyret ATOM er i samsvar med de grunnleggende krav og øvrige relevante krav i direktiv 2014/53/EU.

Noi, XYZ REALITY LTD., declarăm pe propria noastră răspundere că produsul ATOM este în conformitate cu cerinţele esenţiale şi celelalte prevederi aplicabile ale Directivei 2014/53/UE.

**ATOM (10-02-01-0001, 20-02-01-0001, 30-02-01-0001, 40-02-01-0001, 50-02-01-0001)*

• • •

Hereby, XYZ REALITY LTD. declares that the radio equipment type ATOM (models 10-02-01-0001, 20-02-01-0001, 30-02-01-0001, 40-02-01-0001, 50-02-01-0001) is in compliance with the relevant statutory requirements.

A copy of the full Declaration can be downloaded from HTTPS://XYZREALITY.COM/PRODUCT/LEGAL/CONFORMITY

DECLARATIONS OF CONFORMITY

This device complies with part 15 of the FCC Rules. Operation is subject to the following two conditions: (1) This device may not cause harmful interference, and (2) this device must accept any interference received, including interference that may cause undesired operation.

NOTE: This equipment has been tested and found to comply with the limits for a Class A digital device, pursuant to part 15 of the FCC Rules. These limits are designed to provide reasonable protection against harmful interference when the equipment is operated in a commercial environment. This equipment generates, uses, and can radiate radio frequency energy and, if not installed and used in accordance with the instruction manual, may cause harmful interference to radio communications. Operation of this equipment in a residential area is likely to cause harmful interference in which case the user will be required to correct the interference at his own expense.

Warning: any changes or modifications not expressly approved by the XYZ Reality Limited could void the user's authority to operate the equipment.

47 CFR § 2.1077 Compliance Information

Unique Identifier: ATOM (models 10-02-01-0001, 20-02-01-0001, 30-02-01-0001, 40-02-01-0001, 50-02-01-0001)
Responsible Party – XYZ Reality US Inc. Northwest Registered Agent Service, Inc. 8 The Green Ste B, Dover, DE 19901

Email - christy.woskobojnik@dykeyaxley.com
Tel - +1 216 644 3122

• • •

This device contains a licence-exempt transmitter that comply with Innovation, Science and Economic Development Canada's licence-exempt RSS-247. Operation is subject to the following two conditions:

1) This device may not cause interference.
2) This device must accept any interference, including interference that may cause undesired operation of the device

Le présent appareil est conforme aux CNR d'Industrie Canada applicables aux appareils radio exempts de licence. L'exploitation est autorisée aux deux conditions suivantes

(1) l'appareil nedoit pas produire de brouillage, et
(2) l'utilisateur de l'appareil doit accepter tout brouillage radioélectrique subi, même si le brouillage est susceptible d'en compromettre le fonctionnement

CAN ICES-003(A) / NMB-003(A)

XYZ™

BUILD IT RIGHT, FIRST TIME.

ATOM

USER MANUAL

VERSION: #COMPLIANCE

DATE OF ISSUE: 02/12/21

If any further information is required please go to **www.xyzreality.com**
or contact: **Email - support@xyzreality.com / Phone - +44 (0)207 081 3009**

©XYZ REALITY 2021