NeoCoil

NC00E262 User's Manual

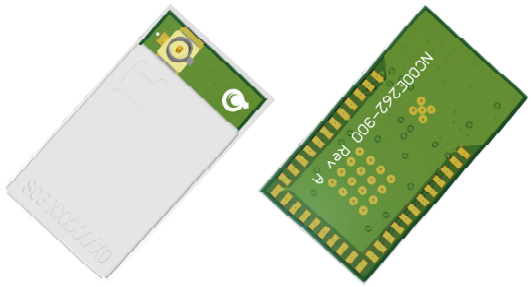

1. Overview

   The NC00E262 module is a surface mount module integrating a CC8530 PurePath™ wireless audio transceiver and an integral antenna. The module incorporates a crystal, the required RF matching and filtering for regulatory compliance as well as filtering on all digital lines for noise reduction and sensitivity.

   The module operates in the global non-licensed 2.4GHz ISM/SRD frequency band. This radio module is ideal for achieving low power, long range wireless connectivity without having to deal with extensive protocol, RF, antenna design and regulatory compliance issues; as a result, costs and time to market can be significantly reduced. The modules are 100% tested to provide consistent performance.

   The NC00E262 module has received regulatory approvals for modular devices in the United States (FCC), Canada (IC) and Europe (ETSI). The modular approval allows the end user to place a NC00E262 module inside a finished product without having to perform expensive regulatory testing for an intentional RF radiator. Section 2.3 has information on the requirements for the end user/integrator to fulfill to use the modules without intentional radiator regulatory testing.

   The NC00E262 is based on the CC8530 transceiver from Texas Instruments (TI). All control lines are provided at module level for full control of its operation. Please see the datasheets for CC8530 (www.ti.com) for how to operate, program and control the module. The PurePath™ protocol is developed by TI, specifically for the CC85xx series chips and synchronous wireless digital audio distribution. The protocol provides graceful degradation of the audio signal using proprietary algorithms to make intermittent connectivity inaudible. Therefore, the NC00E262 module is not suitable for strict data transport.

   The module/protocol must be configured and programmed by the OEM/Integrator to setup the specific CODEC IC used for audio conversion, and to setup control buttons and manufacturer/network addresses. This is described in detail in the CC8530 datasheet, CC85xx

Application Reference Design Guide and other PurePath™ documentation that can be found on TI website (www.ti.com). Calibration of transmit power from the module is covered in section 5.1.

The NC00E262 module measures 11 mm x 19 mm x 3.5mm.

1.1. Features

Features	Benefits
• Uncompressed wireless audio connectivity • Predefined protocol • Configurable human interface • Autonomous or hosted mode • 2.2V to 3.6V operation • Programmable output power up to +5 dBm • RoHS compliant • Very small package size: 11mm x 19mm x 3.5mm	• Operating temperature -40C to +85C • 100% RF tested in production for repeatable performance • No RF engineering experience necessary • No protocol experience necessary • Only requires a 2-layer host PCB implementation • FCC, IC, and ETSI complaint • No regulatory "intentional radiator" testing required for integrating module into end product. Simple certification labeling replaces testing.

1.2. Theory of Operation

The NC00E262 interfaces directly to an audio CODEC IC through the I^2S for audio data and I^2C for volume control and other CODEC settings.

A block diagram is given for the NC00E262 module in Figure 1.

- Antenna
  - The antenna couples energy between the module and free space. The integral antenna provides a near omni-directional antenna pattern with high efficiency such that the application will work equally well in any direction. Note that the radiation pattern depends not only on the antenna, but also the ground plane, enclosure and installation environment.
- Filtering
  - Filtering removes spurious signals to comply with regulatory intentional radiator requirements, provides reduced susceptibility to power supply and digital noise, and filters out RF and high frequency noise from the digital audio and control link (I^2S, I^2C).
- Matching
  - Matching provides the correct loading of the transmit amplifier to achieve the highest output power as well as the correct loading for the receive LNA to

achieve better sensitivity.

- Protocol
  - The protocol implements an entire wireless audio transport mechanism with adaptive frequency usage, retransmission of lost packets as well as an auxiliary low data rate link for remote control.

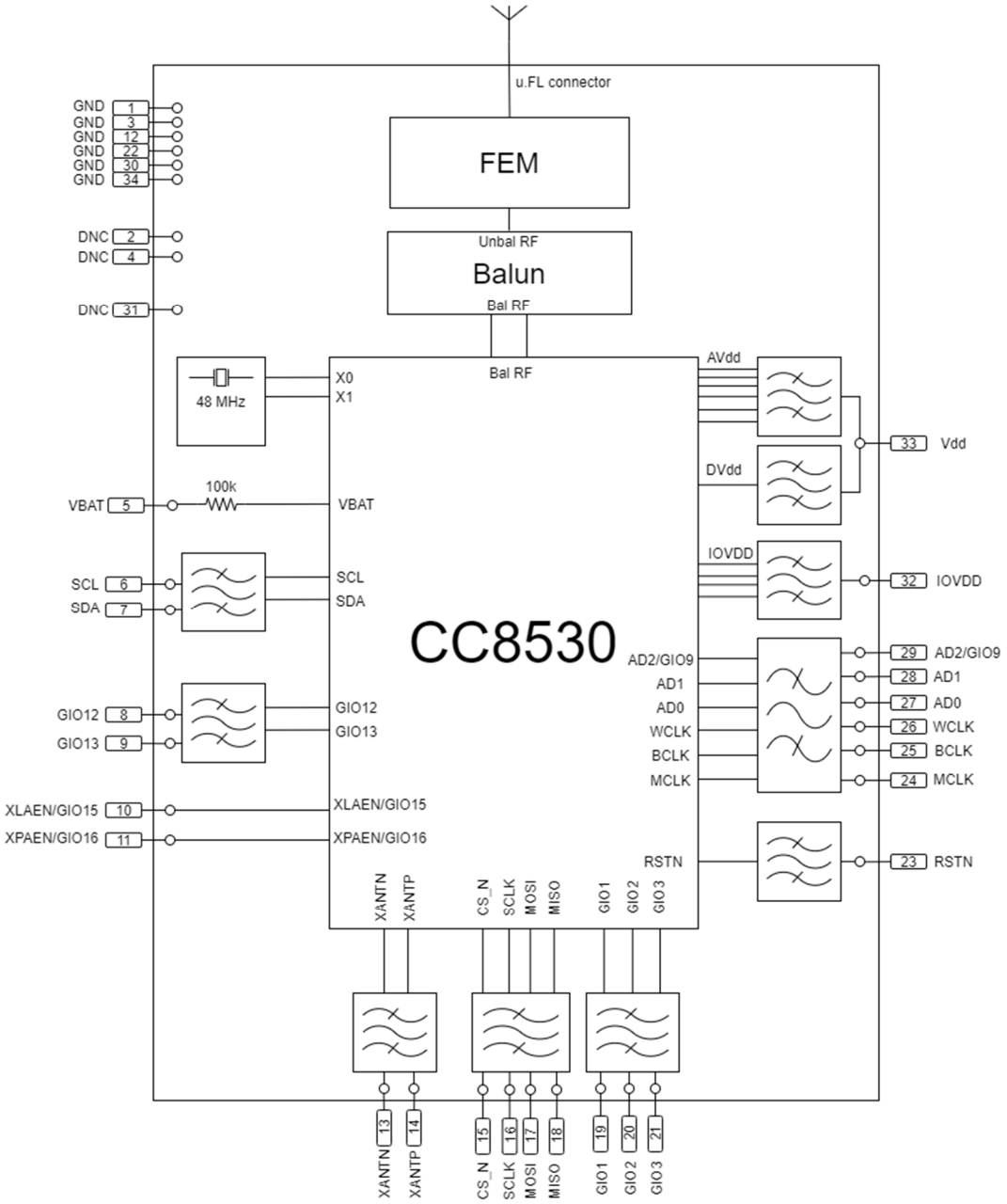

Figure 1 Detailed block diagram of NC00E262

Table 1 Approved Antenna(e)

Item	Part Number	Manufacturer	Type	Peak Gain (dBi)
1	1461530050	Molex	Dipole	3.2@2.4 GHz

1.2.1. Network Topology and Nomenclature

A NC00E262 network consists of one Protocol Master (PM) and one, two or three Protocol Slave(s) (PS). The PM provides the audio reference clock and controls network association. The PS regenerates the audio reference clock based on the packets received. Audio can be transmitted from the PM to the PS. The device receiving the audio is called an Audio Sink, and the device sending the audio is called an Audio Source. A device can be both an Audio Sink and an Audio Source simultaneously. The NC00E262 network also includes a data side-channel which is a bidirectional data link between the PM and all PSs in the network.

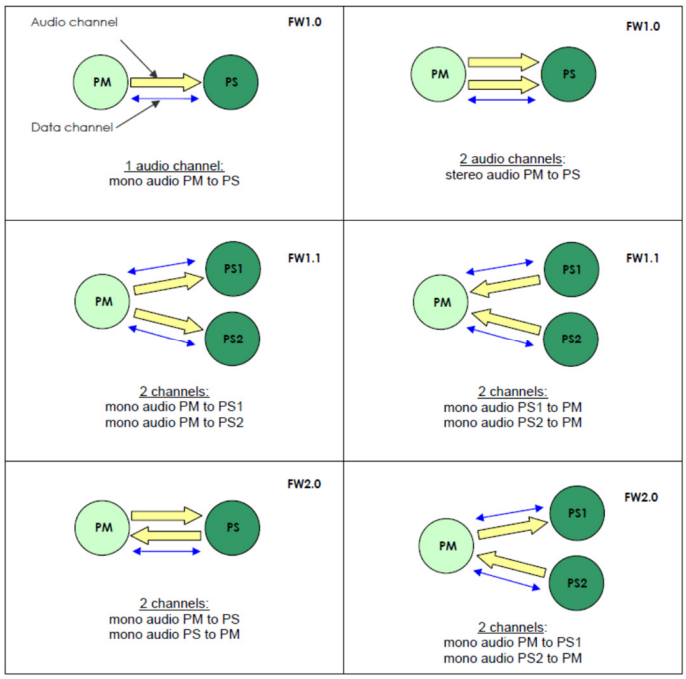

Figure 2 CC85xx topologies supported on different firmware revisions. See TI website for latest releases.

1.2.2. Adaptive Frequency Hopping

The purpose of using frequency hopping in a radio system is to provide diversity that permits data throughput to be maintained even if interfering radio systems or the physical environment (e.g. multipath fading) render some RF channels unusable. In the 2.4 GHz ISM

band, the sheer amount of radio systems and the severity and dynamic nature of indoor fading phenomena in typical operating environments require the use of this kind of diversity if a minimum data throughput is to be guaranteed. Frequency hopping systems can either implement a fixed sequence of channel hops or adapt its hopping sequence dynamically to the changing environment it operates in. In order to maximize its own chances of delivering audio data in time and to co-exist amicably with other fixed-frequency or adaptive frequency hopping systems, PurePath™ Wireless uses an adaptive frequency hopping (AFH) scheme that adapts to changing conditions within tens of milliseconds. PurePath Wireless divides the 2.4 GHz band into 18 RF channels with 4 MHz bandwidth. A protocol master that controls the adaptive frequency hopping scheme for the audio network, maintains a table with an entry for each RF channel and an associated quality-of-service (QoS) estimate for each. Each time an RF channel is used the QoS estimate is updated based on what happens during the timeslot. The frequency hopping algorithm separates the 18 RF channels into two sets:

- A set of 4 active channels
- A set of 14 trial channels

The active channel set contains the preferred RF channels that have proven that they provide sufficiently good quality-of-service. The trial channel set contains the remaining RF channels that are only evaluated occasionally to be able to maintain an accurate picture of their quality-of-service. If the QoS estimate of an RF channel in the active set goes beyond a minimum threshold this channel is swapped out with the RF channel in the trial channel set that has the best QoS estimate. Other factors play in when selecting a new RF channel to the active channel set, such as trying to maintain a certain minimum distance in frequency between the different active channels.

The frequency hopping algorithm, when no swaps between the active and trial channel sets occur, goes through a sequence of 70 hops over the course of which every RF channel has been used.

This 70-hop macrosequence consists of 14 repetitions of a:

- 5-hop microsequence during which:
    - Each of the four active RF channels are used once
    - One of the trial RF channels is used once (cycling through all trial channels over the course of a macrosequence)

Figure 3 illustrates this concept. This gives an average steady-state RF channel usage in an audio network of:

- Each of the four active RF channels are used 20% of the time
- Each trial channel is used 1.43% of the time

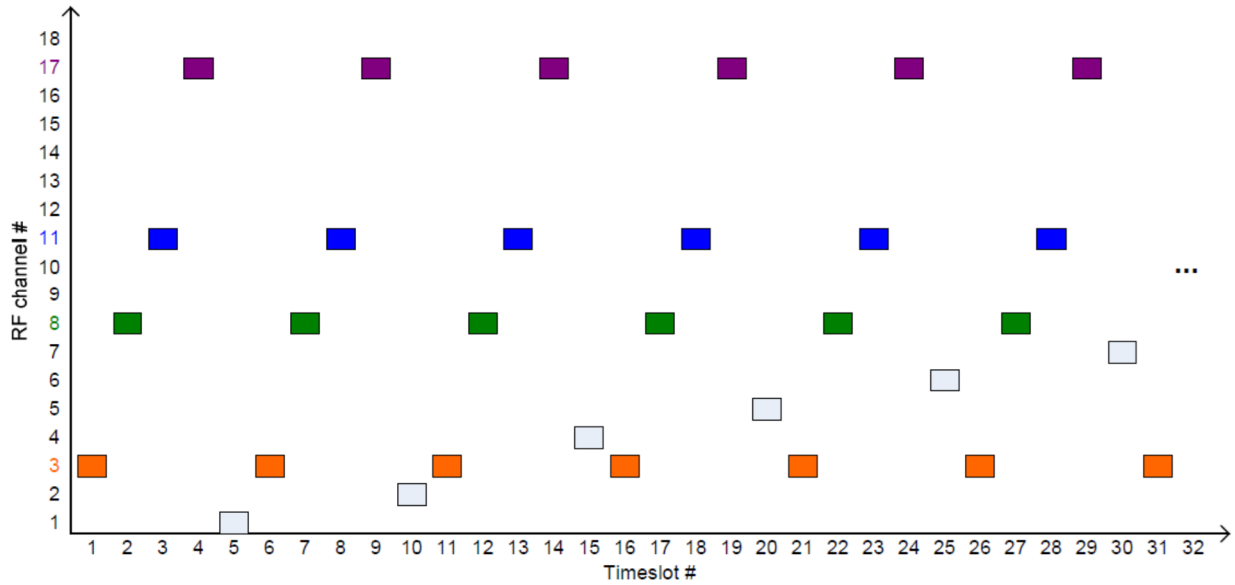

Figure 3 Example of AFH hop sequence (active set in color, trial set in black/gray). The channels correspond to center frequencies as given in Table 2.

Table 2. Channel-to-frequency lookup table

Channel	Center Frequency (MHz)	Channel	Center Frequency (MHz)
1	2406	10	2442
2	2410	11	2446
3	2414	12	2450
4	2418	13	2454
5	2422	14	2458
6	2426	15	2462
7	2430	16	2466
8	2434	17	2470
9	2438	18	2474

1.3. Applications

- Wireless headphones
- Wireless headsets
- Wireless speakers
- Wireless studio equipment
- Wireless microphones

2. Approvals and Usage

NC00E262 has been designed to meet FCC (US), IC (Canada) and ETSI (Europe) regulations. In particular, the radio modules have been certified to the following standards.

2.1. Product Approvals

2.1.1. USA (Federal Communications Commission, FCC)

The NC00E262 module has been tested to comply with 47 CFR Part 15 Subpart C "Intentional Radiators". The devices meet the requirements for modular transmitter approval as detailed in FCC public notice DA 00-1407 Released: June 26, 2000. The NC00E262 module eliminates the need to re-perform costly and time-consuming 'intentional radiator' testing when submitting an end product for certification.

(15.19a3) The NC00E262 module complies with part 15 of the FCC rules. Operation is subject to the following two conditions: (1) This device may not cause harmful interference, and (2) this device must accept any interference received, including interference that may cause undesired operation.

Any changes or modifications not expressly approved by the party responsible for compliance could void the user's authority to operate the equipment.

2.1.1.1. FCC Labeling Requirements

The NC00E262 module has been labeled with its own FCC ID number. If the FCC ID is not visible when the module is installed inside another device, then the outside of the finished product into which the module is installed must also display a label referring to the enclosed module. This exterior label can use wording such as the following:

Contains Transmitter Module FCC ID: 2A3CY-NC00E262 -or- Contains FCC ID: 2A3CY-NC00E262 This device complies with Part 15 of the FCC Rules. Operation is subject to the following two conditions: (1) This device may not cause harmful interference, and (2) this device must accept any interference received, including interference that may cause undesired operation.

It is the user's responsibility to ensure the proper FCC identification number is used when marking the exterior of the unit.

2.1.1.2. End User Manual

The end user manual should include the following statement:

This equipment has been tested and found to comply with the limits for a Class B digital device, pursuant to part 15 of the FCC Rules. These limits are designed to provide reasonable protection against harmful interference in a residential installation. This equipment generates, uses and can radiate radio frequency energy and, if not installed and used in accordance with the instructions, may cause harmful interference to radio communications. However, there is no guarantee that interference will not occur in a particular installation. If this equipment does cause harmful interference to radio or television reception, which can be determined by turning the equipment off and on, the user is encouraged to try to correct the interference by one or more of the following measures:

- Reorient or relocate the receiving antenna.
- Increase the separation between the equipment and receiver.
- Connect the equipment into an outlet on a circuit different from that to which the receiver is connected.
- Consult the dealer or an experienced radio/TV technician for help.

2.1.1.3. RF Exposure

All transmitters regulated by FCC must comply with RF exposure requirements. OET Bulletin 65 “Evaluating Compliance with FCC Guidelines for Human Exposure to Radio Frequency Electromagnetic Fields” provides assistance in determining whether proposed or existing transmitting facilities, operations or devices comply with limits for human exposure to Radio Frequency (RF) fields adopted by the Federal Communications Commission (FCC). The bulletin offers guidelines and suggestions for evaluating compliance. If appropriate, compliance with exposure guidelines for mobile and unlicensed devices can be accomplished by the use of warning labels and by providing users with information concerning minimum separation distances from transmitting structures and proper installation of antennas.

The following statement must be included as a CAUTION statement in manuals and OEM products to alert users of FCC RF Exposure compliance:

To satisfy FCC RF Exposure requirements for mobile and base station transmission devices, a separation distance of 2.5 cm or more should be maintained between the antenna of this device and persons during operation. To ensure compliance, operation at closer than this distance is not recommended. The antenna(s) used for this transmitter must not be co-located or operating in conjunction with any other antenna or transmitter.

If the NC00E262 module is used in a portable application (antenna is less than 2.5 cm from persons during operation), the integrator/OEM is responsible for performing Specific Absorption Rate (SAR) testing in accordance with FCC rules 2.1093.

2.1.2. Canada (Industry Canada, IC)

The NC00E262 module has been certified for use in Canada under Industry Canada (IC) Radio Standards Specification (RSS) RSS-210 and RSS-Gen.

From section 3.2 RSS-Gen, Issue 3, December 2010, Modular Approval for Category I Equipment or Category II Equipment:

"Modular approval permits the installation of the same module in a host device or multiple host devices without the need to recertify the device. Equipment certification for a modular device may be sought for either Category I equipment or Category II equipment.

Transmitters designed as modules for the installation in a host device may obtain equipment certification as a modular device provided that the applicable RSS is met and the following conditions in this section are met."

In section 7.1.2 "Transmitter Antenna", it has been mentioned that the user manuals for transmitters shall display the following notice in a conspicuous location:

Notice: *Under Industry Canada regulations, this radio transmitter may only operate using an antenna of a type and maximum (or lesser) gain approved for the transmitter by Industry Canada. To reduce potential radio interference to other users, the antenna type and its gain should be so chosen that the equivalent isotropically radiated power (e.i.r.p.) is not more than that necessary for successful communication.*

Avis: *Sous la réglementation d'Industrie Canada, ce transmetteur radio ne peut fonctionner qu'en utilisant seulement une antenne d'un type et d'un maximum (ou moins) de gain approuvé pour l'émetteur par Industrie Canada. Pour réduire des potentielles interférences radio pour les autres utilisateurs, le type d'antenne et son gain doivent être choisis de sorte que la puissance isotrope rayonnée équivalente (PIRE) ne dépasse pas ce qui est nécessaire pour une communication réussie.*

2.1.2.1. IC Labeling Requirements

From section 3.2.1 RSS-Gen, Issue 3, December 2010, Labeling Requirements for the Host Device:

"The host device shall be properly labeled to identify the modules within the host device. The Industry Canada certification label of a module shall be clearly visible at all times when installed in the host device, otherwise the host device must be labeled to display the Industry Canada certification number of the module, preceded by the words "Contains transmitter module", or the word "Contains", or similar wording expressing the same meaning."

From section 5.2, RSS-Gen, Issue 3, December 2010, Equipment Certification Numbers and Labels:

"Every unit of Category I radio apparatus certified for marketing and use in Canada shall bear a permanent label on which is indelibly displayed the model number and Industry Canada certification number of the equipment model (transmitter, receiver, or inseparable combination thereof). Each model shall be identified by a unique combination of a model number and a certification number, which are assigned as described below in this section.

The label shall be securely affixed to a permanently attached part of the device, in a location where it is visible or easily accessible to the user, and shall not be readily detachable. The label shall be sufficiently durable to remain fully legible and intact on the device in all normal conditions of use throughout the device's expected lifetime. These requirements may be met either by a separate label or nameplate permanently

attached to the device or by permanently imprinting or impressing the label directly onto the device.

The label text shall be legible without the aid of magnification, but is not required to be larger than 8-point font size. If the device is too small to meet this condition, the label information may be included in the user manual upon agreement with Industry Canada."

Section 5.2 continues:

"The model number is assigned by the applicant and shall be unique to each model of radio apparatus under that applicant's responsibility. The model number shall be displayed on the label preceded by the text: "Model:", so it appears as follows:

Model: model number assigned by applicant"

Label:

Contains/Contient IC: 27869-NC00E262 Notice: This device complies with Industry Canada licence-exempt RSS standard(s). Operation is subject to the following two conditions: (1) this device may not cause interference, and (2) this device must accept any interference, including interference that may cause undesired operation of the device. Avis: Cet appareil est conforme avec Industrie Canada RSS standard exempts de licence (s). Son fonctionnement est soumis aux deux conditions suivantes: (1) cet appareil ne peut pas provoquer d'interférences et (2) cet appareil doit accepter toute interférence, y compris les interférences qui peuvent causer un mauvais fonctionnement du dispositif.

From section 7.1.4, RSS-Gen, Issue 3, December 2010, Radio Apparatus Containing Digital Circuits (ICES-003):

"Radio apparatus containing digital circuitry which can function separately from the operation of a transmitter or an associated transmitter, shall comply with ICES-003. In such cases, the labeling requirements of the applicable RSS apply, rather than the labelling requirements in ICES-003."

For more information see: Industry Canada: http://www.ic.gc.ca/

2.1.2.2. RF Exposure

All transmitters regulated by IC must comply with RF exposure limits as set forth in RSS-102, Issue 4, Section 4, “Exposure Limits”. Furthermore RSS-102, Issue 4, Section 2 “Certification Requirements”, provides assistance in determining the specific requirements for compliance. If appropriate, compliance with exposure guidelines for mobile and unlicensed devices can be accomplished by the use of warning labels and by providing users with information concerning minimum separation distances from transmitting structures and proper installation of antennas.

The following statement must be included as a CAUTION statement in manuals and OEM products to alert users of IC RF Exposure compliance:

> **Notice:** To satisfy IC RF Exposure requirements for mobile and base station transmission devices, a separation distance of 2.5 cm or more should be maintained between the antenna of this device and persons during operation. To ensure compliance, operation at closer than this distance is not recommended. The antenna(s) used for this transmitter must not be co-located or operating in conjunction with any other antenna or transmitter.
>
> **Avis:** Pour répondre à la IC d'exposition pour les besoins de base et mobiles dispositifs de transmission de la station, sur une distance de séparation de 20 cm ou plus doit être maintenue entre l'antenne de cet appareil et les personnes en cours de fonctionnement. Pour assurer le respect, l'exploitation de plus près à cette distance n'est pas recommandée. L'antenne (s) utilize pour cet émetteur ne doit pas être co-localisés ou fonctionner conjointement avec une autre antenne ou transmetteur.

If the NC00E262 module is used in a portable application (antenna is less than 2.5 cm from persons during operation), the integrator/OEM is responsible for performing Specific Absorption Rate (SAR) testing in accordance with IC rules and methods of RSS-102.

2.1.3. Europe (Conformité Européenne, CE)

The NC00E262 module has been certified for use in European countries covered by ETSI regulations. The following tests have been performed and the module found to be compliant to the requirements:

- Test standard ETSI EN 300 328 V2.2.2 (2019-07)
  - ✓ RF Output Power
  - ✓ Duty Cycle
  - ✓ Occupied Bandwidth
  - ✓ Spectral Power Density
  - ✓ Transmitter Spurious Emissions
  - ✓ Receiver Spurious Emissions
- Electrostatic Discharge and RF Immunity (ETSI EN 301 489-17)
- RF Exposure (ETSI EN 62311:2019)
- Safety (IEC 60950-1:2005+AMD1:2009+AMD2:2013 CSV)

A helpful document that can be a starting point in understanding the use of short range devices (SRD) in Europe is the European Radio Communications Committee (ERC) Recommendation 70-03 E, downloadable from the European Radio Communications Office (ERO) http://www.erodocdb.dk/Docs/doc98/official/pdf/REC7003E.PDF.

The end user is responsible for ensuring compliance with harmonized frequencies and labeling requirements for each country the end device is marketed and sold. For more information see:

- Radio And Telecommunications Terminal Equipment (R&TTE)
  http://ec.europa.eu/enterprise/sectors/rtte/index_en.htm

- European Conference of Postal and Telecommunications Administrations (CEPT)
  http://www.cept.org/

- European Telecommunications Standards Institute (ETSI)
  http://www.etsi.org/

- European Communications Office (ECO)
  http://www.cept.org/eco

2.2. Potential Interference Sources

The two main mechanisms that allow a PurePath wireless system to co-exist amicably in close proximity to other 2.4 GHz radio systems are:

- The adaptive frequency hopping scheme described in section 2.2 that ensures that RF channels used by other radio systems are avoided.
- Adaptive listen-before-talk mechanism that measures energy in RF channel before transmitting and avoids transmitting if the channel is already in use.

These mechanisms together ensure that other radio systems are minimally impacted by a PurePath Wireless audio network in normal circumstances. However, since a low-latency audio network by its very nature transports a very time-critical data stream, both mechanisms have adaptive thresholds to ensure that the audio network is given its fair share of RF spectrum in very crowded RF environments.

2.3. Approved Usage

The NC00E262 module has been approved for use in the US, Canada and Europe. The user is encouraged to use minimum power required to establish a link, thus minimizing interference.

Changes or modifications to the module and/or operation outside the limits are prohibited and could void the user's authority to operate the modules.

2.3.1. US and Canada

Within the US and Canada, the NC00E262 modules have been approved for use as digitally modulated transmitters, for which they conform to the BW (a minimum of 500 kHz 6-dB BW for US, a maximum BW of 0.5% of the carrier frequency for Canada), power spectral density (max of 8 dBm / 3 kHz), total output power (max of 1W including the antenna gain) and spurious radiation (harmonics and others including the restricted bands) requirements.

The NC00E262 module has been approved for use up to the maximum available power level (**power setting of +5 dBm**). However, the user is encouraged to use the minimum RF output power required to establish a link in order to minimize interference.

2.3.2. Europe

For Europe, the maximum power is 100mW with a maximum spectral power density of 10mW/MHz. In order to meet these requirements, the NC00E262 module's output power level must be kept at or below the **power setting of +5 dBm**.

3. Electrical Characteristics

3.1. Absolute Maximum Ratings

Under no circumstances must the absolute maximum ratings given in Table 3 be violated. Stress exceeding one or more of the limiting values may cause permanent damage to the device.

Caution!

ESD sensitive device. Precaution should be used when handling the device in order to prevent permanent damage.

Caution!

This assembly contains moisture sensitive devices and requires proper handling per IPC/JEDEC J-STD-033

MSL 3

Table 3 Absolute Maximum Ratings

Parameter	Min	Max	Unit	Condition/Note
Supply Voltage (Vdd)	-0.3	3.6	V	N/A
Voltage on any digital pin	-0.3	Vdd+0.3, max 3.6	V	N/A
RF input power	N/A	0	dBm	N/A
Storage Temperature	-50	120	˚C	N/A
Solder reflow temperature	N/A	260	˚C	According to IPC/JEDEC J-STD-020D
ESD	N/A	<500	V	According to JEDEC STD 22, method A114, human body model
ESD	N/A	400	V	According to JEDEC STD 22, C101C, Charged Device Model (CDM)

3.2. Operating Conditions

Table 4 Operating Conditions

Parameter	Min	Max	Unit	Condition/Note
Supply Voltage (Vdd)	2.2	3.6	V	N/A
Supply Voltage (IOVdd)	1.8	3.6	V	N/A
Temperature Range	-40	+85	˚C	N/A

3.3. Pinout

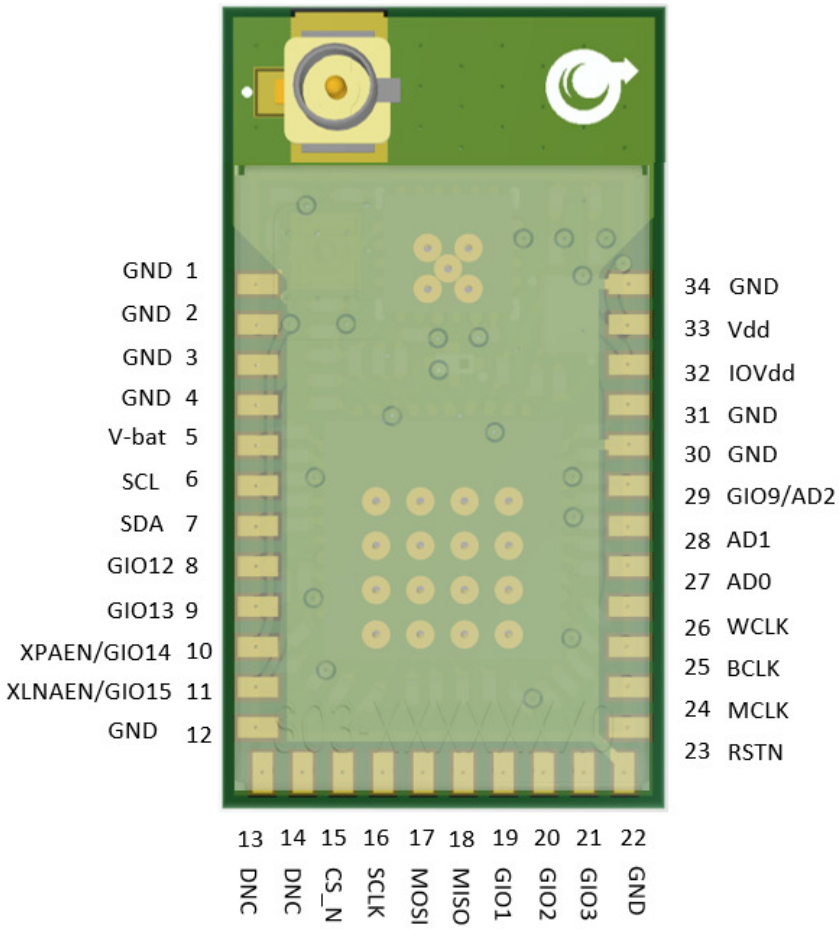

Figure 4. NC00E262 pinout (top view)

DNC = **DO NOT CONNECT**. Internal connection used during assembly.

Table 5. Pinout descriptions

Pin Number	Pin Name	Pin Type	Description
1	GND	Common Ground	N/A
2	GND	Common Ground	N/A
3	GND	Common Ground	N/A
4	GND	Common Ground	N/A
5	VBAT	Analog Input	Battery voltage supervisor input.
6	SCL, GIO10	Digital I/O	I^2C master clock. External pull-up resistor required. General purpose digital I/O pin 10.
7	SDA,GIO11	Digital I/O	I^2C data. External pull-up resistor required. General purpose digital I/O pin 11.

8	GIO12	Digital I/O	General purpose digital I/O pin 12.
9	GIO13	Digital I/O	General purpose digital I/O pin 13.
10	XPAEN/PAEN	Digital I/O	External power amplifier control for the Front End Module.
11	XLNAEN/LNAEN	Digital I/O	External low-noise amplifier/receive bypass control for Front End Module.
12	GND	Common Ground	N/A
13	DNC	Digital I/O	External differential antenna diversity control. Unused.
14	DNC	Digital I/O	External differential antenna diversity control. Unused.
15	CS_N	Digital Input (pull-up)	Active-low chip select for SPI interface
16	SCLK	Digital I/O	Master clock for SPI interface
17	MOSI	Digital I/O	Master Out Slave In for SPI interface
18	MISO	Digital I/O	Master In Slave Out for SPI interface
19	GIO1	Digital I/O	General purpose digital I/O pin 1. Configurable with PurePath™ Wireless Configurator.
20	GIO2	Digital I/O	General purpose digital I/O pin 2.
21	GIO3	Digital I/O	General purpose digital I/O pin 3. Configurable with PurePath™ Wireless Configurator.
22	GND	Common Ground	N/A
23	RSTN	Digital Input (pull-up)	Active-low device reset.
24	MCLK	Digital I/O	I^2S Master Clock (GIO4).
25	BCLK	Digital I/O	I^2S Bit Clock (GIO5).
26	WCLK	Digital I/O	I^2S Word Clock (GIO6).
27	AD0	Digital I/O	I^2S Data Line I/O (GIO7).
28	AD1	Digital I/O	I^2S Data Line I/O (GIO8).
29	AD2	Digital I/O	I^2S Data Line I/O (GIO9). Configurable with PurePath™ Wireless Configurator.
30	GND	Common Ground	N/A
31	GND	Common Ground	N/A
32	IOVDD	Digital Power Input	Power supply input for digital core. Powers the GIOs, SPI, I^2C and I^2S. Requires 1.8V to 3.6V.
33	AVDD	Analog Power Input	Power supply input for analog core. Powers the radio and PA/LNA. Requires 2.0V to 3.6V.
34	GND	Common Ground	N/A

3.4. Recommended layout

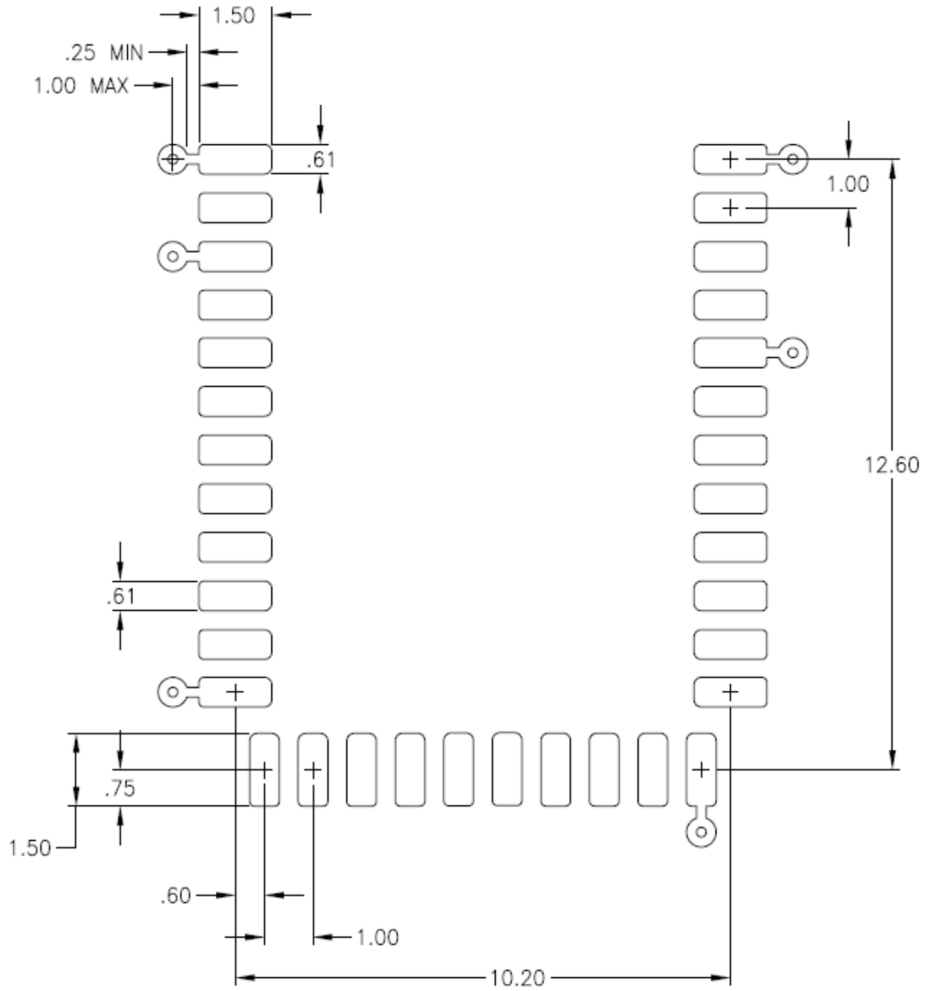

Figure 5 Recommended PCB footprint layout

Tips for module placement:

- Place the module along an edge of the PCB.
- Place a ground via next to each ground pin on the module.
- Keep any external metal (i.e. screws, batteries, etc.) a minimum of 3 cm away from the u.FL connector. Unintentional RF coupling will degrade module performance.

3.5. Antenna Placement Considerations

The placement of the external antenna is critical to ensure optimal wireless performance and to minimize potential interference.

Tips for external antenna placement:

- Keep any external metal (i.e. screws, batteries, etc.) a minimum of 3 cm away from the antenna. Unintentional RF coupling will degrade antenna performance.
- Keep the antenna as far away from the body as possible. Unintentional RF coupling will degrade antenna performance.

3.6. Power Supply Considerations

Noise on the power supply line reduces the sensitivity of a receiver and can modulate onto a transmitters signal, both of which causes a degradation of link quality and hence a reduction in range.

The NC00E262 radio modules have integral noise reduction in the supply line from pins 33 (Vdd) and 32 (IOVdd), consisting of ferrite beads and decoupling capacitances. This arrangement will take care of most supply voltage noise. For optimal performance in particular noisy environments (switching regulators, motor controls, etc.), it may be necessary to add additional noise reduction means, which can consist of a low noise LDO or additional LC filtering.

If the level measured is exceeding the above limit means should be taken to ensure maximum range:

- Add decoupling capacitance to pin 33 (AVdd), a 1uF to 2.2uF ceramic capacitor is suggested. Do not use tantalum capacitors.
- Add a low noise LDO in the supply line to pin 33 (AVdd). The TI TPS731xx is recommended.

Note that if operated from a battery source there is no need for additional noise reduction. Also note that if the noise source can be synchronized to be off whenever the module is transmitting or receiving (using XPAEN and XLNAEN) then that will also suffice.

4. Mechanical and Process

4.1. Radio Module Details

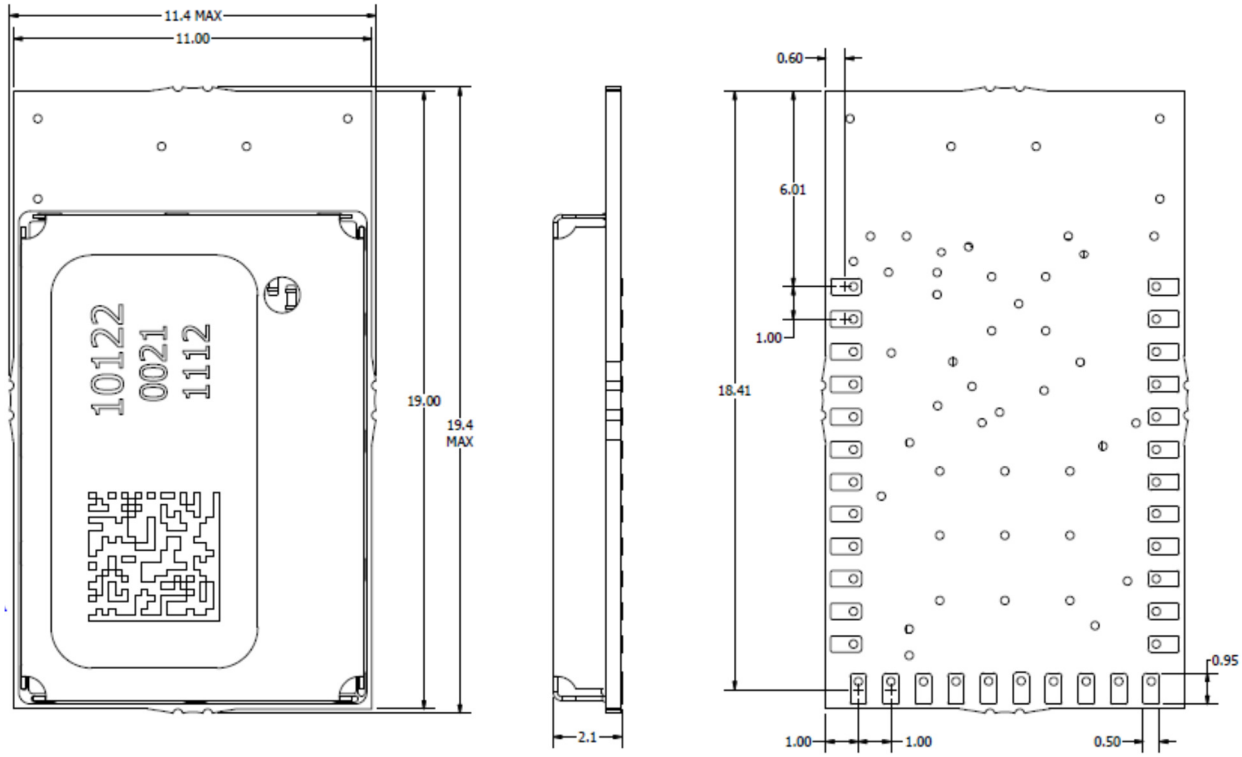

4.2. Soldering

NC00E262 modules may be mounted either manually for prototyping or low-volume production or automatically for high-volume production.
A no-clean tin/silver/copper (SAC) solder is recommended, however lead-based, no-clean pastes may also be used.

CAUTION: NC00E262 modules are designed for no-clean fluxes only. DO NOT use water-based fluxes that require aqueous cleaning after solder. Spot cleaning with a flux remover and toothbrush may be performed with care.

4.2.1. Manual Mounting Procedure

The recommended soldering method is reflowing of a paste solder on a hot plate. This method works provided the bottom of the board where the NC00E262 is to be mounted is accessible, and there are no bottom-side components in the way.

An aluminum or copper block may be placed on the hot plate surface to transfer heat to a localized area on the board where the NC00E262 is mounted:

- Set the hot plate to the reflow temperature solder manufacturer's recommended
- Apply solder paste to the pads on the board receiving the NC00E262

- Place the NC00E262 carefully onto the dispensed solder
- Using tweezers or another holding device, carefully place board with NC00E262 onto the hot plate surface (or metal block)
- Apply heat until reflow occurs, per solder paste manufacturer's recommendations
- Carefully remove the board and place on a heat-resistant surface to cool
- Check assembly electrically to confirm there are no opens or shorts

4.2.2. Automated Mounting Procedure

NC00E262 module recommended solder reflow profile is based on IPC/JEDEC J-STD-020.

Table 5-2 Classification Reflow Profiles

Profile Feature	Sn-Pb Eutectic Assembly	Pb-Free Assembly
Average ramp-up rate (Tsmax to Tp)	3° C/second max.	3° C/second max.
Preheat - Temperature Min (Ts_{min}) - Temperature Max (Ts_{max}) - Time (Ts_{min} to Ts_{max}) (ts)	 100 °C 150 °C 60-120 seconds	 150 °C 200 °C 60-180 seconds
Time maintained above: - Temperature (T_L) - Time (t_L)	 183 °C 60-150 seconds	 217 °C 60-150 seconds
Peak Temperature (Tp)	See Table 4.1	See Table 4.2
Time within 5°C of actual Peak Temperature (tp)[2]	10-30 seconds	20-40 seconds
Ramp-down Rate	6 °C/second max.	6 °C/second max.
Time 25°C to Peak Temperature	6 minutes max.	8 minutes max.

Note 1: All temperatures refer to topside of the package, measured on the package body surface.
Note 2: Time within 5 °C of actual peak temperature (tp) specified for the reflow profiles is a "supplier" minimum and "user" maximum.

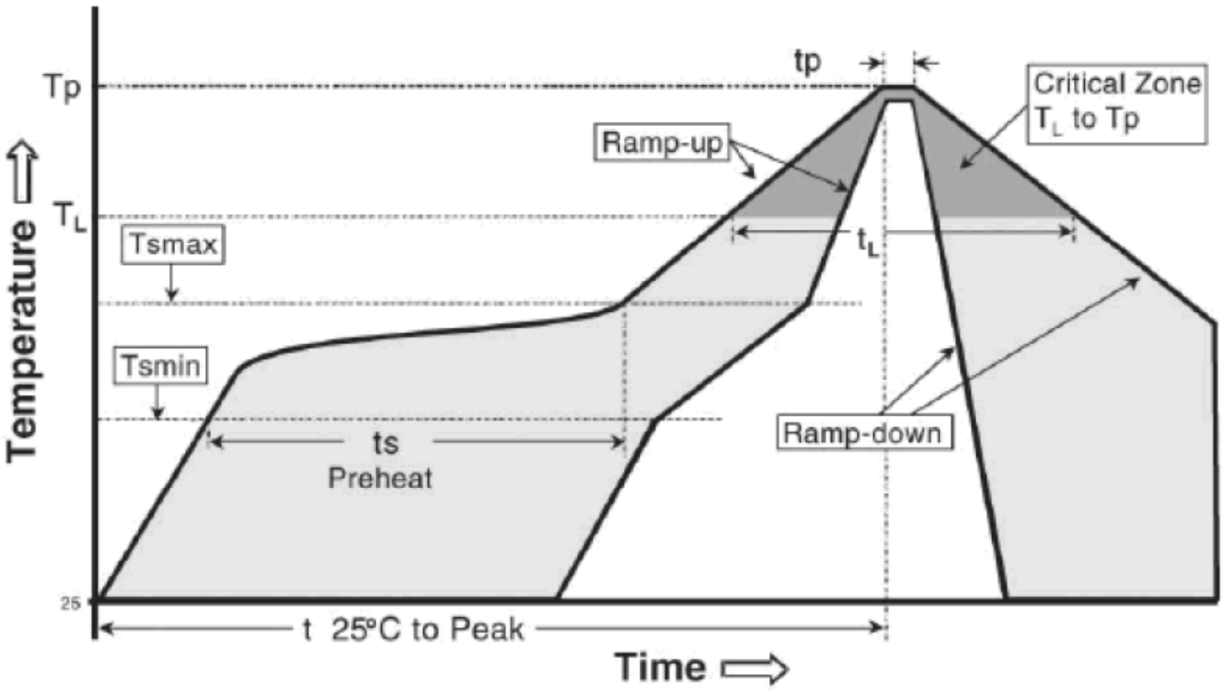

Classification Reflow Profile

SnPb Eutectic Process - Package Peak Reflow Temperatures

Package Thickness	Volume mm^3 <350	Volume mm^3 ≥ 350
<2.5 mm	240 +0/-5 °C	225 +0/-5°C
≥ 2.5 mm	225 +0/-5°C	225 +0/-5°C

Pb-free Process - Package Peak Reflow Temperatures

Package Thickness	Volume mm^3 < 350	Volume mm^3 350 - 2000	Volume mm^3 > 2000
< 1.6 mm	260 °C *	260 °C *	260 °C *
1.6 mm - 2.5 mm	260 °C *	250 °C *	245 °C *
> 2.5 mm	250 °C *	245 °C *	245 °C *
* Tolerance: The device manufacturer/supplier shall assure process compatibility up to and including the stated classification temperature at the rated MSL level			

5. Configuration and Programming

   The integrator of this module into an application must program the module to match both the CODEC IC used and the human interface methods employed. To do this, the integrator must use the PurePath™ software from TI to configure the module.

5.1. Calibrating Transmit Power

This power calibration number is an approximate power output value in dBm for the CC85xx chip.

It can be useful to set a lower power for systems that do not require the full range and thus save on power consumption. The typical power consumption at 3.3V supply for a NC00E262 module is shown below depending on the output power setting.

Table 6 Transmit Power Settings

PurePath Power Setting	Module Output Power (Approximate)	Peak Current Consumption	Average Current Consumption [mA] @ 3.3V AVdd, IOVdd, Ambient Temperature*	
[dBm]	[dBm]	[mA]	Master	Slave
+5	+5	58	52	39
+4	+4	57	52	39
+3	+3	56	51	39
+2	+2	54	50	38
+1	+1	54	49	38
0	0	54	48	38
-1	-1	53	48	38
-2	-2	53	48	37
-3	-3	53	48	37
-4	-4	52	48	37
-5	-5	52	48	37
-6	-6	52	48	36
-7	-7	51	47	36
-8	-8	51	47	36
-9	-9	51	47	36
-10	-10	51	47	35

*PurePath in stereo audio mode and TLV320AIC3204 (SR = 44.1 kHz, ENC=PCM16)

On the Radio page for both master and slave in PurePath™ Wireless Configurator, both master and slave target TX power must be set at a permissible power level. The maximum permissible power setting for US, Canada and Europe is +5 dBm. Figure 11 indicates the location for setting the module output power. PurePath Wireless Configurator 1.4.2.38775 has been used for the current measurements.

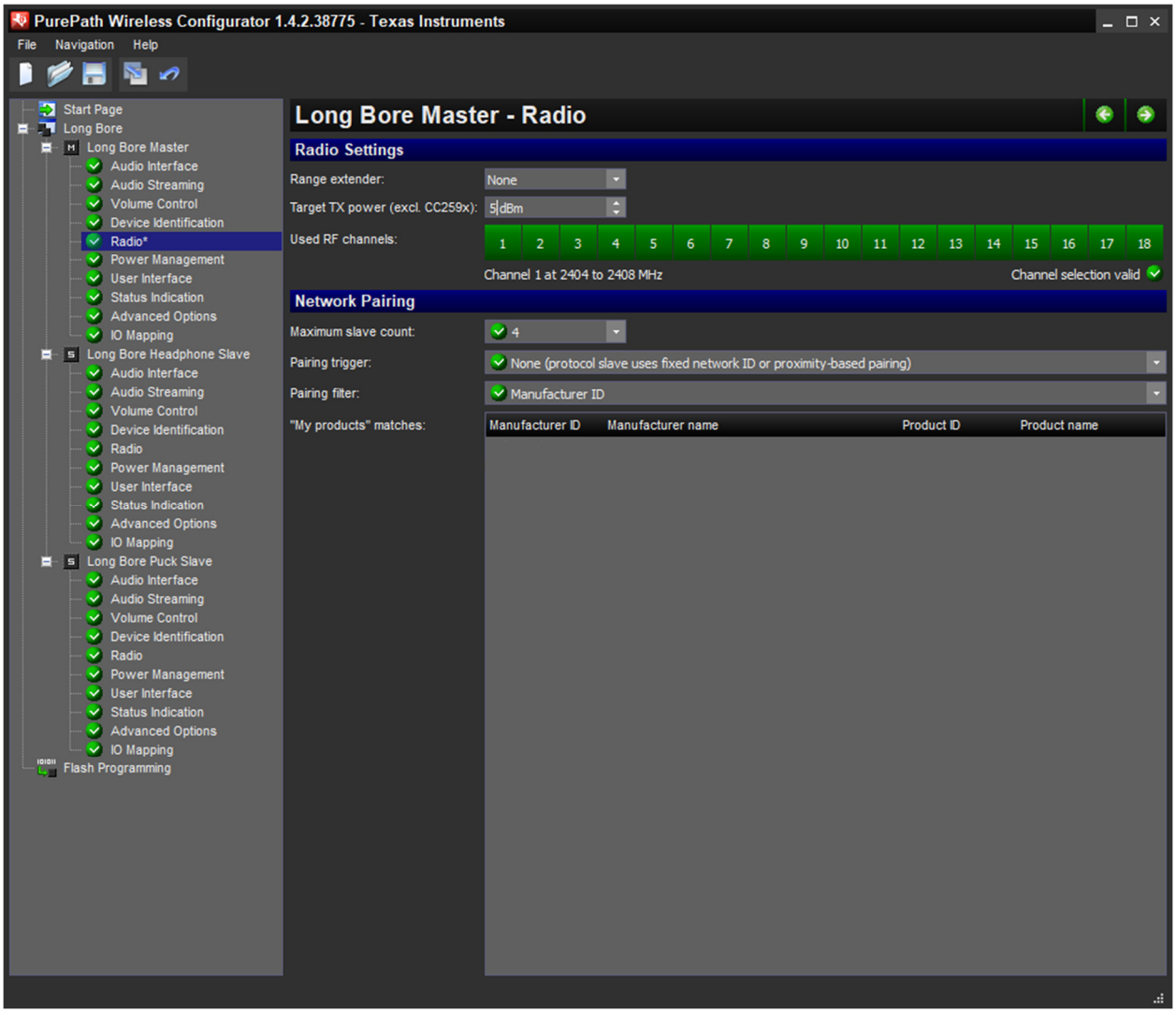

Figure 6 PurePath Wireless Configurator

Alternatively, the power calibration can be done immediately after programming of each module using the SPI host controller interface, using the CAL_SET_DATA function. This option is useful if the same image will be used in multiple equipment, of which some have the power turned down further than the max allowed power level to save current consumption, however it requires a host processor.

5.2. Programming

The desired application image can be programmed into the module either using the PurePath™ software and the included CC-Debugger. Or the PurePath™ software can be used to create the desired image, which is saved and the integrator can use an in-house developed production programmer to upload the image.

If developing an in-house programmer there are a few things to consider to successfully program the CC8520 chip. Programming procedure:

```
// Enter the bootloader
BOOT_RESET();
BL_UNLOCK_SPI();
Check SWR Proceed only if SWR matches required value (Reset device and Restart programming again)
// Erase the flash
BL_FLASH_MASS_ERASE();
Check SWR Proceed only if SWR matches required value (Reset device and Restart programming again)
// For each flash page
for (int n = 0; n < 31; n++) {
// Write page data to the start of the available RAM area
SET_ADDR(0x6000, sw);
WRITE(0x400, data to be programmed into flash page n , sw);
/* While using the image generated by TI- Purepath Wireless Configurator, note that the entire image file generated by PWC-TI is Intel_hex format. For programming 8520 module use only the data and discard additional data/information */
// Program the page
BL_FLASH_PROG_PAGE(RAM_ADDR = 0x6000, FLASH_ADDR = 0x8000+(n*0x400))
Check SWR Proceed only if SWR matches required value wait till the block is completely transferred
}
// Verify the flash contents
BL_FLASH_VERIFY(BYTE_COUNT = value read from the HEX file );
/* The flash verify byte count data is 4 byte value stored from location &h 8010 within the image file */

Check SWR Proceed only if SWR matches required value (Reset device and Restart programming again)
SYS_RESET()
// Done, perform SYS_RESET() to start the application
```

If the status word read fails immediately after execution of BOOT_RESET or BL_UNLOCK_SPI then it is most likely due to the special SPI requirement during these instructions as MISO must go low and then high after the SPI clock sequence as shown in the figure below.

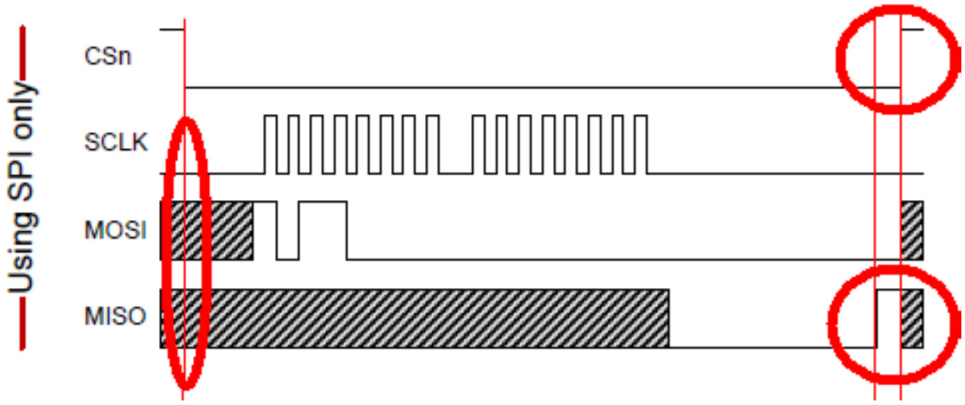

If the SPI bus controller is unable to perform this wait, then use the SPI pins as GPIO's and manually program the bit sequences as described below for the BOOT_RESET().

Procedure for programming Boot_Reset()

1. Assert CSn Low and then clock the SCL with each negative edge of clock asset the logic level to high or low on MOSI pin.

2. After sending &H B0 00 on MOSI pin. Wait till MISO pin goes high. Note: Status check/update is done between MISO and CSn pin going high. If this time is not sufficient. This will lead to error in SWR read value.

Once BOOT_RESET is successful then switch to normal SPI operation mode.

Please refer to the TI CC85xx Application Design Reference Guide for more information.

Revision History

Rev	Date	Author	Description	ECO
A	2-3-2022	E. Jen	Initial Release	N/A