MG223, BLE Transmitter

Data Sheet

Macrogiga Electronics

Revision History:

Rev. No.	History	Issue Date	Remark
0.1	Draft	Nov 15, 2020	
0.2	Update Electrical Characteristics	Dec 25, 2020	
1.0	Update package info	July 23, 2021	Release

Important Notice:
MACROGIGA reserves the right to make changes to its products or to discontinue any integrated circuit product or service without notice. MACROGIGA integrated circuit products are not designed, intended, authorized, or warranted to be suitable for use in life-support applications, devices or systems or other critical applications. Use in such applications is done at the sole discretion of the customer. MACROGIGA will not warrant the use of its devices in such applications.

Table of Contents

1. Overview....3
1.1 Features....3
1.2 Typical Application....4
1.3 Block Diagram....5
2. Pin Description....5
3. Example Application Schematic....6
4. Operating modes....6
5. Data and Control Interface....6
5.1 Features....7
5.2 I2C....7
5.3 SPI Timing....7
6. Register Map....8
7. Electrical Characteristic....8
8. Current Consumption....9
9. Package Information....9
10. Reflow Profile....11

Macrogiga Electronics

1. Overview

MG223 is a single mode BLE RF transmitter with software configurable registers, embedded packet handling engine, and designed for ultra low power Bluetooth Smart Devices.

The chip is configured and operated via the 3-wire SPI(Serial Peripheral Interface) or I2C interface.

Internal voltage regulators ensure a high Power Supply Rejection Ratio (PSRR) and a wide power supply range(2.0~3.6V).

MG223 is pin-to-pin compatible with MG123.

1.1 Features

- Radio

Worldwide 2.4GHz ISM band operation with 2MHz channel spacing

GFSK modulation

Support 1Mbps and 2Mbps air data rate

- Transmitter

Programmable output power: -20 ~ +3.5 dBm, without an external RF PA

14.5mA at 0dBm output power

- Baseband

Dedicated logic performs:

Cyclic redundancy check

Data whitening

Access code correlation

- Host Interface

Macrogiga Electronics

3-wire hardware SPI, Max 10Mbps

I2C interface

- Power Management

Integrated voltage regulator

2.0 to 3.6V supply range

Idle modes with fast start-up times for advanced power management

4uA in sleep mode

0.2uA in standby mode

- Low cost BOM

Provides a single-ended RF port pin

No matching components needed

Built-in 32KHz oscillator

Support low cost crystal(16MHz)

1.2 Typical Application

- Beacon transmitter
- Remote Controller

Macrogiga Electronics

1.3 Block Diagram

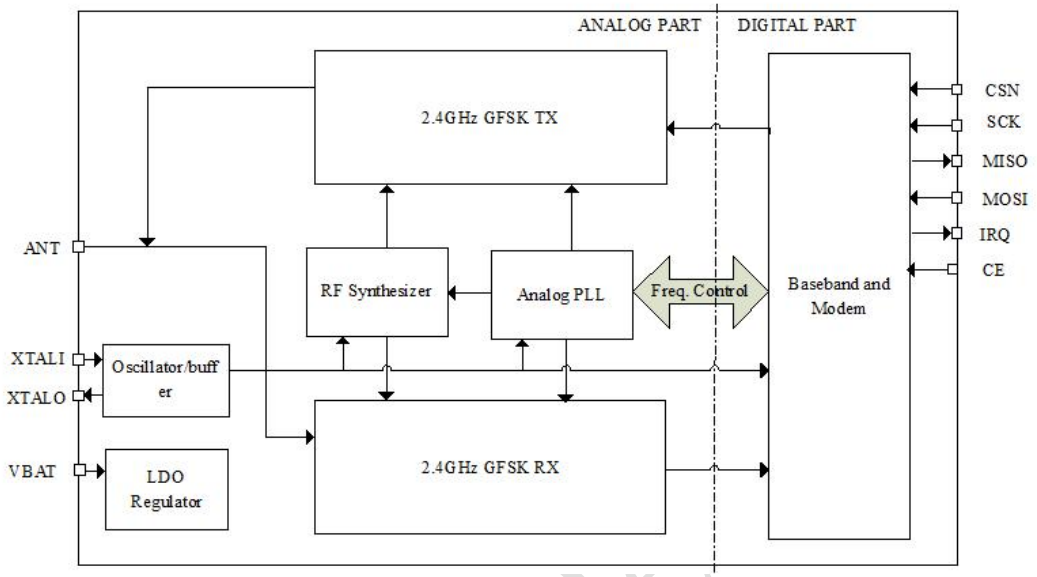

Figure1.1 Block Diagram

2. Pin Description

Pin No.	Symbol	I/O	Function Description
1	SCK	DI	SPI Clock / I2C_SCL
2	DVDD	AO	Digital VDD 1.2v Output
3	MOSI	DI	SPI Slave Data Input / I2C_SDA
4	XTALO	AO	Crystal Pin
5	XTALI	AI	Crystal Pin
6	ANT	RF	Antenna interface
7	GND	Power	Ground(0V)
8	VBAT	Power	Power Supply
9	nRST	AI	Chip reset pin
10	CSN	DI	SPI Chip Select

Table2.1 Pin Description

MacroGiga Ele

3. Example Application Schematic

MG223 with single ended RF output, crystal and decoupling capacitors.

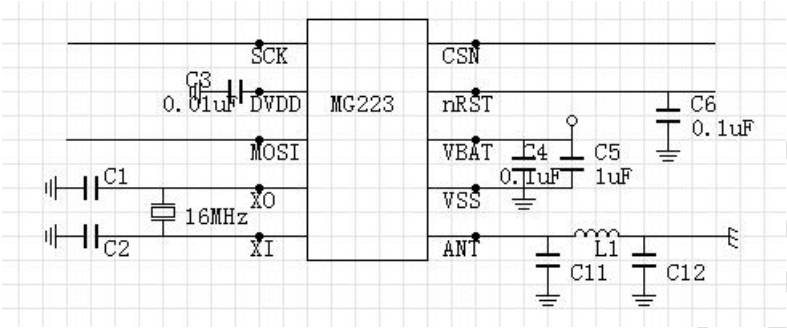

Figure 3.1 Example Application Schematic(SPI)

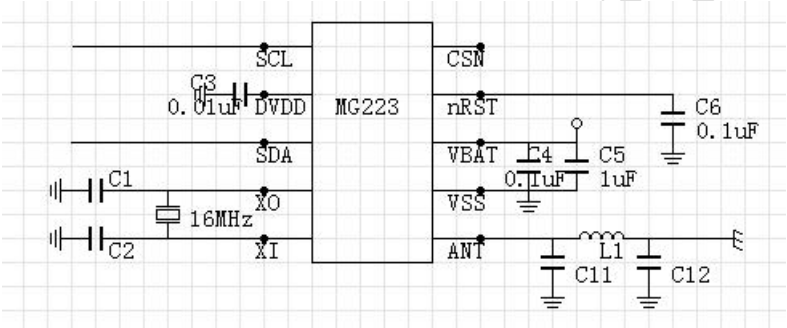

Figure 3.2 Example Application Schematic(I2C)

4. Operating modes

The chip has 3 operating modes:

- Standby
- Sleep
- TX active

5. Data and Control Interface

The data and control interface gives you access to all the features in the chip. The data and control interface consists of the following digital signals:

- CSN (SPI_CS signal)
- SCK (SPI_SCK or I2C_SCL)
- MOSI (SPI data or I2C_SDA)

5.1 Features

- 3-wire SPI serial interface, as slave, up to 10Mbps data rate
- I2C interface
- Easily configurable register map

5.2 I2C

When working in I2C, CSN pin should leave floating (Not Connected)。

5.3 SPI Timing

SPI operation and timing is given in Figure 5.3.1. The device must be in one of the standby modes or sleep mode before writing to the configuration registers.

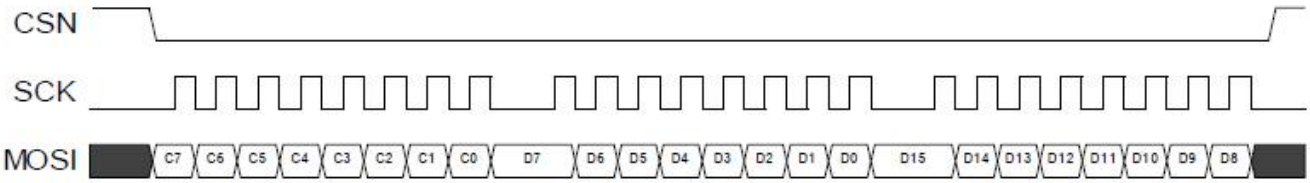

Figure 5.3.1 SPI read/write operation

MacroGiga Electronics

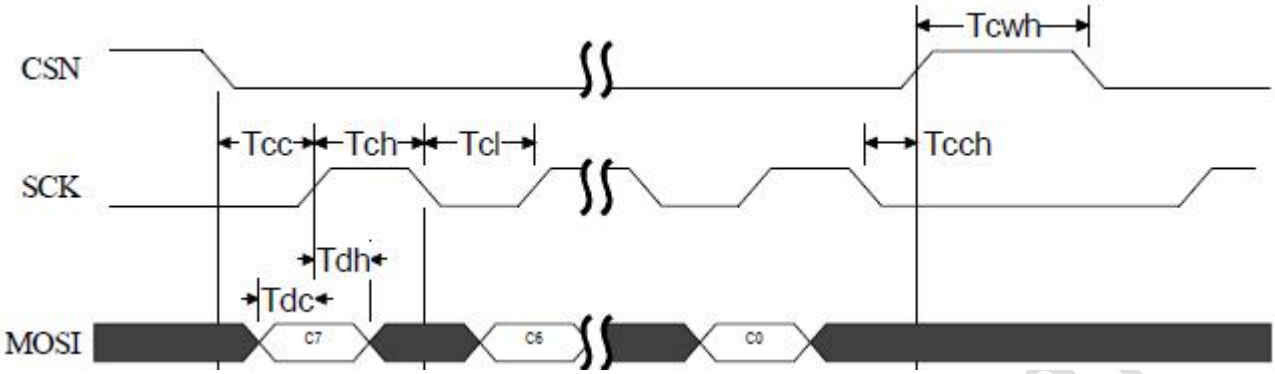

Figure 5.3.2 SPI timing diagram

Symbol	Parameters	Min.	Max	Unit
Tcc	CSN to SCK setup	2	-	ns
Tch	SCK high time	40	-	ns
Tcl	SCK low time	40	-	ns
Tcwh	CSN inactive time	50	-	ns
Tcch	SCK to CSN hold	2	-	ns
Tdc	Data to SCK setup	2	-	ns
Tdh	SCK to Data hold	2	-	ns

6. Register Map

You can configure and control the radio chip by accessing the register map through SPI or I2C by using read and write commands.

7. Electrical Characteristics

Conditions: VDD = +3V, VSS = 0V, TA = - 40ºC to + 85ºC

Symbol	Parameter	Notes	Min.	Typ.	Max.	Unit
	Operating Conditions					

Macrogiga Electronics

VDD	Supply voltage		2.0	3.0	3.6	V
TEMP	Operating Temperature		-40	+27	+85	℃
	General RF condition					
f_{OP}	Operating frequency		2402		2480	MHz
R_{GFSK}	Air data rate			1, 2		Mbps
$F_{channel}$	Non-overlapping channel spacing			2		MHz
	Transmitter Operation condition					
P_{RF}	Maximum output power				+3.5	dBm
	Power on Reset					
T_{POR}	Power on reset time		1.5	5.3	10.3	ms

Table 7.1 Electrical Specification

8. Current Consumption

Table 8.1 shows total typical current consumption measured at the battery.

Mode	Description	Total Typical Current at 3.3v
Sleep	Idle state, no TX, no RX	4 uA
standby	Deepsleep mode. Wakeup through nRST	0.2 uA
TX active	In transmitting	14.5 mA @ 0dBm output power

Table 8.1 Current Consumption

9. Package Information

MSOP10

MacroGiga Electronics

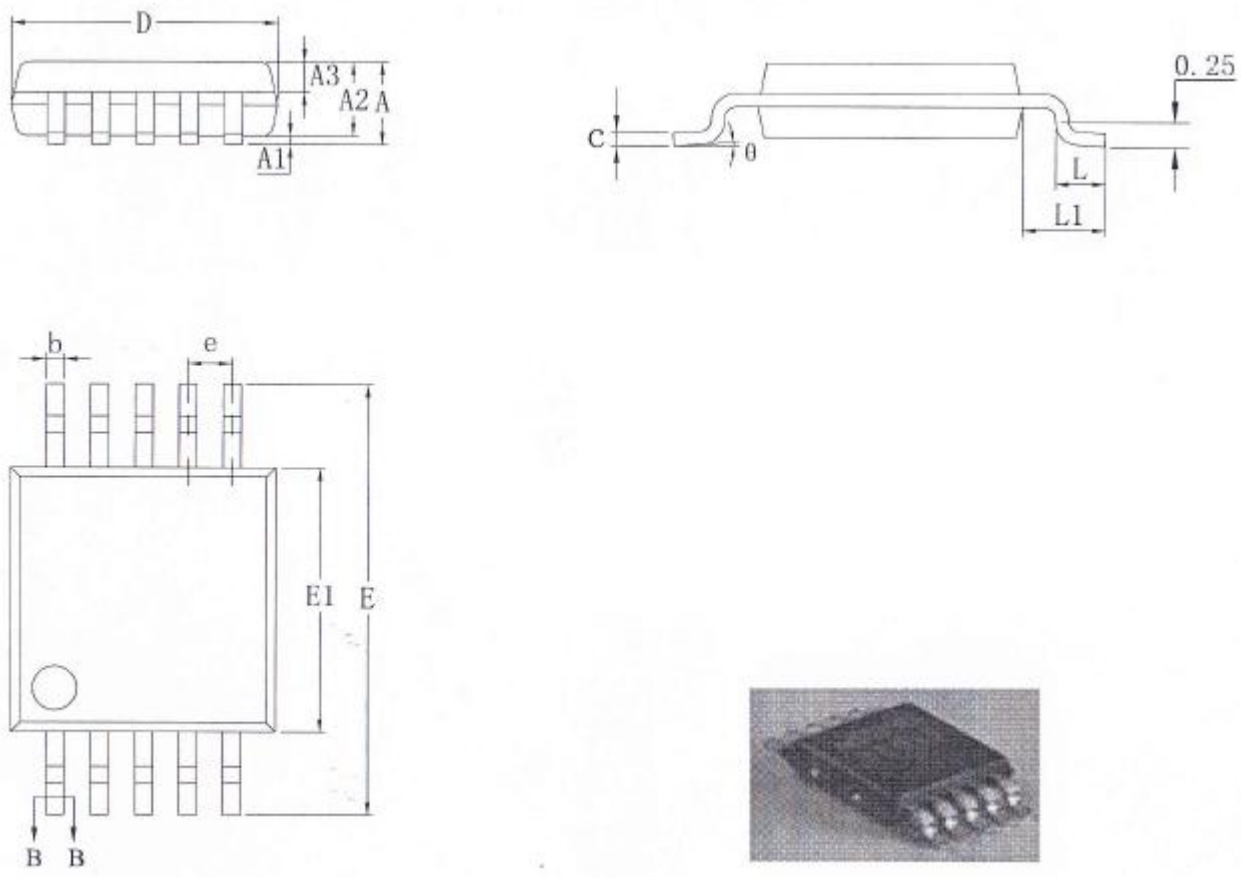

Table 9.1 MSOP10 Package outline

Symbol	Dimensions in Millimeters		
	Min.	NOM	Max.
A	0.82	-	1.10
A1	0.02	-	0.15
A2	0.75	-	0.95
A3	0.30	0.35	0.40
D	2.90	3.00	3.10
E	4.70	4.90	5.10
E1	2.90	3.00	3.10
e	0.50BSC		
b	0.18	-	0.28
c	0.09	-	0.23
θ	0º	-	6º
L	0.40	-	0.80
L1	0.95REF		

MacroGiga

10. Reflow Profile

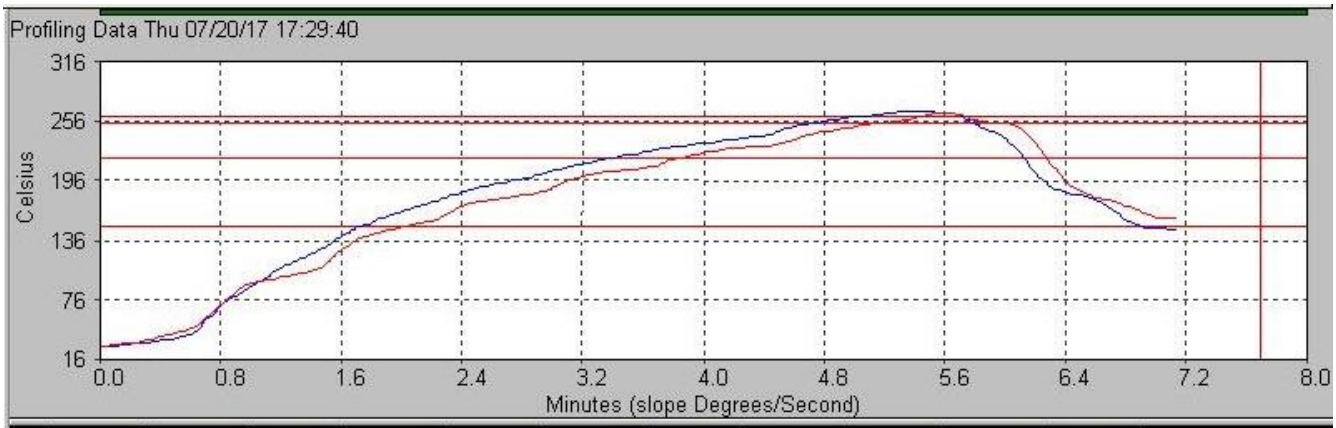

	Peak	Min	Max Rising Slope	Max Falling Slope	Total Time Above 150	Total Time Between 150/220	Total Time Above 220	Rising Time Between 220/255	Rising Time Above 255	Rising Time Between 255/260	Total Time Above 260
2	264.8	29.8	2.65	-3.11	310.03	148.25	161.78	80.57	37.56	13.23	34.17
3	263.8	30.5	2.27	-3.19	307.16	163.23	143.93	79.28	34.00	13.75	29.42
4			0.00	0.00	0.00	0.00	0.00	0.00	0.00	0.00	0.00
5			0.00	0.00	0.00	0.00	0.00	0.00	0.00	0.00	0.00
6			0.00	0.00	0.00	0.00	0.00	0.00	0.00	0.00	0.00

Automatic | Setup | Current Cell

For Help, press F1 | Product TCs com8::product/ | Lvl: Advanced

Macrogiga

Federal Communications Commission (FCC) Statement. This device complies with part 15 of the FCC Rules. Operation is subject to the following twoconditions:

(1) This device may not cause harmful interference, and

(2) this device must accept any interference received,

including interference that may cause undesired operation. Note: This equipment has been tested and found to comply with the limits for a Class B digital device, pursuant to part 15 of the FCC Rules. These limits are designed to provide Reasonable protection against harmful interference in a residential installation. This equipment generates, uses and can radiate radio frequency energy and, if not installed and used in accordance with the instructions, may cause harmful interference to radio communications. However, there is no guarantee that interference will not occur in a particular installation. If this equipment does cause harmful interference to radio or television reception, which can be determined by turning the equipment off and on, the user is encouraged to try to correct the interference by one ormore of the following measures:

•Reorient or relocate the receiving antenna.

•Increase the separation between the equipment and receiver.

•Connect the equipment into an outlet on a circuit different from that to which the receiver is connected.

•Consult the dealer or an experienced radio/TV technician for help.

Warning: Changes or modifications made to this device not expressly approved by **Shanghai MacroGiga Electronics CO.,Ltd** may void the FCC authorization to operate this device.Note: The manufacturer is not responsible for any radio or TV interference caused by unauthorized modifications to this equipment. Such modifications could void the user's authority to operate the equipment.

RF exposure statement:

This device complies with FCC RF radiation exposure limits set forth for an uncontrolled environment. This transmitter must not be co-located or operating in conjunction with any other antenna or transmitter.

Integration instructions for host product manufacturers according to KDB 996369 D03 OEM Manual v01

2.2 List of applicable FCC rules

FCC Part 15.247.

2.3 Specific operational use conditions

This module is stand-alone modular. If the end product will involve the Multiple simultaneously transmitting condition or different operational conditions for a stand-alone modular transmitter in a host, host manufacturer have to consult with module manufacturer for the installation method in end system.

2.4 Limited module procedures

Additional testing and certification is necessary when specific host originally granted with this module.

2.5 Trace antenna designs

Not applicable. The module has its own antenna, and doesn’t need a host’s printed board microstriptrace antenna etc.

2.6 RF exposure considerations

This device complies with FCC RF radiation exposure limits set forth for an uncontrolled environment. This transmitter must not be co-located or operating in conjunction with any other antenna or transmitter.

2.7 Antennas

This radio transmitter **2A3DF-M2232110** has been approved by Federal Communications Commission to operate with the
antenna types listed below, with the maximum permissible gain indicated. Antenna types not included in this list that have a
gain greater than the maximum gain indicated for any type listed are strictly prohibited for use with this device.

Model name	Antenna type	Antenna gain
MG223_M1_V1.00	PCB	1.75dBi

2.8 Label and compliance information

The final end product must be labeled in a visible area with the following" Contains FCC ID:2A3DF-M2232110".

2.9 Information on test modes and additional testing requirements

Host Host manufacturer which install this modular with limit modular approval should perform the test of radiated emission and spurious emission according to FCC part 15C:15.247 requirement, only if the test result comply with FCC part 15.247 requirement, then the host can be sold legally.

2.10 Additional testing, Part 15 Subpart B disclaimer

The module is only FCC authorized for the specific rule parts listed on the grant, and that the host product manufacturer is responsible for compliance to any other FCC rules that apply to the host not covered by the modular transmitter grant of certification. The final host product still requires Part 15 Subpart B compliance testing with the modular transmitter installed.