GRACE

Innovation And Sustainability For Everyone

Smart string lights Dream

Model: SFA09XX-7

RGBIC+W

Dual Module Wi-Fi & Bluetooth

EASY TO SETUP | TIME SCHEDULE | DIMMABLE | REMOTE CONTROL | NO HUB REQUIRED | RGBIC+W | LINKABLE | UNIQUE DESIGN

WiFi + Bluetooth

works with alexa

works with Hey Google

Powered By tuya Intelligence Inside

01 | HIGHLIGHTS

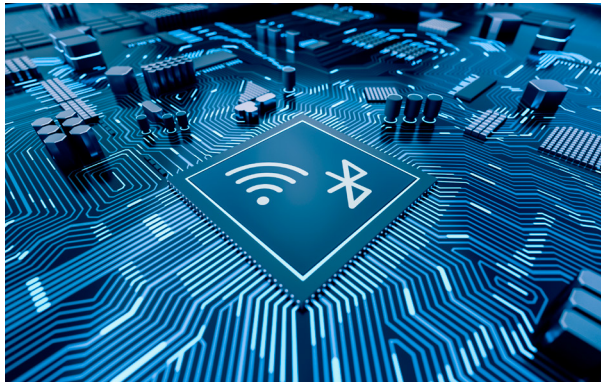

Dual Module Wi-Fi+Bluetooth

Grace Smart Outdoor String Light KAAX have the new low-power embedded Wi-Fi and BLE module developed by Tuya.

Linkable

Each string contains 12 bulbs and maximum you link 4 strings. Enjoy a total of 48 bulbs at the same time.

Multicolor RGBIC+W

Make an amazing on your guests with individually addressable 16 million-color RGBIC and White string bulb lights.

01 | HIGHLIGHTS

Individual Control by Tuya App

Manage independently the color of 4 strings light using Tuya App for incredible multicolor displays.

Dim, brighten and choose the color of your outdoor lights among millions of different color nuances and create your customized scenes.

Schedules and Groups

Put your lights on a schedule and let Kaax creates the perfect feel for your garden. Use scenes to secure your home - lights will turn on and off automatically, so that nobody can see that you're not home.

Waterproof and Durable

With IP65 waterproof rate and durable materials, it can withstand not only rain, snow, hail, and wind, but also extreme heat and cold.

01 | HIGHLIGHTS

Works with Your Voice

Use Voice Commands to control Smart Outdoor String Light. You can turn on/off, adjust light brightness and change colors through your voice.

Sync with Music

Dazzle your friends with music sync, scene, and DIY modes for a get together they'll remember.

02 | TECHNICAL SPECIFICATION

Model: Smart Outdoor String Lights KAAX

Voltage: 12V

Voltage Frequency: 50/60Hz

Power: 6W

Power Supply: 100-240V 50/60Hz 12V 0.5A/1A/2A

Luminous Flux: 110lm

LED Chip Source: RGB SMD3030+WW SMD2835

LED Qty.: Each Bulb 3PCS RGB+1PCS WW

Color Temp.: RGBIC+W

Working Temp.: -20°C~45°C

Working Humidity: < 96%

Wi-Fi Protocol: 2.4GHz

Wi-Fi Standard: IEEE 802.11b/g/n

Bluetooth Protocol: 4.2

Bluetooth Standard: IEEE 802.15.1

IP Rate: IP65(for String Lights)

IP44(for adpter&controller)

PF: >0.5 / **DF:** ⩾0.5

Beam Angle: 20°

Lifespan: 20000Hrs

Material: PC Cover+PVC Cable

Product Dimmensions: 46*46*120mm(S14 Bulb)

Power Plug Cable Length: 7.3m/24FT

Kit Net Weight: 1.5kg

Certification

03 | DRAWING

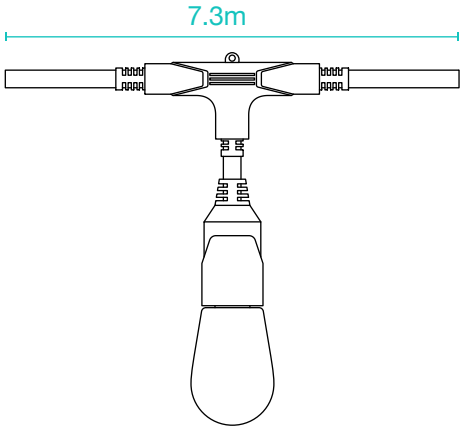

04 | PACKAGE INFO

Unit Package Content

Smart Light+Controller+Power Adapter+

Manual

Box Size	230*230*160mm

Color Box

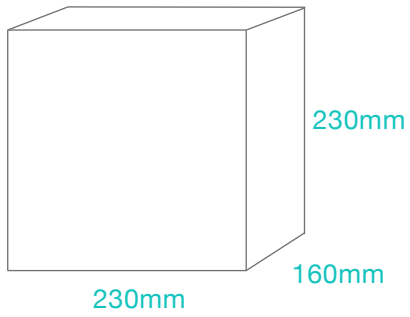

Carton Size	480*250*350mm
ESD Bag	NO
Weight Carton	6.9kg
Quantity Carton	4pcs

Master Carton

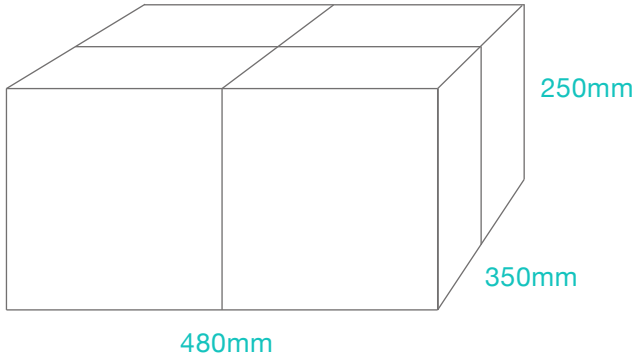

FCC Statement

This equipment has been tested and found to comply with the limits for a Class B digital device, pursuant to part 15 of the FCC Rules. These limits are designed to provide reasonable protection against harmful interference in a residential installation. This equipment generates, uses and can radiate radio frequency energy and, if not installed and used in accordance with the instructions, may cause harmful interference to radio communications. However, there is no guarantee that interference will not occur in a particular installation. If this equipment does cause harmful interference to radio or television reception, which can be determined by turning the equipment off and on, the user is encouraged to try to correct the interference by one or more of the following measures:

•Reorient or relocate the receiving antenna.

•Increase the separation between the equipment and receiver.

•Connect the equipment into an outlet on a circuit different from that to which the receiver is connected.

•Consult the dealer or an experienced radio/TV technician for help.

Caution: Any changes or modifications to this device not explicitly approved by manufacturer could void your authority to operate this equipment.

This device complies with part 15 of the FCC Rules. Operation is subject to the following two conditions: (1) This device may not cause harmful interference, and (2) this device must accept any interference received, including interference that may cause undesired operation.

RF Exposure Information

This equipment complies with FCC radiation exposure limits set forth for an uncontrolled environment. This equipment should be installed and operated with minimum distance 20cm between the radiator and your body.

GRACE (NINGBO) SMART TECHNOLOGY CO., LTD

No.3, Building 1, No.818, Qiming Road, Yinzhou District, Ningbo, 315104, China

Tel: +86-574-89251937 E-mail: info@gracesmart.net

www.gracesmart.net