TEST REPORT

Product	:	PETBRICK 65
Trade mark	:	N/A
Model/Type reference	:	DR002
Serial Number	:	N/A
Report Number	:	EED32Q81668002
FCC ID	:	2A3FY-DR002
Date of Issue	:	Dec, 02, 2024
Test Standards	:	47 CFR Part 15 Subpart C
Test result	:	PASS

Prepared for:

Angry Miao Technology Co., Limited
2/F, No.5 of Nanteng Street, Qi'ao Industrial Zone, Tangjiawan Town
Xiangzhou District, Zhuhai China

Prepared by:

Centre Testing International Group Co., Ltd.
Hongwei Industrial Zone, Bao'an 70 District,
Shenzhen, Guangdong, China
TEL: +86-755-3368 3668
FAX: +86-755-3368 3385

Compiled by:	Zhenxia Wen	Reviewed by:	Frazer. Li
	Zhenxia Wen		Frazer Li
Approved by:	Aaron Ma	Date:	Dec, 02, 2024
	Aaron Ma		

Check No.: 4314211024

1 Version

Version No.	Date	Description
00	Dec, 02, 2024	Original

2 Content

1 VERSION 2
2 CONTENT 3
3 TEST SUMMARY 4
4 GENERAL INFORMATION 5
4.1 CLIENT INFORMATION 5
4.2 GENERAL DESCRIPTION OF EUT 5
4.3 TEST CONFIGURATION 6
4.4 TEST ENVIRONMENT 7
4.5 DESCRIPTION OF SUPPORT UNITS 7
4.6 TEST LOCATION 7
4.7 MEASUREMENT UNCERTAINTY (95% CONFIDENCE LEVELS, K=2) 8
5 EQUIPMENT LIST 9
6 TEST RESULTS AND MEASUREMENT DATA 12
6.1 ANTENNA REQUIREMENT 12
6.2 CONDUCTED EMISSIONS 13
6.3 MAXIMUM CONDUCTED OUTPUT POWER 16
6.4 DTS BANDWIDTH 17
6.5 MAXIMUM POWER SPECTRAL DENSITY 18
6.6 BAND EDGE MEASUREMENTS AND CONDUCTED SPURIOUS EMISSION 19
6.7 RADIATED SPURIOUS EMISSION & RESTRICTED BANDS 20
7 APPENDIX 2.4G 31
8 PHOTOGRAPHS OF TEST SETUP 32
9 PHOTOGRAPHS OF EUT CONSTRUCTIONAL DETAILS 34

3 Test Summary

Test Item	Test Requirement	Result
Antenna Requirement	47 CFR Part 15 Subpart C Section 15.203/15.247 (c)	PASS
AC Power Line Conducted Emission	47 CFR Part 15 Subpart C Section 15.207	PASS
DTS Bandwidth	47 CFR Part 15 Subpart C Section 15.247 (a)(2)	PASS
Maximum Conducted Output Power	47 CFR Part 15 Subpart C Section 15.247 (b)(3)	PASS
Maximum Power Spectral Density	47 CFR Part 15 Subpart C Section 15.247 (e)	PASS
Band Edge Measurements	47 CFR Part 15 Subpart C Section 15.247(d)	PASS
Conducted Spurious Emissions	47 CFR Part 15 Subpart C Section 15.247(d)	PASS
Radiated Spurious Emission & Restricted bands	47 CFR Part 15 Subpart C Section 15.205/15.209	PASS
Remark: Company Name and Address shown on Report, the sample(s) and sample Information were provided by the applicant who should be responsible for the authenticity which CTI hasn't verified.		

4 General Information

4.1 Client Information

Applicant:	Angry Miao Technology Co., Limited
Address of Applicant:	2/F, No.5 of Nanteng Street, Qi'ao Industrial Zone, Tangjiawan Town Xiangzhou District, Zhuhai China
Manufacturer:	Angry Miao Technology Co., Limited
Address of Manufacturer:	2/F, No.5 of Nanteng Street, Qi'ao Industrial Zone, Tangjiawan Town Xiangzhou District, Zhuhai China
Factory:	Angry Miao Technology Co., Limited
Address of Factory:	2/F, No.5 of Nanteng Street, Qi'ao Industrial Zone, Tangjiawan Town Xiangzhou District, Zhuhai China

4.2 General Description of EUT

Product Name:	PETBRICK 65	
Model No.:	DR002	
Trade mark:	N/A	
Product Type:	☐ Mobile ☒ Portable ☐ Fixed Location	
Operation Frequency:	2402MHz~2480MHz	
Modulation Type:	GFSK	
Transfer Rate:	2Mbps	
Number of Channel:	23	
Antenna Type:	PIFA Antenna	
Antenna Gain:	0.44dBi	
Power Supply:	USB port:	DC 5V
	Battery:	DC 3.8V
Test Voltage:	DC 3.8V	
Sample Received Date:	Nov. 08, 2024	
Sample tested Date:	Nov. 08, 2024 to Nov. 23, 2024	

Operation Frequency each of channel:

Channel	Frequency	Channel	Frequency	Channel	Frequency
1	2402 MHz	11	2456 MHz	21	2476 MHz
2	2404 MHz	12	2458 MHz	22	2478 MHz
3	2406 MHz	13	2460 MHz	23	2480 MHz
4	2408 MHz	14	2462 MHz		
5	2410 MHz	15	2464 MHz		
6	2436 MHz	16	2466 MHz		
7	2438 MHz	17	2468 MHz		
8	2440 MHz	18	2470 MHz		
9	2442 MHz	19	2472 MHz		
10	2444 MHz	20	2474 MHz		

Note:
In section 15.31(m), regards to the operating frequency range over 10 MHz, the lowest frequency, the middle frequency, and the highest frequency of channel were selected to perform the test, and the selected channel see below:

Channel	Frequency
The lowest channel (CH1)	2402MHz
The middle channel (CH12)	2458MHz
The highest channel (CH23)	2480MHz

4.3 Test Configuration

EUT Test Software Settings:				
Software:	RF Test			
EUT Power Grade:	Default (Power level is built-in set parameters and cannot be changed and selected)			
Use test software to set the lowest frequency, the middle frequency and the highest frequency keep transmitting of the EUT.				
Test Mode	Modulation	Rate	Channel	Frequency(MHz)
Mode a	GFSK	1Mbps	CH1	2402
Mode b	GFSK	1Mbps	CH12	2458
Mode c	GFSK	1Mbps	CH23	2480

4.4 Test Environment

Operating Environment:	
Radiated Spurious Emissions:	
Temperature:	22~25.0 °C
Humidity:	50~55 % RH
Atmospheric Pressure:	1010mbar
Conducted Emissions:	
Temperature:	22~25.0 °C
Humidity:	50~55 % RH
Atmospheric Pressure:	1010mbar
RF Conducted:	
Temperature:	22~25.0 °C
Humidity:	50~55 % RH
Atmospheric Pressure:	1010mbar

4.5 Description of Support Units

The EUT has been tested with associated equipment below.

1） support equipment

Description	Manufacturer	Model No.	Certification	Supplied by
Netbook	HP	HP ZHAN 66 PRO 14 G4	FCC&CE	CTI
Netbook	ASUSTek	/	FCC&CE	CTI

4.6 Test Location

All tests were performed at:

Centre Testing International Group Co., Ltd
Building C, Hongwei Industrial Park Block 70, Bao'an District, Shenzhen, China
Telephone: +86 (0) 755 33683668 Fax:+86 (0) 755 33683385
No tests were sub-contracted.
FCC Designation No.: CN1164

4.7 Measurement Uncertainty (95% confidence levels, k=2)

No.	Item	Measurement Uncertainty
1	Radio Frequency	7.9×10^{-8}
2	RF power, conducted	0.46dB (30MHz-1GHz)
		0.55dB (1GHz-40GHz)
3	Radiated Spurious emission test	3.3dB (9kHz-30MHz)
		4.3dB (30MHz-1GHz)
		4.5dB (1GHz-18GHz)
		3.4dB (18GHz-40GHz)
4	Conduction emission	3.5dB (9kHz to 150kHz)
		3.1dB (150kHz to 30MHz)
5	Temperature test	0.64°C
6	Humidity test	3.8%
7	DC power voltages	0.026%

5 Equipment List

RF test system					
Equipment	**Manufacturer**	**Model No.**	**Serial Number**	**Cal. Date (mm-dd-yyyy)**	**Cal. Due date (mm-dd-yyyy)**
Spectrum Analyzer	Keysight	N9010A	MY54510339	12-14-2023	12-13-2024
Signal Generator	Keysight	N5182B	MY53051549	12-11-2023	12-10-2024
DC Power	Keysight	E3642A	MY56376072	12-11-2023	12-10-2024
Communication test set	R&S	CMW500	169004	03-08-2024	03-07-2025
RF control unit(power unit)	JS Tonscend	JS0806-2	22G8060592	07-22-2024	07-21-2025
Wi-Fi 7GHz Band Extendder	JS Tonscend	TS-WF7U2	2206200002	05-31-2024	05-30-2025
High-low temperature test chamber	Dong Guang Qin Zhuo	LK-80GA	QZ20150611879	12-11-2023	12-10-2024
Temperature/ Humidity Indicator	biaozhi	HM10	1804186	05-29-2024	05-28-2025
BT&WI-FI Automatic test software	JS Tonscend	JS1120-3	V3.3.20	---	---
Spectrum Analyzer	R&S	FSV3044	101509	01-17-2024	01-16-2025

Conducted disturbance Test					
Equipment	**Manufacturer**	**Model No.**	**Serial Number**	**Cal. date (mm-dd-yyyy)**	**Cal. Due date (mm-dd-yyyy)**
Receiver	R&S	ESCI	100435	04-18-2024	04-17-2025
Temperature/ Humidity Indicator	Defu	TH128	/	04-25-2024	04-24-2025
LISN	R&S	ENV216	100098	09-19-2024	09-18-2025
Barometer	changchun	DYM3	1188	---	---
Test software	Fara	EZ-EMC	EMC-CON 3A1.1	---	---

3M Semi-anechoic Chamber (2)- Radiated disturbance Test					
Equipment	**Manufacturer**	**Model No.**	**Serial Number**	**Cal. date (mm-dd-yyyy)**	**Cal. Due date (mm-dd-yyyy)**
3M Chamber & Accessory Equipment	TDK	SAC-3	---	05/22/2022	05/21/2025
Receiver	R&S	ESCI7	100938-003	09/07/2024	09/06/2025
TRILOG Broadband Antenna	schwarzbeck	VULB 9163	9163-618	05/22/2022	05/21/2025
Loop Antenna	Schwarzbeck	FMZB 1519B	1519B-076	04/16/2024	04/15/2025
Multi device Controller	maturo	NCD/070/10711112	---	---	---
Horn Antenna	ETS-LINGREN	BBHA 9120D	9120D-1869	04/16/2024	04/15/2025
Microwave Preamplifier	Agilent	8449B	3008A02425	06/13/2024	06/12/2025
Test software	Fara	EZ-EMC	EMEC-3A1-Pre	---	---

3M full-anechoic Chamber					
Equipment	**Manufacturer**	**Model No.**	**Serial Number**	**Cal. Date (mm-dd-yyyy)**	**Cal. Due date (mm-dd-yyyy)**
Fully Anechoic Chamber	TDK	FAC-3	---	01-09-2024	01-08-2027
Receiver	Keysight	N9038A	MY57290136	01-09-2024	01-08-2025
Spectrum Analyzer	Keysight	N9020B	MY57111112	01-29-2024	01-28-2025
Spectrum Analyzer	Keysight	N9030B	MY57140871	01-23-2024	01-22-2025
TRILOG Broadband Antenna	Schwarzbeck	VULB 9163	9163-1148	04-28-2024	04-27-2025
Horn Antenna	Schwarzbeck	BBHA 9170	9170-832	04-16-2024	04-15-2025
Horn Antenna	ETS-LINDGREN	3117	57407	07-03-2024	07-02-2025
Preamplifier	EMCI	EMC001330	980563	03-08-2024	03-07-2025
Preamplifier	Tonscend	TAP-011858	AP21B806112	07-18-2024	07-17-2025
Preamplifier	Tonscend	EMC051845SE	980380	12-14-2023	12-13-2024
Communication test set	R&S	CMW500	102898	12-14-2023	12-13-2024
Temperature/ Humidity Indicator	biaozhi	GM1360	EE1186631	04-07-2024	04-06-2025
RSE Automatic test software	JS Tonscend	JS36-RSE	V4.0.0.0	---	---
Cable line	Times	SFT205-NMSM-2.50M	394812-0001		---
Cable line	Times	SFT205-NMSM-2.50M	394812-0002	---	---
Cable line	Times	SFT205-NMSM-2.50M	394812-0003	---	---
Cable line	Times	SFT205-NMSM-2.50M	393495-0001	---	---
Cable line	Times	EMC104-NMNM-1000	SN160710	---	---
Cable line	Times	SFT205-NMSM-3.00M	394813-0001	---	---
Cable line	Times	SFT205-NMNM-1.50M	381964-0001	---	---
Cable line	Times	SFT205-NMSM-7.00M	394815-0001	---	---
Cable line	Times	HF160-KMKM-3.00M	393493-0001	---	---

6 Test results and Measurement Data

6.1 Antenna Requirement

Standard requirement:	47 CFR Part 15C Section 15.203 /247(c)
15.203 requirement: An intentional radiator shall be designed to ensure that no antenna other than that furnished by the responsible party shall be used with the device. The use of a permanently attached antenna or of an antenna that uses a unique coupling to the intentional radiator, the manufacturer may design the unit so that a broken antenna can be replaced by the user, but the use of a standard antenna jack or electrical connector is prohibited. 15.247(b) (4) requirement: The conducted output power limit specified in paragraph (b) of this section is based on the use of antennas with directional gains that do not exceed 6 dBi. Except as shown in paragraph (c) of this section, if transmitting antennas of directional gain greater than 6 dBi are used, the conducted output power from the intentional radiator shall be reduced below the stated values in paragraphs (b)(1), (b)(2), and (b)(3) of this section, as appropriate, by the amount in dB that the directional gain of the antenna exceeds 6 dBi.	
EUT Antenna:	Please see Internal photos
The antenna is PIFA antenna. The best case gain of the antenna is 0.44dBi.	

6.2 Conducted Emissions

Test Requirement:	47 CFR Part 15C Section 15.207
Test Method:	ANSI C63.10: 2013
Test Frequency Range:	150kHz to 30MHz
Receiver setup:	RBW=9 kHz, VBW=30 kHz, Sweep time=auto
Limit:	

Frequency range (MHz)	Limit (dBuV)	
	Quasi-peak	Average
0.15-0.5	66 to 56*	56 to 46*
0.5-5	56	46
5-30	60	50

* Decreases with the logarithm of the frequency.

Test Setup:

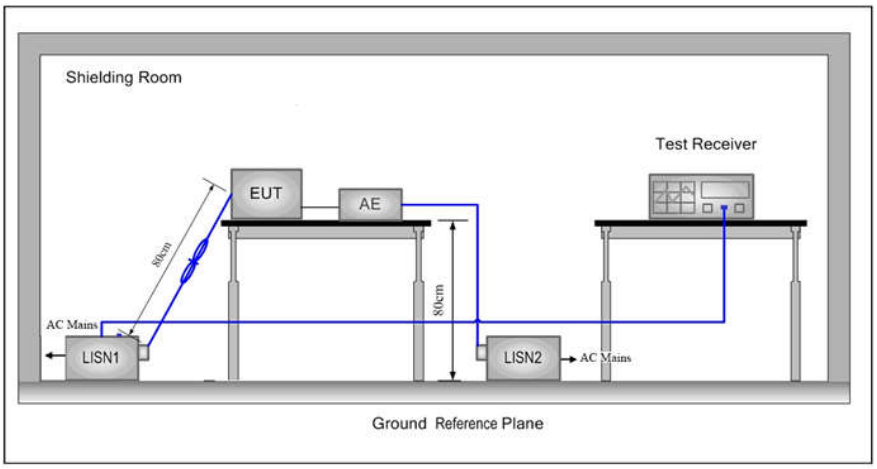

Test Procedure:

1) The mains terminal disturbance voltage test was conducted in a shielded room.
2) The EUT was connected to AC power source through a LISN 1 (Line Impedance Stabilization Network) which provides a 50Ω/50μH + 5Ω linear impedance. The power cables of all other units of the EUT were connected to a second LISN 2, which was bonded to the ground reference plane in the same way as the LISN 1 for the unit being measured. A multiple socket outlet strip was used to connect multiple power cables to a single LISN provided the rating of the LISN was not exceeded.
3) The tabletop EUT was placed upon a non-metallic table 0.8m above the ground reference plane. And for floor-standing arrangement, the EUT was placed on the horizontal ground reference plane.
4) The test was performed with a vertical ground reference plane. The rear of the EUT shall be 0.4 m from the vertical ground reference plane. The vertical ground reference plane was bonded to the horizontal ground reference plane. The LISN 1 was placed 0.8 m from the boundary of the unit under test and bonded to a ground reference plane for LISNs mounted on top of the ground reference plane. This distance was between the closest points of the LISN 1 and the EUT. All other units of the EUT and associated equipment was at least 0.8 m from the LISN 2.
5) In order to find the maximum emission, the relative positions of equipment and all of the interface cables must be changed according to ANSI C63.10: 2013 on conducted measurement.

Test Mode: All modes were tested, only the worst case mode a was recorded in the report.

Test Results:	Pass

Measurement Data

Live line:

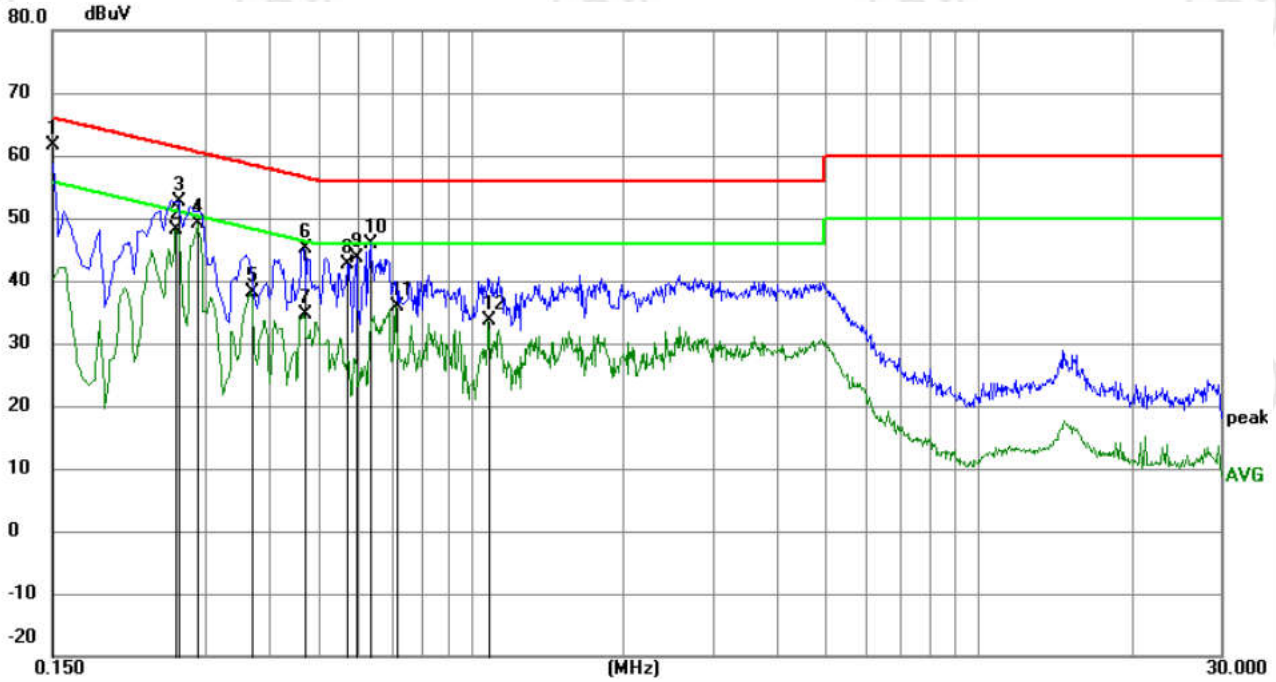

No.	Mk.	Freq.	Reading Level	Correct Factor	Measure-ment	Limit	Margin		
		MHz	dBuV	dB	dBuV	dBuV	dB	Detector	Comment
1		0.1500	51.76	9.84	61.60	66.00	-4.40	QP	
2		0.2625	38.51	9.66	48.17	51.35	-3.18	AVG	
3		0.2670	42.97	9.65	52.62	61.21	-8.59	QP	
4	*	0.2895	39.49	9.57	49.06	50.54	-1.48	AVG	
5		0.3704	28.51	9.72	38.23	48.49	-10.26	AVG	
6		0.4695	35.30	9.78	45.08	56.52	-11.44	QP	
7		0.4695	24.90	9.78	34.68	46.52	-11.84	AVG	
8		0.5730	33.09	9.64	42.73	56.00	-13.27	QP	
9		0.5955	34.01	9.60	43.61	56.00	-12.39	QP	
10		0.6360	36.18	9.74	45.92	56.00	-10.08	QP	
11		0.7125	25.87	9.97	35.84	46.00	-10.16	AVG	
12		1.0859	23.89	9.74	33.63	46.00	-12.37	AVG	

Remark:

1. The following Quasi-Peak and Average measurements were performed on the EUT:
2. Final Test Level =Receiver Reading + LISN Factor + Cable Loss.
3. If the Peak value under Average limit, the Average value is not recorded in the report.

Neutral line:

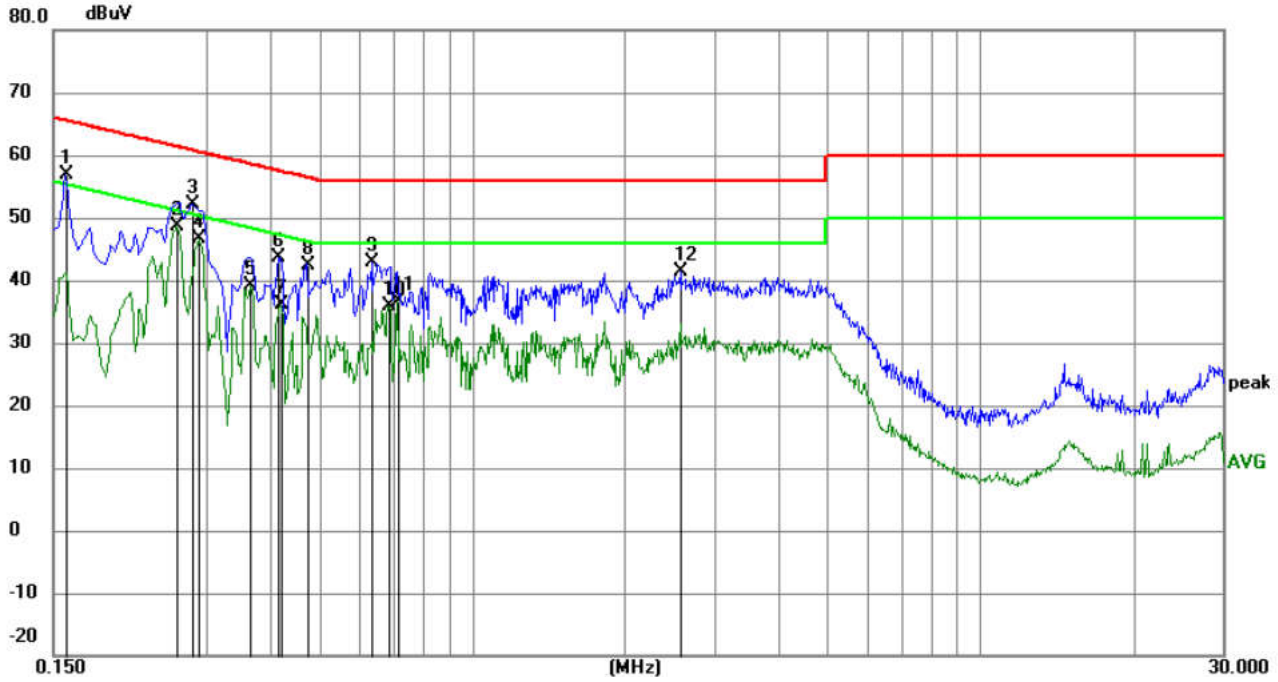

No.	Mk.	Freq.	Reading Level	Correct Factor	Measure-ment	Limit	Margin		
		MHz	dBuV	dB	dBuV	dBuV	dB	Detector	Comment
1		0.1590	47.02	9.85	56.87	65.52	-8.65	QP	
2	*	0.2625	39.03	9.66	48.69	51.35	-2.66	AVG	
3		0.2805	42.49	9.60	52.09	60.80	-8.71	QP	
4		0.2895	37.05	9.57	46.62	50.54	-3.92	AVG	
5		0.3660	29.31	9.70	39.01	48.59	-9.58	AVG	
6		0.4155	33.92	9.79	43.71	57.54	-13.83	QP	
7		0.4200	26.30	9.79	36.09	47.45	-11.36	AVG	
8		0.4740	32.72	9.78	42.50	56.44	-13.94	QP	
9		0.6360	33.25	9.74	42.99	56.00	-13.01	QP	
10		0.6855	25.93	9.94	35.87	46.00	-10.13	AVG	
11		0.7125	26.68	9.97	36.65	46.00	-9.35	AVG	
12		2.5800	31.53	9.77	41.30	56.00	-14.70	QP	

Remark:

1. The following Quasi-Peak and Average measurements were performed on the EUT:
2. Final Test Level =Receiver Reading + LISN Factor + Cable Loss.
3. If the Peak value under Average limit, the Average value is not recorded in the report.

6.3 Maximum Conducted Output Power

Test Requirement:	47 CFR Part 15C Section 15.247 (b)(3)
Test Method:	ANSI C63.10 2013
Test Setup:	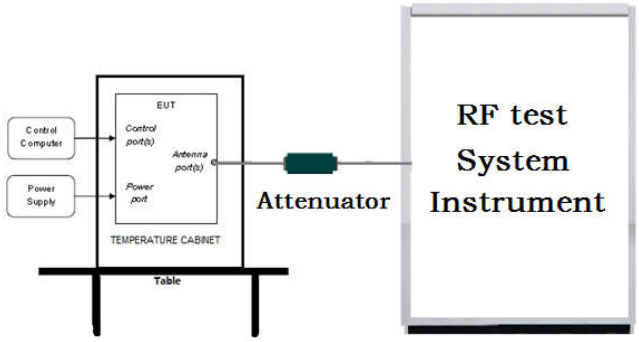 Remark: Offset=Cable loss+ attenuation factor.
Test Procedure:	a) Set the RBW ⩾ DTS bandwidth. b) Set VBW ⩾ 3 × RBW. c) Set span ⩾ 3 x RBW d) Sweep time = auto couple. e) Detector = peak. f) Trace mode = max hold. g) Allow trace to fully stabilize. h) Use peak marker function to determine the peak amplitude level.
Limit:	30dBm
Test Mode:	Refer to clause 5.3
Test Results:	Refer to Appendix 2.4G

6.4 DTS Bandwidth

Test Requirement:	47 CFR Part 15C Section 15.247 (a)(2)
Test Method:	ANSI C63.10 2013
Test Setup:	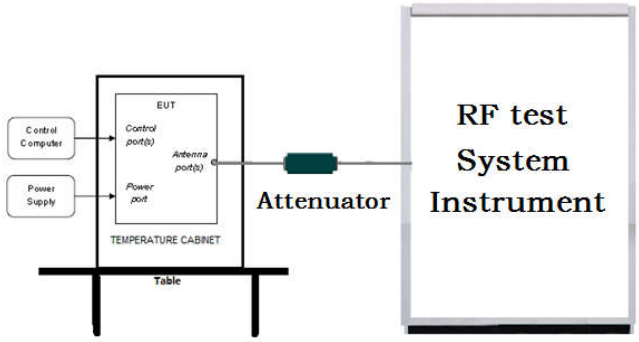 Remark: Offset=Cable loss+ attenuation factor.
Test Procedure:	a) Set RBW = 100 kHz. b) Set the VBW ⩾[3 × RBW]. c) Detector = peak. d) Trace mode = max hold. e) Sweep = auto couple. f) Allow the trace to stabilize. g) Measure the maximum width of the emission that is constrained by the frequencies associated with the two outermost amplitude points (upper and lower frequencies) that are attenuated by 6 dB relative to the maximum level measured in the fundamental emission.
Limit:	≥ 500 kHz
Test Mode:	Refer to clause 5.3
Test Results:	Refer to Appendix 2.4G

6.5 Maximum Power Spectral Density

Test Requirement:	47 CFR Part 15C Section 15.247 (e)
Test Method:	ANSI C63.10 2013
Test Setup:	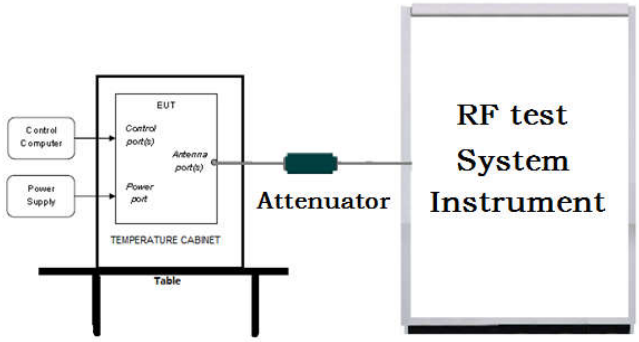 Remark: Offset=Cable loss+ attenuation factor.
Test Procedure:	a) Set analyzer center frequency to DTS channel center frequency. b) Set the span to 1.5 times the DTS bandwidth. c) Set the RBW to 3 kHz ＜ RBW ＜ 100 kHz. d) Set the VBW ＞ [3 × RBW]. e) Detector = peak. f) Sweep time = auto couple. g) Trace mode = max hold. h) Allow trace to fully stabilize. i) Use the peak marker function to determine the maximum amplitude level within the RBW. j) If measured value exceeds requirement, then reduce RBW (but no less than 3 kHz) and repeat.
Limit:	≤8.00dBm/3kHz
Test Mode:	Refer to clause 5.3
Test Results:	Refer to Appendix 2.4G

6.6 Band Edge measurements and Conducted Spurious Emission

Test Requirement:	47 CFR Part 15C Section 15.247 (d)
Test Method:	ANSI C63.10 2013
Test Setup:	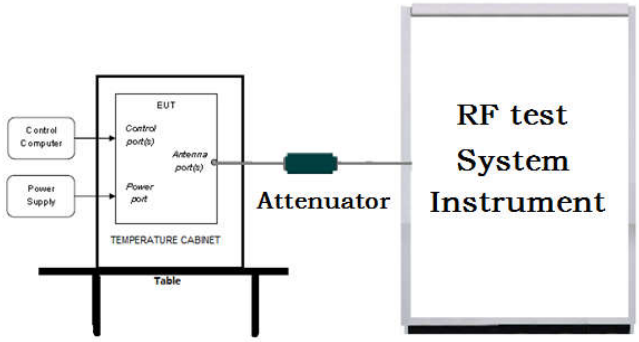 Remark: Offset=Cable loss+ attenuation factor.
Test Procedure:	a) Set RBW =100KHz. b) Set VBW = 300KHz. c) Sweep time = auto couple. d) Detector = peak. e) Trace mode = max hold. f) Allow trace to fully stabilize. g) Use peak marker function to determine the peak amplitude level.
Limit:	In any 100 kHz bandwidth outside the frequency band in which the spread spectrum intentional radiator is operating, the radio frequency power that is produced by the intentional radiator shall be at least 20 dB below that in the 100 kHz bandwidth within the band that contains the highest level of the desired power, based on either an RF conducted or a radiated measurement.
Test Mode:	Refer to clause 5.3
Test Results:	Refer to Appendix 2.4G

6.7 Radiated Spurious Emission & Restricted bands

Test Requirement:	47 CFR Part 15C Section 15.209 and 15.205
Test Method:	ANSI C63.10 2013
Test Site:	Measurement Distance: 3m (Semi-Anechoic Chamber)
Receiver Setup:	

Frequency	Detector	RBW	VBW	Remark
0.009MHz-0.090MHz	Peak	10kHz	30kHz	Peak
0.009MHz-0.090MHz	Average	10kHz	30kHz	Average
0.090MHz-0.110MHz	Quasi-peak	10kHz	30kHz	Quasi-peak
0.110MHz-0.490MHz	Peak	10kHz	30kHz	Peak
0.110MHz-0.490MHz	Average	10kHz	30kHz	Average
0.490MHz -30MHz	Quasi-peak	10kHz	30kHz	Quasi-peak
30MHz-1GHz	Quasi-peak	100 kHz	300kHz	Quasi-peak
Above 1GHz	Peak	1MHz	3MHz	Peak
	Peak	1MHz	10kHz	Average

Limit:

Frequency	Field strength (microvolt/meter)	Limit (dBuV/m)	Remark	Measurement distance (m)
0.009MHz-0.490MHz	2400/F(kHz)	-	-	300
0.490MHz-1.705MHz	24000/F(kHz)	-	-	30
1.705MHz-30MHz	30	-	-	30
30MHz-88MHz	100	40.0	Quasi-peak	3
88MHz-216MHz	150	43.5	Quasi-peak	3
216MHz-960MHz	200	46.0	Quasi-peak	3
960MHz-1GHz	500	54.0	Quasi-peak	3
Above 1GHz	500	54.0	Average	3

Note: 15.35(b), Unless otherwise specified, the limit on peak radio frequency emissions is 20dB above the maximum permitted average emission limit applicable to the equipment under test. This peak limit applies to the total peak emission level radiated by the device.

Test Setup:	

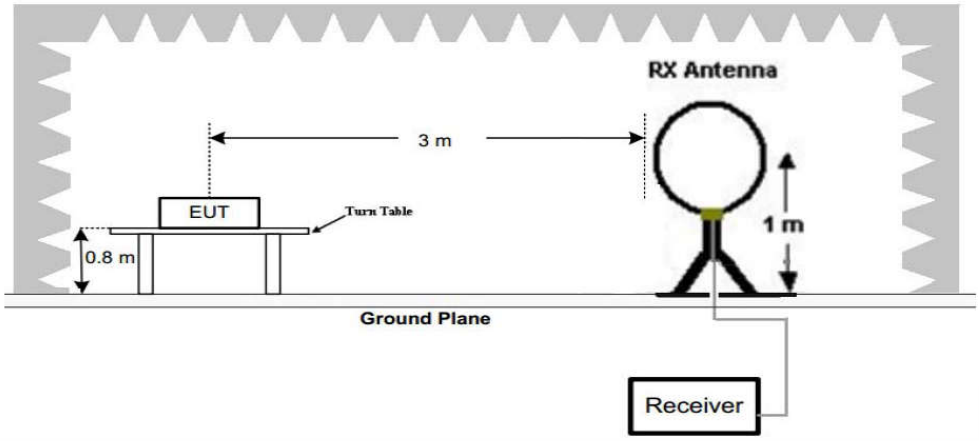

Figure 1. Below 30MHz

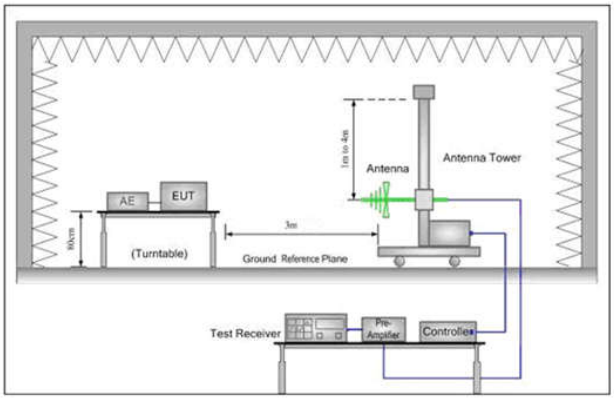

Figure 2. 30MHz to 1GHz

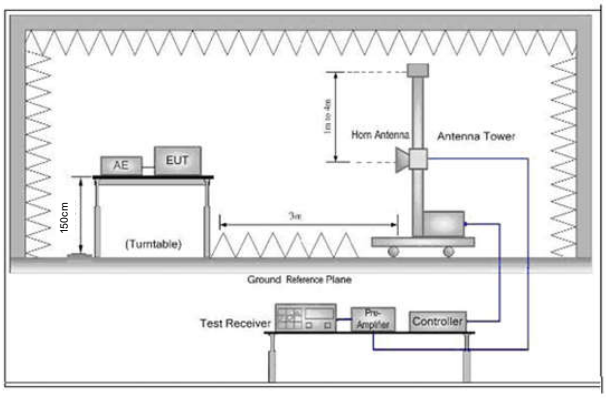

Figure 3. Above 1 GHz

Test Procedure:	a. 1) Below 1G: The EUT was placed on the top of a rotating table 0.8 meters above the ground at a 3 meter semi-anechoic camber. The table was rotated 360 degrees to determine the position of the highest radiation. 2) Above 1G: The EUT was placed on the top of a rotating table 1.5 meters above the ground at a 3 meter semi-anechoic camber. The table was rotated 360 degrees to determine the position of the highest radiation. Note: For the radiated emission test above 1GHz: Place the measurement antenna away from each area of the EUT determined to be a source of emissions at the specified measurement distance, while keeping the measurement antenna aimed at the source of emissions at each frequency of significant emissions, with polarization oriented for maximum response. The measurement antenna may have to be higher or lower than the EUT, depending on the radiation pattern of the emission and staying aimed at the emission source for receiving the maximum signal. The final measurement antenna elevation shall be that which maximizes the emissions. The measurement antenna elevation for maximum emissions shall be restricted to a range of heights of from 1 m to 4 m above the ground or reference ground plane. b. The EUT was set 3 meters away from the interference-receiving antenna, which was mounted on the top of a variable-height antenna tower. c. The antenna height is varied from one meter to four meters above the ground to determine the maximum value of the field strength. Both

	horizontal and vertical polarizations of the antenna are set to make the measurement. d. For each suspected emission, the EUT was arranged to its worst case and then the antenna was tuned to heights from 1 meter to 4 meters (for the test frequency of below 30MHz, the antenna was tuned to heights 1 meter) and the rotatable table was turned from 0 degrees to 360 degrees to find the maximum reading. e. The test-receiver system was set to Peak Detect Function and Specified Bandwidth with Maximum Hold Mode. f. If the emission level of the EUT in peak mode was 10dB lower than the limit specified, then testing could be stopped and the peak values of the EUT would be reported. Otherwise the emissions that did not have 10dB margin would be re-tested one by one using peak, quasi-peak or average method as specified and then reported in a data sheet. g. Test the EUT in the lowest channel (2402MHz),the middle channel (2440MHz),the Highest channel (2480MHz) h. The radiation measurements are performed in X, Y, Z axis positioning for Transmitting mode, and found the X axis positioning which it is the worst case. i. Repeat above procedures until all frequencies measured was complete.
Test Mode:	Refer to clause 5.3
Test Results:	Pass

Radiated Spurious Emission below 1GHz:

During the test, the Radiates Emission from 30MHz to 1GHz was performed in all modes, only the worst case highest channel of GFSK 1M was recorded in the report.

Horizontal:

Test Graph

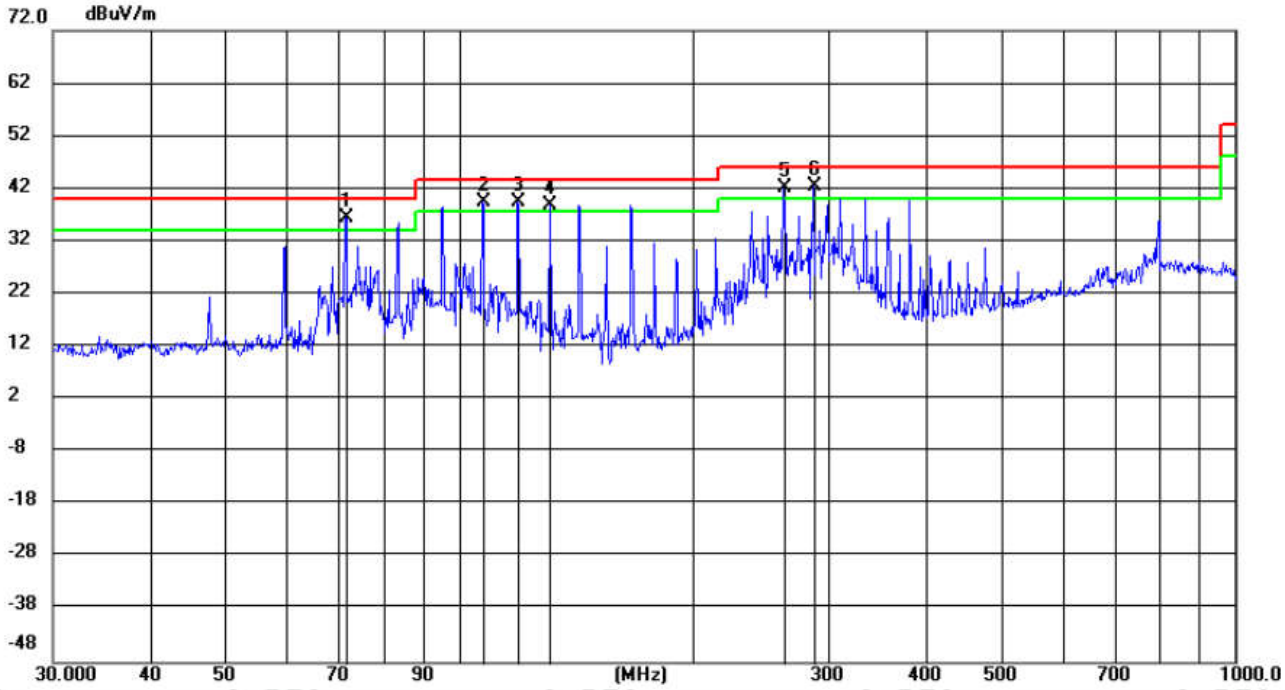

No.	Mk.	Freq.	Reading Level	Correct Factor	Measure-ment	Limit	Margin		Antenna Height	Table Degree	
		MHz	dBuV	dB/m	dBuV/m	dBuV/m	dB	Detector	cm	degree	Comment
1	*	71.5680	26.27	10.25	36.52	40.00	-3.48	QP	100	7	
2	!	107.3781	26.51	12.99	39.50	43.50	-4.00	QP	100	355	
3	!	119.3104	27.72	11.75	39.47	43.50	-4.03	QP	100	7	
4	!	131.2734	28.96	9.80	38.76	43.50	-4.74	QP	100	7	
5	!	262.6651	27.46	14.74	42.20	46.00	-3.80	QP	100	7	
6	!	286.7308	26.85	15.65	42.50	46.00	-3.50	QP	100	344	

Vertical:

Test Graph

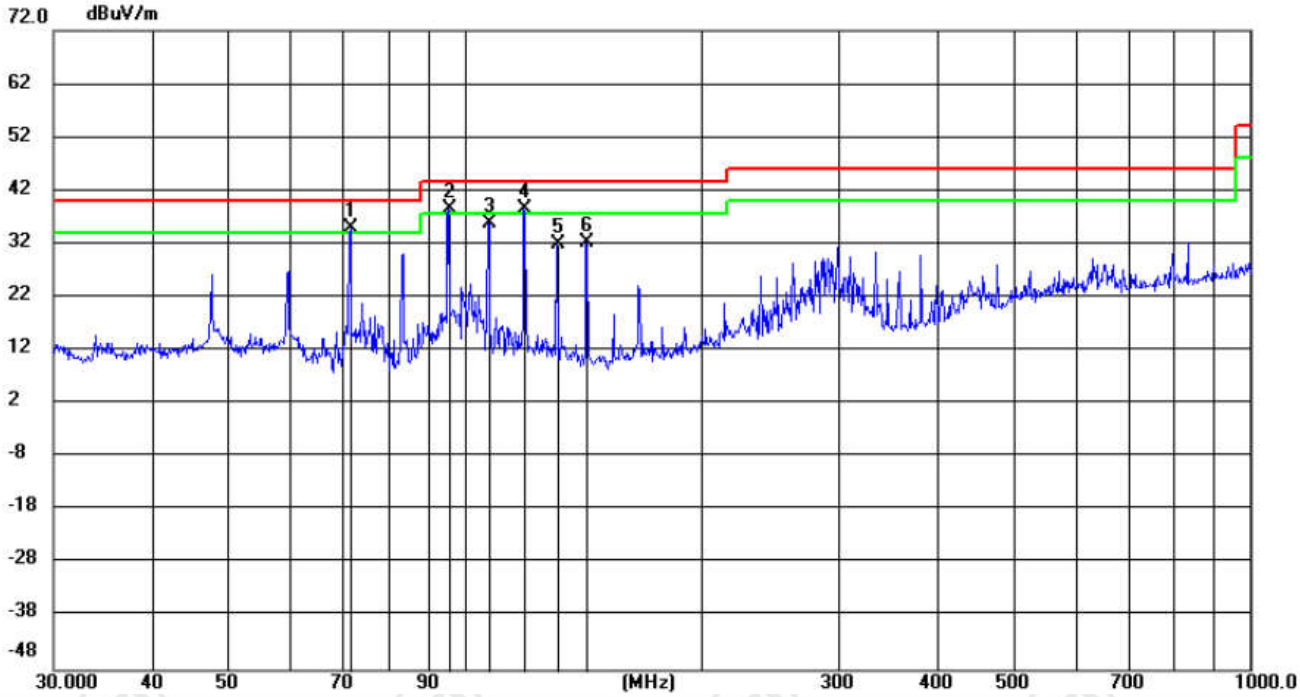

No.	Mk.	Freq.	Reading Level	Correct Factor	Measure-ment	Limit	Margin		Antenna Height	Table Degree	
		MHz	dBuV	dB/m	dBuV/m	dBuV/m	dB	Detector	cm	degree	Comment
1	!	71.6308	24.70	10.24	34.94	40.00	-5.06	QP	100	217	
2	!	95.5274	25.98	12.50	38.48	43.50	-5.02	QP	100	60	
3		107.4159	22.87	12.98	35.85	43.50	-7.65	QP	100	102	
4	*	119.3733	26.92	11.74	38.66	43.50	-4.84	QP	100	112	
5		131.3656	22.21	9.80	32.01	43.50	-11.49	QP	100	91	
6		143.2005	23.17	9.15	32.32	43.50	-11.18	QP	100	91	

Radiated Spurious Emission above 1GHz:

Mode:		2.4G Transmitting				Channel:		2402 MHz	
NO	Freq. [MHz]	Factor [dB]	Reading [dBμV]	Level [dBμV/m]	Limit [dBμV/m]	Margin [dB]	Result	Polarity	Remark
1	1150.215	10.40	37.25	47.65	74.00	26.35	Pass	H	PK
2	1949.4949	17.07	35.30	52.37	74.00	21.63	Pass	H	PK
3	3991.0661	-12.47	55.35	42.88	74.00	31.12	Pass	H	PK
4	6000.2	-7.56	50.40	42.84	74.00	31.16	Pass	H	PK
5	7206.2804	-5.17	51.53	46.36	74.00	27.64	Pass	H	PK
6	15896.8598	13.59	38.30	51.89	74.00	22.11	Pass	H	PK
7	1147.6148	10.33	37.61	47.94	74.00	26.06	Pass	V	PK
8	1936.6937	16.65	34.91	51.56	74.00	22.44	Pass	V	PK
9	3982.0655	-12.23	57.37	45.14	74.00	28.86	Pass	V	PK
10	4503.1002	-8.52	50.87	42.35	74.00	31.65	Pass	V	PK
11	7205.2804	-5.19	49.75	44.56	74.00	29.44	Pass	V	PK
12	16436.8958	12.41	39.78	52.19	74.00	21.81	Pass	V	PK

Mode:		2.4GTransmitting				Channel:		2458 MHz	
NO	Freq. [MHz]	Factor [dB]	Reading [dBμV]	Level [dBμV/m]	Limit [dBμV/m]	Margin [dB]	Result	Polarity	Remark
1	1145.8146	10.28	36.99	47.27	74.00	26.73	Pass	H	PK
2	1926.2926	16.31	35.69	52.00	74.00	22.00	Pass	H	PK
3	3992.0661	-12.49	55.35	42.86	74.00	31.14	Pass	H	PK
4	6000.2	-7.56	50.10	42.54	74.00	31.46	Pass	H	PK
5	7344.2896	-4.29	50.26	45.97	74.00	28.03	Pass	H	PK
6	15893.8596	13.48	38.49	51.97	74.00	22.03	Pass	H	PK
7	1145.0145	10.25	37.41	47.66	74.00	26.34	Pass	V	PK
8	1928.0928	16.38	35.51	51.89	74.00	22.11	Pass	V	PK
9	3319.0213	-13.04	53.93	40.89	74.00	33.11	Pass	V	PK
10	4483.0989	-10.03	50.27	40.24	74.00	33.76	Pass	V	PK
11	7344.2896	-4.29	49.99	45.70	74.00	28.30	Pass	V	PK
12	14472.7649	10.21	41.11	51.32	74.00	22.68	Pass	V	PK

Mode:			2.4G Transmitting			Channel:		2480 MHz	
NO	Freq. [MHz]	Factor [dB]	Reading [dBμV]	Level [dBμV/m]	Limit [dBμV/m]	Margin [dB]	Result	Polarity	Remark
1	1150.015	10.41	37.23	47.64	74.00	26.36	Pass	H	PK
2	1927.6928	16.36	35.72	52.08	74.00	21.92	Pass	H	PK
3	3981.0654	-12.22	55.62	43.40	74.00	30.60	Pass	H	PK
4	7439.296	-4.55	51.37	46.82	74.00	27.18	Pass	H	PK
5	10304.487	3.81	45.07	48.88	74.00	25.12	Pass	H	PK
6	15905.8604	13.26	39.02	52.28	74.00	21.72	Pass	H	PK
7	1150.015	10.41	37.55	47.96	74.00	26.04	Pass	V	PK
8	1964.6965	16.24	35.89	52.13	74.00	21.87	Pass	V	PK
9	3982.0655	-12.23	53.89	41.66	74.00	32.34	Pass	V	PK
10	7439.296	-4.55	52.32	47.77	74.00	26.23	Pass	V	PK
11	11257.5505	5.41	44.44	49.85	74.00	24.15	Pass	V	PK
12	15900.8601	13.64	38.72	52.36	74.00	21.64	Pass	V	PK

Remark:

1) The field strength is calculated by adding the Antenna Factor, Cable Factor & Preamplifier. The basic equation with a sample calculation is as follows:
   Final Test Level =Receiver Reading + Antenna Factor + Cable Factor – Preamplifier Factor
2) Scan from 9kHz to 25GHz, the disturbance above 10GHz and below 30MHz was very low. As shown in this section, for frequencies above 1GHz, the field strength limits are based on average limits. However, the peak field strength of any emission shall not exceed the maximum permitted average limits specified above by more than 20 dB under any condition of modulation. So, only the peak measurements were shown in the report.

Restricted bands:

Test plot as follows:

EUT_Name		Test_Model	
Test_Mode	2.4G Transmitting	Test_Frequency	2402MHz
Tset_Engineer	chenjun	Test_Date	2024/11/18
Remark	21.8°C59.9%\		

Test Graph

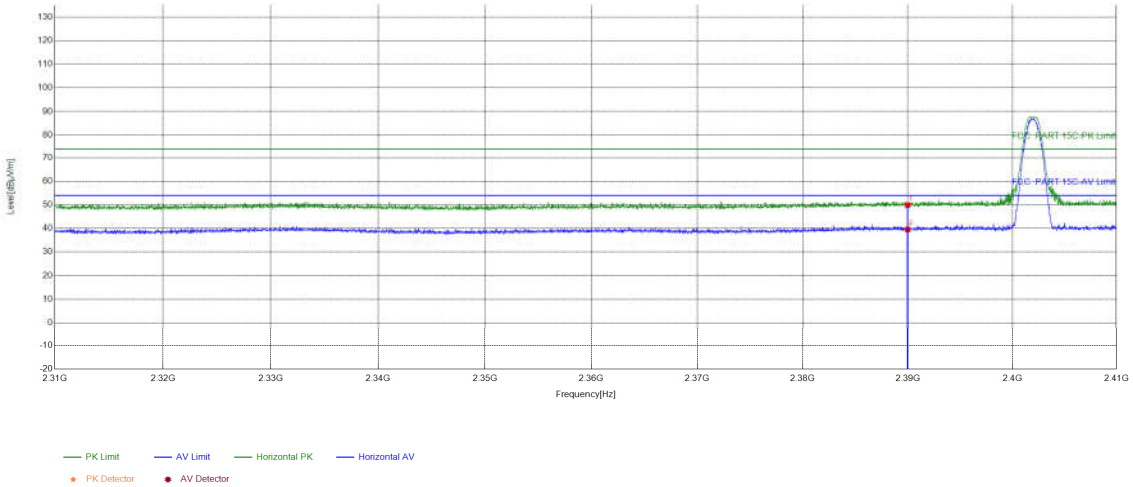

Suspected List									
NO	Freq. [MHz]	Factor [dB]	Reading [dBμV]	Level [dBμV/m]	Limit [dBμV/m]	Margin [dB]	Result	Polarity	Remark
1	2390	15.31	34.58	49.89	74.00	24.11	PASS	Horizontal	PK
2	2390	15.31	24.25	39.56	54.00	14.44	PASS	Horizontal	AV

EUT_Name		Test_Model	
Test_Mode	2.4G Transmitting	Test_Frequency	2402MHz
Tset_Engineer	chenjun	Test_Date	2024/11/18
Remark	21.8°C59.9%\		

Test Graph

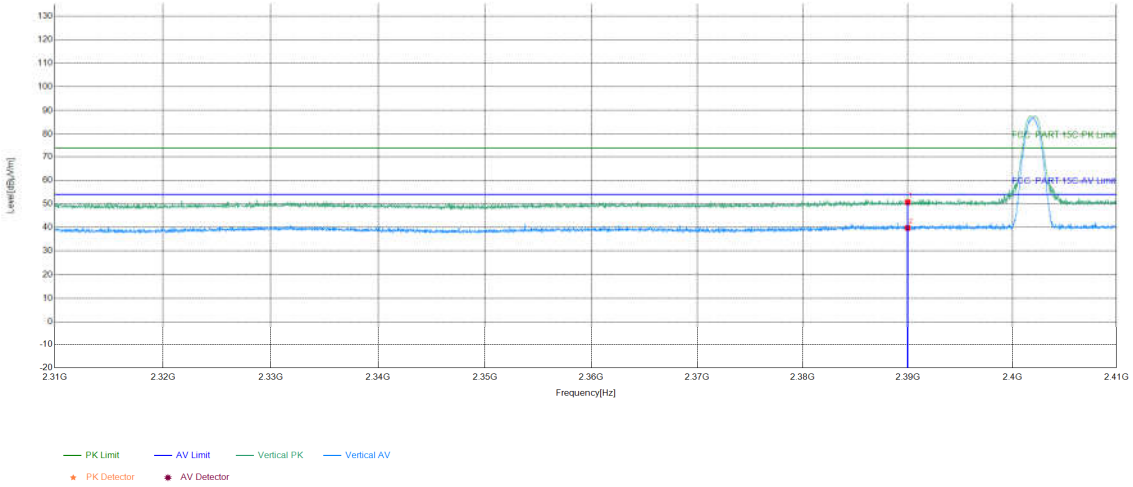

Suspected List									
NO	Freq. [MHz]	Factor [dB]	Reading [dBμV]	Level [dBμV/m]	Limit [dBμV/m]	Margin [dB]	Result	Polarity	Remark
1	2390	15.31	35.39	50.70	74.00	23.30	PASS	Vertical	PK
2	2390	15.31	24.47	39.78	54.00	14.22	PASS	Vertical	AV

EUT_Name		Test_Model	
Test_Mode	2.4G Transmitting	Test_Frequency	2480MHz
Tset_Engineer	chenjun	Test_Date	2024/11/18
Remark	21.8°C59.9%\		

Test Graph

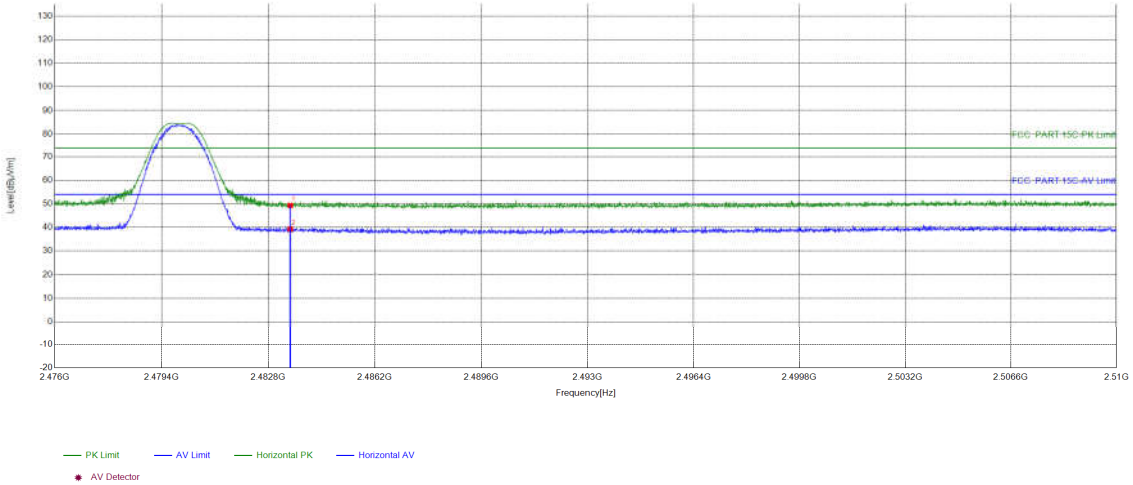

Suspected List									
NO	Freq. [MHz]	Factor [dB]	Reading [dBμV]	Level [dBμV/m]	Limit [dBμV/m]	Margin [dB]	Result	Polarity	Remark
1	2483.5	15.16	34.18	49.34	74.00	24.66	PASS	Horizontal	PK
2	2483.5	15.16	24.12	39.28	54.00	14.72	PASS	Horizontal	AV

EUT_Name		Test_Model	
Test_Mode	2.4G Transmitting	Test_Frequency	2480MHz
Tset_Engineer	chenjun	Test_Date	2024/11/18
Remark	21.8°C59.9%\		

Test Graph

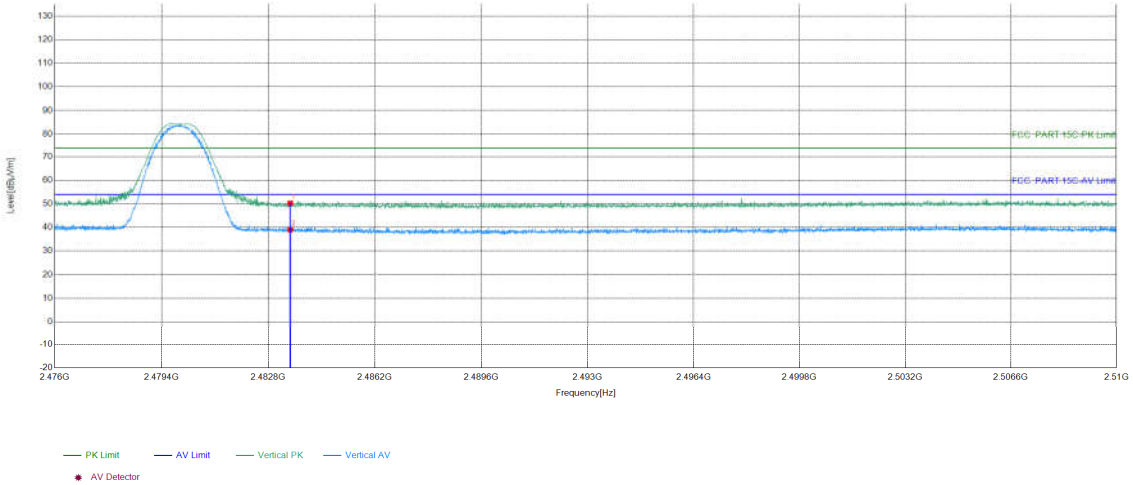

Suspected List									
NO	Freq. [MHz]	Factor [dB]	Reading [dBμV]	Level [dBμV/m]	Limit [dBμV/m]	Margin [dB]	Result	Polarity	Remark
1	2483.5	15.16	35.11	50.27	74.00	23.73	PASS	Vertical	PK
2	2483.5	15.16	23.90	39.06	54.00	14.94	PASS	Vertical	AV

Note:
The field strength is calculated by adding the Antenna Factor, Cable Factor & Preamplifier. The basic equation with a sample calculation is as follows:
Final Test Level =Receiver Reading -Correct Factor
Correct Factor = Preamplifier Factor– Antenna Factor–Cable Factor

7 Appendix 2.4G

Refer to Appendix: 2.4G of EED32Q81668002

9 PHOTOGRAPHS OF EUT Constructional Details

Refer to Report No.EED32Q81668001 for EUT external and internal photos.

The test report is effective only with both signature and specialized stamp, The result(s) shown in this report refer only to the sample(s) tested. Without written approval of CTI, this report can't be reproduced except in full.

*** End of Report ***