eitan medical sapphire™

Sapphire™

User Manual

Multi-Therapy & Epidural Infusion Pumps

REF 15025-048-1030 | Rev156.1000Ver030 / 098.2021

For use with
Sapphire Infusion Pump Software r16.00

Important Notice

The Sapphire Infusion Pump User Manual is delivered subject to the conditions and restrictions listed in this section. Clinicians, qualified hospital staff, and home users should read the entire User Manual prior to operating the Sapphire pump in order to fully understand the functionality and operating procedures of the pump and its accessories.

- Healthcare professionals should not disclose to the patient the pump's security codes, Lock levels, or any other information that may allow the patient access to all programming and operating functions.
- Improper programming may cause injury to the patient.
- Home users of the Sapphire pump should be instructed by a certified home healthcare provider or clinician on the proper use of this pump.

Prescription Notice

Federal United States law restricts this device for sale by or on the order of a physician only {21 CFR 801.109(b) (1)}.
The Sapphire pump is for use at the direction of, or under the supervision of, licensed physicians and/or licensed healthcare professionals who are trained in the use of the pump and in the administration of blood, medication and parenteral nutrition. The instructions for use presented in this manual should in no way supersede established medical protocol concerning patient care.

Copyright, Trademark and Patent Information

© 202~~1~~2, Eitan Medical Ltd. All right reserved.
Sapphire and Eitan Medical are trademarks of Eitan Medical Ltd.
The design, pumping mechanism and other features of the Sapphire pump are protected under one or more US and Foreign Patents.

Disclaimer

The information in this manual has been carefully examined and is believed to be reliable. No responsibility is assumed for any inadvertent inaccuracies. Eitan Medical Ltd. reserves the right to make changes to any of its products in order to improve reliability, design and performance. The instructions presented in this manual should in no way supersede established medical protocol concerning patient care. The text and drawings herein are for the purposes of illustration and reference only; the specifications on which they are based are subject to change without notice.

Warning

Use only Eitan Medical Ltd. supplied administration sets and accessories with the Sapphire pump. Use of administration sets other than Eitan Medical Ltd. supplied sets may impair the operation of the pump and the accuracy and flow rate of the infusion, and may generate hazardous fluid pressures which may activate occlusion alarms at unpredictable pressures.

Alternatively, administration sets from different manufacturers that are regulatory cleared and labeled for use with the Sapphire infusion system, can be used as well. The list of regulatory cleared sets needs to be obtained from the official manufacturer's publication such as manufacturer's website, catalog or any other formally published document.

Using anything other than administration sets regulatory cleared and labeled for use with Sapphire infusion system, may result in operation that is not within the constraints and parameters of the device.

Eitan Medical Ltd. warranty on this device will be null and void and Eitan Medical Ltd. will assume no responsibility for incidents which may occur if the product is not used in accordance with product labeling. Refer to Warnings and Safety Precautions on page 25 for a complete list of warnings and cautions.

Technical Assistance

For technical questions, troubleshooting assistance and reporting of unexpected events, please contact your local agent/distributor, and refer to Technical Support Contacts on page 320. You may also contact Eitan Medical Ltd. support via email to the following address: support@eitanmedical.com

Serious Incident Reporting

Any serious incident that has occurred in relation to the device should be reported to complaints@eitanmedical.com and the local competent authority.

Contents

1. Introduction 10

Product Overview and Indications 10
- Clinical Benefits 11
- Contraindications 11
- Dedicated Delivery Mode Configurations 11
- Features 12

Terms and Abbreviations 14
Document Conventions 16
Safety and Compliance Information 16
- Symbols and Labeling 17
- Compliance and Classification 23
- Biocompatibility 24
- Sterilization 24
- Degree of Protection Against Ingress of Water and Dust 24

Warnings and Safety Precautions 25
- General Warnings and Precautions 25
- Proper Use of the Pump 30

2. Components, Accessories, and Administration Sets36

Unpacking the Pump 36
Hardware and Software Components 37
- Touch Screen 38

Using Pump Accessories 40
- Mini Cradle 40
- PCA Lockboxes 44
- PCA Lockbox 250mL 48
- PCA/PCEA/PIEB Bolus Handle 53
- Sapphire Connect (Version 1.0) 54

Power Supply....75
Integrated Power Supply....75
USB-C Power Supply (Sapphire Connect power supply)....76
External Battery Pack....78
Multi-Pump Mounting System....85
Administration Sets....90

3. Fundamental Concepts and Operations....92

Working with the Main Display....92
Using the Keypad....92
Overview of Toolbar Function Keys....94
Overview of Icons....95
Selecting Delivery Mode....98
Enabling Special Features....100
Setting KVO Rate....104

4. Getting Started....106

Typical Workflow....106
Turning the Pump On....108
Turning the Pump Off....108
Connecting the Infusion Container to the Administration Set....109
Opening the Safety Door....110
Inserting the Administration Cassette....111
Removing the Administration Cassette....113
Automatic Priming Using the Pump....114
Priming Manually....116

5. Using the Delivery Modes....120

Continuous Mode....120
Infusion Parameters: Continuous Mode....123
Starting a Continuous Infusion....123
Continuous Mode: Mid-infusion Actions....135

Multi-step Mode 150
Infusion Parameters: Multi-step Mode 151
Starting a Multi-step Infusion 151
Multi-step Mode: Mid-infusion Actions 157
Total Parenteral Nutrition (TPN) Mode 159
Infusion Parameters: TPN Mode 160
Starting a TPN Infusion 161
Intermittent Mode 166
Infusion Parameters: Intermittent Mode 167
Starting an Intermittent Infusion 167
Intermittent Mode: Mid-infusion Actions 174
Patient Controlled Analgesia (PCA) Mode 176
Infusion Parameters: PCA Mode 177
Starting a PCA Infusion 178
PCA Mode: Mid-infusion Actions 184
Epidural Mode 187
Patient Controlled Epidural Analgesia (PCEA) Mode 188
Epidural Intermittent Mode 199

6. Basic Infusion Operations 214

Starting New Infusions: Shortcuts 214
Repeating Last Infusion 214
Using a PreSet Program 216
Resuming Infusions After Pump Shutdown 217
Mid-infusion Actions 218
Pausing Infusions 218
Aborting Infusions 219
Locking the Screen 220
Activating Patient Lockout 221
Ending Infusion 221

7. Options Menu: Configuring, Viewing and Testing224

Main Options: Overview 224
Setting Delivery Mode 225
Managing Configuration Settings 226
Managing Alarm Settings 226
Configuring Audio Settings 229
Configuring General Settings 230
Defining Regional Parameters 234
Testing System Function 236
View Menu 237
Using Special Mode Options 244
PCA Options Menu 244
Epidural Mode Options Menu 245

8. Using Advanced Features 246

Managing Authorization Levels 246
Setting Authorization Lock Levels 248
Password Re-entry 249
Creating and Editing PreSet Programs 250
Using the Set Delay Feature 253
Using the New Patient Feature 257
Monitoring the Accumulated Volume Infused (Shift's Total) 258
Viewing Accumulated VI 258
Clearing Accumulated VI 259

9. Drug Library 260

Overview 260
Clinical Care Area (CCA) 261
Changing a CCA 261
Programming a New Infusion with the Drug Library 265
Drug Name 265
Drugs List 265

Drug Profiles 266
Soft Limit..... 267
Update a New Drug Library Version 268

10. Alarms and Troubleshooting 270

Alarms Overview..... 270
Error – Level 1, High Priority Alarms 271
Alarm – Level 2,High Priority Alarms 272
Messages – Level 3, Low Priority Alarms 275
Troubleshooting..... 277

11. Maintenance and Storage..... 282

Cleaning and Disinfecting the Pump 282
Cleaning and Disinfection Procedure 284
Reprocessing the pump when used by a single patient multiple times286
Cleaning Sapphire Connect and Electric Connectors of Sapphire Accessories 287
..... 289
Preventive Maintenance 290
Routine Inspection and Maintenance Tasks 290
Alarm Testing 291
Certification..... 292
Battery Care Information 293
Battery Classification 294
Battery Safety Information 294
Charging the Battery 296
Battery Maintenance 297
Transport and Storage 297

12. Technical Specifications..... 298

Pump Accuracy 298
Tiered Flow Rate Accuracy Specifications..... 299

Start-up and Trumpet Graphs 301
Pump Specifications 306
Average Bolus Volume After Occlusion 308
Environmental Specifications 309
Operating Conditions 309
Environmental Conditions for Transport and Storage 309
Electromagnetic Compatibility Statement 311
Electromagnetic Emission 311
Electromagnetic Immunity 312

13. Limited Warranty 318

Chapter 1: Introduction

The following sections describe the functions and features of the Sapphire Infusion pump, and provide a summary of safety and regulatory information:

Product Overview and Indications 10
Terms and Abbreviations 14
Document Conventions 16
Safety and Compliance Information 16
Warnings and Safety Precautions 25

Product Overview and Indications

The Sapphire Infusion Pump is intended for controlled delivery through intravascular, subcutaneous, intra-arterial,Perineural and epidural routes. The pump is designed to deliver saline, Total Parenteral Nutrition (TPN), lipids, IV medication,Perineural medication, epidural medication, blood and blood products.

The Sapphire Infusion Pump includes the following infusion modes for all intended uses: Continuous, Intermittent, TPN, PCA, Multi-step, and Epidural.

The pump is intended to be used by both licensed health care professionals and lay users. The pump is intended to be used in the following environments: clinical, ambulatory, pre-hospital, air and ground transportation and home.

The dedicated Eitan Medical Sapphire administration sets for the Sapphire Infusion Pump are intended for single-patient use and single-use only.

This user manual supports the use of Sapphire software version r1~~5~~6.~~1~~0. Verify that the software version that appears on the Sapphire turn-on screen is r1~~5~~6.~~1~~0. The version number can be viewed from **View system** as well (for more information, refer to View Menu on page 237).

This software version is intended for use only in the US.

Clinical Benefits

The pump offers significant advantages over manual administration of fluids, including the ability to deliver fluids in very small volumes, and the ability to deliver fluids at precisely programmed rates or automated intervals, thus increasing patient safety.

These and other pump features result in the following benefits:

- Consistent medication flow rates within a stated accuracy range
- Reduction of medication treatment errors
- Simplification of treatment profiles (delivery modes)

Contraindications

The pump has no contraindications.

Dedicated Delivery Mode Configurations

To promote safety and convenience of use in different environments, the Sapphire Infusion pump can be preconfigured to support only certain delivery modes. The different types of configurations available on various pump types, are described in the following table.

Pump Type	Delivery Modes Supported
Multi-therapy	1 or more of the following: • Continuous • Intermittent • TPN • PCA • Multi-step • Epidural
Epidural	• PCEA • Intermittent Epidural

Each delivery mode is assigned a unique color that appears on the Indicators Bar, helping users to easily differentiate between the different modes (Figure 3.1 on page 99).

Features

The features of the Sapphire pump are designed to simplify treatment and ensure patient safety.

Treatment-Related Features

- **Single platform device:** The delivery mode of the pump can be changed, according to the required type of infusion.
- **Priming alternatives:** Both manual priming (by gravity) and automatic priming (using the pump) are available.
- **Quick infusion titration (in most delivery modes):** Modification options allow updating of infusion parameters without stopping the infusion.
- **Delayed Infusion:** Allows users to program an infusion in advance, and set it to Standby for an unlimited time period, or to set it for a defined Delayed Period.
- **Repeat Last Infusion:** Automatically saves the parameters of the last infusion, and allows a quick-start infusion using these parameters.
- **Resume Infusion After Pump Shut Down:** Allows resuming an infusion after the pump has been shut down from a running or paused infusion.
- **PreSet Programs:** Allows saving the infusion parameters of commonly used protocols, and allows a quick-start infusion using these parameters.
- **Piggyback (Continuous delivery mode only):** Provides the ability to add a Secondary line to a running continuous infusion, without re-entering infusion parameters for the Primary line.
- **Flexible programming features (excluding TPN mode):**
  - Infusions can be programmed in a variety of dose rate units, including the following, per different time units: mL, mg, mcg, units, mUnits, Million Units, gram, nanogram, mmol, mEq.

- Infusion rate can be programmed as a weight based infusion (patient weight can range from 0.1- 500 Kg).
- PIEB – epidural infusion can support the combination of programmed intermittent doses with patient controlled boluses.

Safety-Related Features

- **Lock Screen:** Avoids inadvertently activating screen functions by locking the screen when the infusion is running.
- **Patient Lockout:** Prevents unauthorized tampering with the pump by locking pump functions. Password entry is required to reactivate the screen. This option can be configured to automatically activate once an infusion begins.
- **Authorization lock level:** Allows access to only those pump functions for which the user has authorization. Authorization levels (Low, Medium, High, Technician) are password-controlled.
- **Range parameter safety check:** Prevents entering infusion parameters that are outside of a precalculated safety range. The permitted ranges vary according to the parameters already entered by the user, or by the limits defined in the Drug Library, if one is installed on the pump.
- **Easy alarm troubleshooting:** Alarm screens display specific instructions about how to manage the alarm or resolve the problem.
- **Drug Library:** Enables safer practice according to clinical care area. Programming is done with drug specific name, profile, hard limits and recommended (soft) limits.

Terms and Abbreviations

The following table defines common terms and abbreviations used in this manual.

Term/Abbreviation	Meaning
AFFV	Anti-Free-Flow-Valve
AC/DC	Alternating Current / Direct Current
Accum.	Accumulated
CCA	Clinical Care Area
DFU	Directions for Use
EBP	External Battery Pack
ECG	Electrocardiogram
Eitan Medical Sapphire administration set	Sapphire administration set
EMC	Electromagnetic compatibility
EMI	Electromagnetic interference
Epi. Int	Epidural Intermittent
h	Hour
Kg	Kilograms
KVO	Keep Vein Open
mcg	Micrograms
mEq	Milliequivalents
min	Minutes
mg	Milligrams
mL	Milliliters
mmol	Millimoles
Mounting System	Sapphire Multi-Pump Mounting System
MRI	Magnetic Resonance Imaging
mUnits	Milliunits

Term/Abbreviation	Meaning
M Units	Million Units
nanog	Nanograms
Occ.	Occlusion
PAV	Pressure Activated Valve
PC	Personal Computer
PCA	Patient Controlled Analgesia
PCEA	Patient Controlled Epidural Analgesia
PIEB	Programmed Intermittent Epidural Bolus
Prim.	Primary
RFID	Radio Frequency Identification
Sec.	Secondary
TPN	Total Parenteral Nutrition
VI	Volume Infused
VTBI	Volume To Be Infused
Eitan Medical	Eitan Medical Ltd.
Sapphire pump	Eitan Sapphire infusion pump family

Document Conventions

The following messages in this manual prompt readers to pay special attention to specific points:

	Warnings indicate instructions for serious adverse reactions and potential safety hazards which, if not followed, may result in personal injury.
	Cautions indicate instructions which, if not followed, may result in damage to the equipment or to the quality of treatment.
	Notes provide additional information to help obtain optimal equipment performance.

The parameters ranges described in this manual reflect their factory default settings. These ranges may be configured by an authorized technician.

Safety and Compliance Information

The following section presents important labeling, safety and compliance information:

- Symbols and Labeling on page 17
- Compliance and Classification on page 23
- Biocompatibility on page 24
- Sterilization on page 24
- Degree of Protection Against Ingress of Water and Dust on page 24

Symbols and Labeling

The following table describes the labels and symbols that appear on the Sapphire pumps and their components, and identifies their locations on the equipment.

Symbol	Description	Location
	Electromagnetic radiation from the device is below the limits specified by the Federal Communications Commission	Back of Sapphire Connect.
	Input current	Front of Sapphire Connect
	Output current	Front of Sapphire Connect
	Direct current	Front of Sapphire Connect
SN	Serial number.	Back of the pump casing, on the front of Sapphire Connect, and on the back of the mini cradle.
	CE certification mark.	Back of the Sapphire Connect

Symbol	Description	Location
MD	Medical Device ; Location.	Back of the Sapphire Connect.
REF	Catalog Number.	Back of the pump casing, on the front of Sapphire Connect, on the back of the mini cradle, EBP, PCA Lockboxes 100, 250 and 500mL, and Mounting System.
EC REP	Authorized representative in the European Community.	Back of the Sapphire Connect.
LOT	Batch code.	Inside casing of the mini cradle, EBP, PCA Lockboxes 100, 250 and 500mL, and Mounting System.
!	Caution: Consult accompanying documents for safety instructions (service to be performed by qualified technician; consult Service Manual before removing cover).	Back of the pump casing cover, EBP, on the back of the mini cradle, and Mounting System.
	Storage temperature range.	Shipping package.

Symbol	Description	Location
	Storage humidity range.	Shipping package.
	Storage atmospheric pressure range.	Shipping package.
	Consult instructions for use.	EBP, on the back of the mini cradle, and PCA Lockbox 500mL.
	Follow instructions for use.	Back of the pump casing, on the back of Sapphire Connect, PCA Lockbox 250mL, and Mounting System.
C US	The C and US indicators adjacent to the CSA mark signify that the product has been evaluated to the applicable CSA and UL standards, for use in Canada and the United States.	Back of the pump casing and Mounting System.
	Date of manufacture (year).	Back of the pump casing.

Symbol	Description	Location
	Name of manufacturer.	Back of the pump casing, on the back of Sapphire Connect, on the back of the mini cradle, EBP, PCA Lockboxes 100, 250 and 500mL, and Mounting System.
	Identify defibrillation proof and degree of protection against electric shock. Equipment Type BF Applied Part.	Back of the pump casing.
	Input: 100-240 V; 50-60 Hz; Max. 120 VA Output: 10V DC; Max. 4.7 A.	Mounting System.
IP24	Dust and splash proof.	Back of the pump casing, and front of the Sapphire Connect.
IPX1	Waterproof rating.	Mounting System.
IPX2	Waterproof rating.	EBP.
Rx Only	US federal law restricts this device to prescription only.	Back of the pump casing, on the back of the Sapphire Connect, on the back of the mini cradle, PCA Lockboxes 100, 250, and 500mL.

Symbol	Description	Location
	Waste Electrical and Electronic Equipment (WEEE) Disposal. This symbol indicates that used batteriesc and electronic equipment must not be disposed of as unsorted municipal waste, and must be collected separately. Contact an authorized representative for information concerning the decommissioning of your equipment.	Back of the pump casing cover, on the back of Sapphire Connect, EBP, and on the back of the mini cradle.
ALARM	Alarm — LED, when lit, indicates an alarm situation in the operation of the pump. Refer to Hardware and Software Components on page 37.	Front casing of the pump, below the red LED.
CHARGE	Charge — LED, when lit, indicates that the battery is charging. Refer to Hardware and Software Components on page 37.	Front casing of the pump, below the yellow LED.
RUN	Run — LED, when lit, indicates that the pump is infusing. Refer to Hardware and Software Components on page 37.	Front casing of the pump, below the green LED.
STOP	Stop — Allows you to temporarily stop the infusion.	Front casing of the pump, below the touch screen.

Symbol	Description	Location
On/Off	On/Off — Turns pump On and Off.	Front casing of the pump, below the touch screen.
	MR Unsafe (Do not use in MR environment)	Back of the pump casing, and the back of Sapphire Connect.

Compliance and Classification

This manual has been written in conjunction with the requirements in the International Standard, IEC 60601-2-24 for Medical Electrical Equipment - Part 2-24: Particular Requirements for Safety of Infusion Pumps and Controllers. Data presented in the Technical Specification section reflect specific test conditions defined in this standard. Other external factors, such as varying back pressure, temperature, head height, set usage, fluid restrictions, solution viscosity, or combinations of these factors may result in deviations from the performance data presented.

- UL 60601-1 and CAN/CSA C22.2 601.1-M90 medical electrical equipment, which classifies the Sapphire pump as:
  - Class II
  - Type BF
  - Continuous operation
  - IP24 dust and splash proof
  - Not suitable for use in the presence of flammable anesthetic mixture with air or with oxygen or nitrous oxide
- IEC 60601-1-2: Electromagnetic compatibility.
- IEC 60601-2-24: Infusion pumps and controllers, which classifies the Sapphire pump as a Type 4 pump (continuous infusion flow, combined with bolus delivery).
- IEC 60601-1-11: Requirements for medical electrical equipment and medical electrical systems used in the home healthcare environment.
- IEC 60601-1-12: Requirements for medical electrical equipment and medical electrical systems intended for use in the emergency medical services environment.
- IEC 60601-1-8: Requirements for alarm systems in medical electrical equipment and medical electrical systems.
- Defibrillator compliance statement: Equipment Type BF Applied Part.

Biocompatibility

All materials in components of the administration sets that are in the fluid pathway have been tested for biocompatibility, and are in compliance with applicable international standards ISO 10993-1 for biocompatibility.

Sterilization

Administration sets that are manufactured by Eitan Medical for the Sapphire pump, are sterilized with ethylene oxide (EO), according to the sterilization requirements of ISO 11135.

Degree of Protection Against Ingress of Water and Dust

The Sapphire pump meets the IP24 splash/dust standard according to IEC 60601-1-11. Protects from water which is sprayed at 10 L/min at a pressure of 80-100 kN/m2 for 5 minutes at all angles, and protects from touch by objects greater than 12 millimeters such as fingers.

Warnings and Safety Precautions

The following sections contain important safety information.

All warnings and safety precautions should be read carefully before operating the Sapphire ~~pump~~Infusion System:

- General Warnings and Precautions on page 25
- Proper Use of the Pump on page 30

Safety information specific to particular pump functions appears in the relevant sections of this manual.

General Warnings and Precautions

To ensure safety and proper operation, read the User Manual and any instructions accompanying disposables or accessories before operating this device. In addition, adhere to the following safety guidelines:

⚠	Avoid placing the administration set or power cord on the floor, or any other location where it can accidentally be damaged or provide a risk of strangulation, particularly due to excessive length.

- To avoid damage to the pump and its accessories, keep the equipment away from unattended children and pets.
- Do not clean, disinfect or sterilize any part of the pump by autoclaving, or with ethylene oxide gas. Doing so may damage the pump and void the warranty. Only external parts of the pump should be disinfected.

⚠	If the pump is dropped or appears to be damaged, it should be taken out of service and inspected by Eitan Medical Ltd. trained, qualified personnel only.

- All service procedures, including certification, calibration, part replacement and modification of equipment, should be carried out only by a qualified service technician. Detailed instructions are available in the service manual.
- Do not operate the pump with the safety door open.

Security

- Do not disclose passwords for High Medium or Technician authorization to patients, home users or any other unauthorized personnel.
- Do not operate the pump in clinical use under the Technician mode. The pump must not be in the Technician mode when outside of the Service or Repair lab! If the pump is in clinical use, and the pump display indicates that it is in the Technician mode, **immediately** turn OFF the pump; then, turn it ON again, in order to log out of the Technician mode.
- Unless the pump is required to be connected to facility's wired data system, before using it for clinical use, pay attention to the following:
  - Unexpected message or icon concerning the pump being connected to the PC.
  - Any cable connected to the pump or to the cradle serial ports.

Waste Disposal

Take care to dispose of the packaging, the administration sets, the battery, and any other electronic components in accordance with applicable environmental laws (such as the WEEE Directive for Waste Electrical and Electronic Equipment). Contact your local authority to determine the proper method of disposal.

Waste Disposal Safety Warnings

- Keep used plastic infusion containers, packaging and tubing out of the reach of children.
- Administration sets should be disposed of in a proper manner, considering the nature of residual fluid that may be contained within, in accordance with hospital disposal practices.
- Do not dispose of the battery in or near fire.

Explosion Hazard

The equipment is not suitable for use in the presence of flammable anesthetic mixture with air or with oxygen or nitrous oxide.

Electric Shock Hazards

To promote safety, always adhere to the warnings listed below.

Electrical Safety Warnings

- Access to any internal part of the Sapphire pump and the performance of any service procedures should be carried out only by a qualified service technician, fully trained in the operation of the infusion pump.
- Disconnect the power supply before servicing.
- Disconnect the battery prior to opening the pump casing. Voltage present on internal components may cause severe shock or death on contact.
- Connect AC power to the pump only via a dedicated Sapphire power supply.
- Do not touch the pump to cradle (P2C) connection in the back on the pump.

Electromagnetic Compatibility

The Sapphire pump is designed to conform with electromagnetic compatibility (EMC) standard IEC 60601-1-2 and to operate accurately in conjunction with other medical equipment which also meets the requirements of this standard. To avoid electromagnetic interference that may affect the operation of the pump, do not use the pump near sources of strong electric and magnetic interference (EMI), such as MRI, CT, diathermy, electromagnetic security systems (e.g metal detectors), radio frequency identification (RFID), electrosurgery devices, lithotripsy devices, and large electric motors.

Portable and mobile RF communications equipment, such as RF emitters, cellular telephones, 2-way radios, Bluetooth™ devices, microwave ovens in close proximity to this device may affect wireless communications with the Infusion pump and/or the operation of the Infusion pump.

i	Some of these EMI sources (mostly RF emitters) may not be visible and the device can potentially be exposed to fields from these EMI sources without the user's awareness.

Special precautions need to be exercised regarding EMC. These include:

- Maintaining a minimum separation distance of 2 ½ ft (¾ m) between the Infusion pump system and portable/mobile RF communications equipment.
- Manage the electromagnetic environment to permit the device to perform as intended without disturbing other equipment.
- Separate the device from all other electronic equipment. If the device must be used near other electrical equipment, monitor the equipment to ensure there is no electromagnetic interference.
- Devices should not be used adjacent to or stacked with other equipment. If the device must be used adjacent to or stacked with other equipment, monitor the device to verify normal operation.
- If you identify or suspect that external RF sources or other equipment are influencing device operation (from known or unknown sources), try to (as applicable) increase the pump's distance from the EMI source, re-orient the

device, relocate the device, connect the device to a different outlet, contact the biomedical engineering department for additional guidelines concerning electromagnetic immunity or decrease emitting device output power (to 30 dBm).

- Contact the biomedical engineering department for additional information in the service manual concerning operating devices near RF sources.

The EMC limits, as defined by IEC 60601-1-2/EN 60601-1-2 (4th edition), are designed to provide reasonable protection against harmful interference in a typical medical installation. The equipment generates uses and can radiate radio frequency energy, and if not installed and used in accordance with the instructions, may cause harmful interference to other devices in the vicinity. However, there is no guarantee that interference will not occur in a particular installation. If this equipment does cause harmful interference with other devices, which can be determined by turning the equipment Off and On, the user is encouraged to try to correct the interference by one or more of the following measures:

- Reorient or relocate the receiving device
- Increase the distance separating between the equipment parts
- Connect the equipment to an outlet on a circuit different from that to which the other device(s) is connected
- Consult the manufacturer or field service technician for help

Electromagnetic Safety Precautions

- Do not expose the pump to therapeutic levels of ionizing radiation, as permanent damage to the pump electronic circuitry may occur. Remove the pump from the patient during therapeutic radiation sessions.
- Do not use the pump in the vicinity of magnetic resonance imaging (MRI) equipment, as magnetic fields may adversely affect the operation of the pump. Remove the pump from the patient during MRI procedures, and keep it at a safe distance from magnetic energy.

Proper Use of the Pump

Using the pump not according to its labeling or intended use might result in the following side effects: pain, exacerbation of illness, injury or harm, stroke, electrocution, exsanguination trauma and death. Although the Sapphire pump has been designed and manufactured to exacting specifications, it is not intended to replace trained personnel in the monitoring of infusions.

⚠	Home users must be trained by their medical provider before using the Sapphire pump.

⚠	Clinicians are advised to verify the proper route of delivery, and the patency of the infusion site. The administration route and infusion parameters are determined by the clinician, based on the needs of the patient.

When using the pump, periodic patient monitoring must be performed by healthcare providers, based on clinical practice, to ensure that the infusion is proceeding as expected. For home users in an ambulatory environment, monitoring may be provided by means of a visiting or an on-call nurse, training of patient or relative, or any other means specified by the provider of the devices, based on suitable clinical practice for said environment. The pump is capable of developing positive fluid pressures to overcome widely varying resistances to flow, such as resistance imposed by small-gauge catheters, ports, filters, or intra-arterial infusions. Although the pump is designed to stop fluid flow when an alarm occurs (High Priority alarm), it is neither designed nor intended to detect infiltrations or extravasations, and such conditions will not trigger an alarm.

⚠	When using the pump, use only Eitan Medical approved accessory equipment.

⚠	If auditory and/or visual signals do not perform according to settings, or if the hard keys do not perform as expected, do not use the pump, and contact an authorized technician.

Environmental Safety Precautions

- The pump has not been evaluated for use within magnetic resonance imaging (MRI) environments, or with other medical equipment that emits radiation for diagnostic or therapeutic purposes.
- The Sapphire pump has not been evaluated for compatibility with Extracorporeal Membrane Oxygenation (ECMO) systems.
- Use only Sapphire dedicated accessories and cables. The use of accessories and cables other than those specified in this manual, with the exception of cables sold by Eitan Medical Ltd. as replacement parts for internal components, may result in increased emissions or decreased immunity of the pump.

Administration Sets

Before using administration sets, always read and follow the instructions in the User Manual, and the instructions accompanying the administration set and source container. Carefully follow any label copy instructions for loading, removing, and reloading the set, as well as the recommended set change interval.

Use Sapphire standard administration sets listed here or in Eitan Medical's approved list of products: https://eitanmedical.com/.
Alternatively, administration sets from different manufacturers that are regulatory cleared and labeled for use with the Sapphire infusion system, can be used as well. The list of regulatory cleared sets needs to be obtained from the official manufacturer's publication such as manufacturer's website, catalog or any other formally published document.
Using anything other than administration sets regulatory cleared and labeled for use with Sapphire infusion system, may result in operation that is not within the constraints and parameters of the device. Severe injury or death may result from using sets other than those indicated in Eitan Medical's approved list of products. For more information refer to Administration Sets section on page 90.

For infection control purposes, consider the set change interval recommended by the local Centers for Disease Control and Prevention (CDC), your facility guidelines, and the instructions provided with the administration set.

Administration Sets: Safety Warnings

- Do not use a damaged administration set or damaged set components or packaging. Always refer to the instructions for use that are included.
- Sapphire administration sets are for **single patient use only**, and should not be sterilized or cleaned for re-use.
- **Do not connect the administration set to the patient while priming.**
- Do not use force when connecting the administration set to the patient.
- Always use the clamps on the administration set to occlude the administration set prior to removing the Sapphire administration cassette from the pump.
- Do not apply pressure or pressurized air to any outlet or tubing connected to the pump. Pressure may destroy sensitive elements.
- Do not pull or stretch the tubing in any section of the administration set when the pump is in use, nor apply pressure to the infusion container.

The minimum pull force applied on the administration set which is capable of disengaging the administration set from the pump is 2.855 Kg.

- The administration set and container should be replaced as needed to avoid fluid contamination problems.
- The administration set must be replaced according to the hospital policy of infection control and treatment protocol. Sapphire sets allow accurate delivery up to 96 hours. If you program rate, dose or bolus combinations which exceed a 96-hour schedule, make sure that you replace the administration set on time.

Basic Infusion Safety Information

To obtain maximum accuracy of the pump when used in a hospital or clinical environment, verify that the infusion container is positioned at a height of 50 cm above the pump. There is no restriction on the location of the infusion container in relation to the patient's heart.

High Priority alarm conditions automatically stop the infusion and require immediate attention before the infusion can be restarted.

When clamping the administration set, ensure that the clamp is at least 20 cm (8 in) away from the pump, when possible.

Note that if the dose rate is beyond the pump resolution of 0.1mL/h increments, the pump will increase or decrease the rate by up to 0.05 mL/h. This flow rate (mL/h) is presented on the running screen during infusion.

Administering Infusions: General Safety Warnings

- **Occlusion Pressure Alarm Settings:**
  - High pressure settings may affect the time for occlusion detection. Make sure that the occlusion pressure is set according to the clinical use case.
  - When using sets with a Pressure Activated Valve (PAV), detection may be offset by 0.3 BAR (4.35 PSI or 225 mmHg). (This offset is called PAV cracking pressure.)
- **Volume To Be Infused:** Do not enter a volume to be infused greater than the amount of fluid available in the container.
- **Air Detection:**
  - Air detection is an important safety feature of the Sapphire pump. If the air detection is disabled (OFF), **use a set with an air-eliminating filter to prevent injury to the patient due to an air embolus**.
  - Air detection serves as a safety component. Disabling the air detection hinders the pump's ability to alert on hazardous situations.
  - Always ensure that the administration set is primed before starting an infusion.
  - The air detector working range when delivering fatty acids, is 2%-20% lipids.

- **Secondary Infusions:** When using the Piggyback infusion feature, verify that:
  - The medication/solution in the Secondary infusion container is compatible with the medication/solution in the Primary infusion container.
  - The Secondary administration set is connected to the appropriate injection site on the primary administration set (above the administration cassette).
  - Interruption of the Primary infusion is clinically appropriate for the duration of the Piggyback infusion.
  - The Secondary source container is positioned at least 8 inches (20 cm) higher than the Primary source fluid level.
  - The drip chamber on the set should be used to verify that the correct line is delivering and the other line is idle.
  - The clamp of the Secondary set is closed when Piggyback infusions are not running.
- Do not infuse non-epidural drugs in the Epidural Delivery mode.
- Epidural drugs must be infused in the Epidural Delivery mode.
- Use of the device in preterm neonates and those below normal birth-weight i.e., low birth weight (≤2,499 g); very low birth weight (< 1500 g) and extremely low birth weight (<1000g), has not been evaluated and therefore the clinician should assess whether to use the device for these neonatal subsets.

PCA, PCEA, and Epidural Intermittent Delivery Mode

When using the Clinician Bolus and Patient Demand Bolus functions, special safety precautions need to be followed.

⚠	Do not use the Remote Bolus Cord to pick up or carry the cradle or pump. Using the cord in this manner may damage the pump or cord. To avoid damaging the connector or cord, do not use any excessive force or instruments to remove the Remote Bolus Cord from the cradle.

Performing an infusion above 50 mL/h while using a catheter size of 24G or smaller may result in occlusion and delay of care.

In addition, adhere to all the warnings listed below.

PCA, PCEA, and Epidural Intermittent Delivery: Safety Warnings

- Do not place the Remote Bolus Cord where the button might accidentally be pushed. Accidentally pushing the button may deliver an inadvertent demand bolus. This page is left intentionally blank
- When using the Clinician Bolus function, pay close attention to the current treatment parameters, as well as to the amount of additional dosage being administered.
- Do not allow the patient to access the Clinician Bolus function. Do not reveal the Clinician code to the patient.
- The demand bolus option should be used only by the patient. Administration of a demand bolus by anyone other than the patient (especially if the patient is sleeping or sedated) incurs the risk of potentially fatal overdose.

Epidural Delivery Mode

Epidural administration of anesthetics is limited to short term infusion (not to exceed 96 hours) with indwelling catheters specifically identified for short term anesthetic epidural drug delivery.

Epidural Delivery: Safety Warnings

- Epidural administration of drugs other than those indicated for epidural use could result in serious injury to the patient.
- To prevent infusion of drugs not indicated for epidural use, do not use administration sets with injection ports during epidural delivery.
- Do not infuse non-epidural drugs in the Epidural Delivery mode.
- Epidural drugs must be infused in the Epidural Delivery mode.

Chapter 2: Components, Accessories, and Administration Sets

The following sections present a high level overview of the Sapphire pump components and accessories:

Unpacking the Pump 36
Hardware and Software Components 37
Using Pump Accessories 40

Unpacking the Pump

When unpacking the Sapphire pump, inspect each item to ensure that it is undamaged. The following items should be included:

- Sapphire pump (with Li-Ion Battery enclosed)
- AC/DC power adaptor for pump
- User Manual
- Mini cradle, with key (to lock) and pin (to allow open/close without the key)
- Other optional items:
  - Demand bolus handle
  - Splitter for mini cradle
  - Communication cable
  - PCA Lockbox 100mL
  - PCA Lockbox 250mL
  - PCA Lockbox 500mL
  - Infusion Pouch 500 mL
  - Home Large Backpack (5 liter)
  - Travel Case
  - External Battery Pack
  - Mounting System
  - Mini cradle with Integrated Power Supply

Hardware and Software Components

The pump includes both hardware (control unit) and software (touch screen) components. Hardware components are shown in the figure below. The parts of the control unit are listed and described in the table following the figure.

Figure 2.1. Hardware Components

Number	Component	Description/Notes
1	Safety door	Covers and protects the administration set and pumping mechanism.
2	Speaker	Delivers auditory alarm sounds.
3	Status LEDs	Colored indicators providing a summary of the pump current status: • Red: An alarm is occurring. • Yellow (blinking): The battery is charging. • Yellow (steady on): The pump is connected to main power, and the battery is fully charged. • Green: The pump is running.
4	On/Off button	Enables the user to turn the pump On and Off.
5	Stop button	Enables the user to temporarily stop an infusion.

Number	Component	Description/Notes
6	Power socket	Enables you to charge the battery using the power adaptor, connect a communication cable or a bolus handle.
N/A	Battery compartment	Houses the battery. (Located on the back of the pump.)

Touch Screen

The touch screen is used to configure and operate the pump. The main areas of the screen are listed and described in the table following the figure.

Figure 2.2. Touch Screen Areas

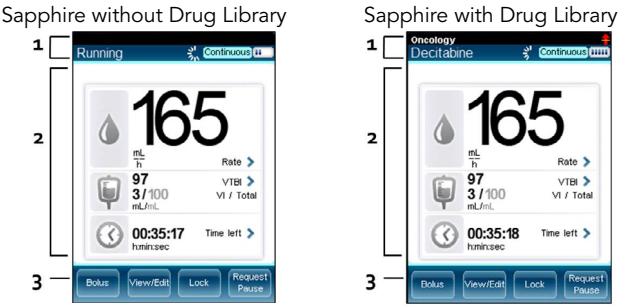

Number	Component	Description/Notes
1	Indicators Bar	Displays the following essential status information: • CCA name (appears above Screen title, across all screens when Drug Library is loaded). • Soft Limit icon (appears above Battery status icon, when Drug Library is loaded and current infusion exceeds soft limit range). • External battery icon (appears above the delivery mode header, when an EBP is connected to the pump). • Screen title (Start Up, Running, Paused, drug name, etc.). • Drug concentration (appears when applicable, under screen title). • Running icon (appears while an infusion is running). • Delivery mode (Continuous, Multi-step, etc.). • Battery status icon.
2	Main Display	Displays infusion parameters and other pump settings, and serves as a work area in which most programming and configuration takes place.
3	Toolbar	Contains function keys that enable you to perform common operations, such as confirming settings, pausing infusions, locking the screen, etc.

Using Pump Accessories

This section explains how to set up the following pump accessories:

Mini Cradle 40
PCA Lockboxes 44
PCA Lockbox 250mL 48
PCA/PCEA/PIEB Bolus Handle 53
Sapphire Connect (Version 1.0) 54
Power Supply 75
Integrated Power Supply 75
USB-C Power Supply (Sapphire Connect power supply) 76
External Battery Pack 78
Multi-Pump Mounting System 85
Administration Sets 90

Mini Cradle

The small, easy to use bedside mini cradle offers flexible positioning of the pump at any angle or height. Eitan Medical's Mini Cradles are provided in one of the following configurations:

- With an optional connection splitter at the base (Figure 2.3, #3).
- With an optional Integrated Power Supply (IPS) at the base (Figure 2.4, #1). The IPS is an AC to DC power supply that is assembled to the Mini Cradle and is used to charge the pump battery.
- Without the optional connection splitter or the optional IPS at the base.

Identify your Mini Cradle configuration by turning the Mini Cradle bottom side up; Mini Cradles with a connection splitter will have two ports, as seen in Figure 2.3 #3. These are used for the RS-232 communication cable and power supply. Mini Cradles with IPS will have power cord connector covered by a power cord retainer, as seen in Figure 2.4, #2. This is used for Sapphire AC power cord.

Components of the mini cradle are listed and described in the table following the figure.

Figure 2.3. Mini cradle

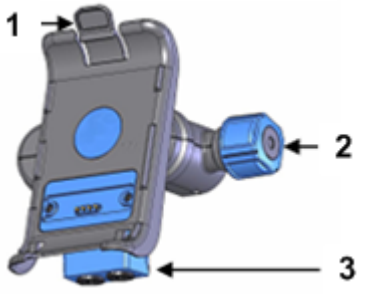

Number	Component Name	Description/Notes
1	Pump hook	Located on the pump holder. Press the hook to release the pump from the mini cradle.
2	Mini cradle knob	Located on the base of the mini cradle. Twist the knob to connect or release the mini cradle from an IV pole. To unlock the knob, use the supplied key or pin.
3	Connection splitter (optional)	Located on the base of the mini cradle. Used for the RS-232 communication cable (optional) and power-supply connections.

Figure 2.4. Mini-Cradle with Integrated Power Supply

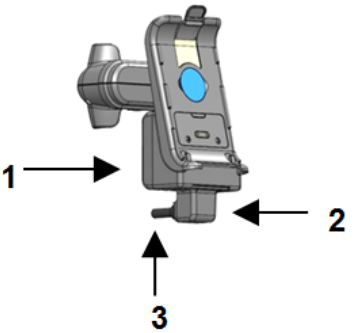

Number	Component	Description/Notes
1	Integrated Power Supply (optional)	Located on the base of the mini cradle. Used for power-supply connection.
2	Cord retainer	Located at the bottom of the integrated power supply. It holds the AC power cord in the IPS power socket.
3	AC Power Cord	Medical Grade AC Power Cord that connected the IPS to the wall socket.

To operate the pump from an IV pole set, attach the pump to the mini cradle. This enables easy access to the screen without the risk of changing the settings through accidental contact. In the mini cradle, you can also charge the pump.

Make sure the cradle is securely attached to the IV pole before attaching the pump.

The following steps explain the workflow of attaching the mini cradle to the IV pole, attaching and releasing the pump, and releasing the mini cradle from the pole:

1. Attach the mini cradle to the IV pole by tightening the mini cradle knob on the right side (Figure 2.3, #2).
   To unlock the knob, make sure that the supplied key or pin is placed inside it.

> To attach several pumps to the IV pole, rotate the mini cradle to a horizontal position:
> Pull the pump holder and the base of the mini cradle away from each other, and rotate to the desired position.

2. To attach the pump to the mini cradle, insert the pump onto the bottom hooks of the mini cradle (Figure 2.5, #1), and then click it into the top hook (Figure 2.5, #2). Ensure that the pump is seated on both hooks.
3. To release the pump, press the pump hook located on the top of the pump holder (Figure 2.5, #2).
4. To open and release the mini cradle, rotate the knob.

Figure 2.5. Mini cradle Hooks

PCA Lockboxes

PCA Lockboxes are designed to secure the IV bag, primarily for treatments involving narcotics or opioids, without interrupting the treatment workflow.

PCA Lockbox 500mL

This Lockbox can accommodate IV bags of up to 500 mL.

Figure 2.6. PCA Lockbox 500mL and Mini cradle

The following steps explain the workflow of using the PCA Lockbox 500mL:

1. Using the mini cradle knob, attach the mini cradle to the IV pole (Figure 2.3 on page 41).
2. To open the Lockbox, swing the blue handle to the left (Figure 2.7, #2).

Figure 2.7. PCA Lockbox 500mL: Workflow

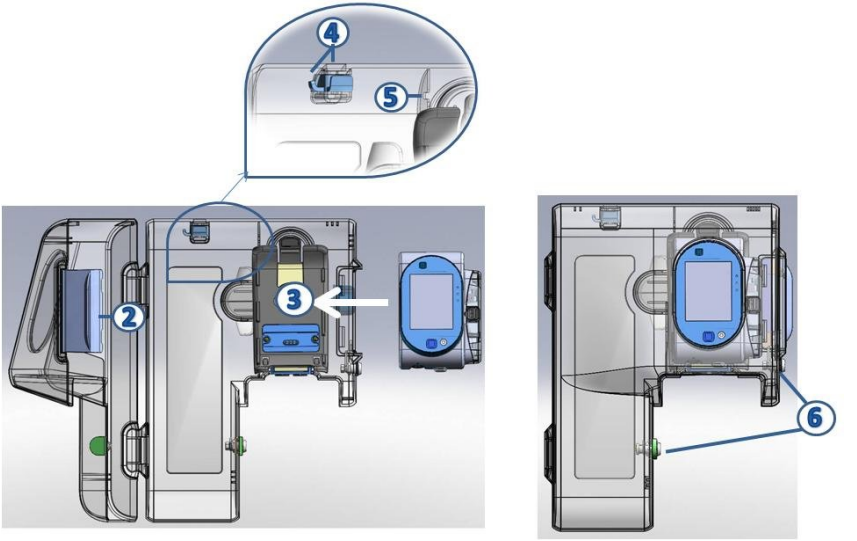

3. Attach the pump to the mini cradle (Figure 2.7, #3).
4. Hang the IV bag with the medication (Figure 2.7, #4) inside the PCA Lockbox.
5. Clamp the administration set, spike the bag, and attach the administration set to the pump.
6. Place the administration set through the hole on top of the pump (Figure 2.7, #5). Verify that there are no kinks in the administration set, so the infusion can run smoothly.
7. Unclamp the administration set. Then, close both locks of the Lockbox and lock it, using the supplied key (Figure 2.7, #6).

PCA Lockbox 100mL

This Lockbox can accommodate IV bags of up to 100 mL.

Figure 2.8. PCA Lockbox 100mL

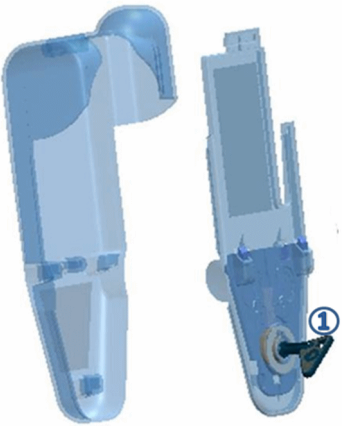

The following steps explain the workflow of using the PCA Lockbox 100mL:

1. Using the key supplied with the Lockbox (Figure 2.8, #1), open the box and remove the plastic cover.
2. Close the clamps on the administration set, and spike the bag.
3. Block the administration set using the AFFV (for more information about the AFFV, refer to: Priming Manually on page 116), and then open the clamps.
4. Insert the container into the box, and wrap the tube around the inner walls of the box, in order to allow free flow and prevent kinks. Then, set the tube through the exit channel (Figure 2.9, #2).

Figure 2.9. Lockbox 100mL: Workflow

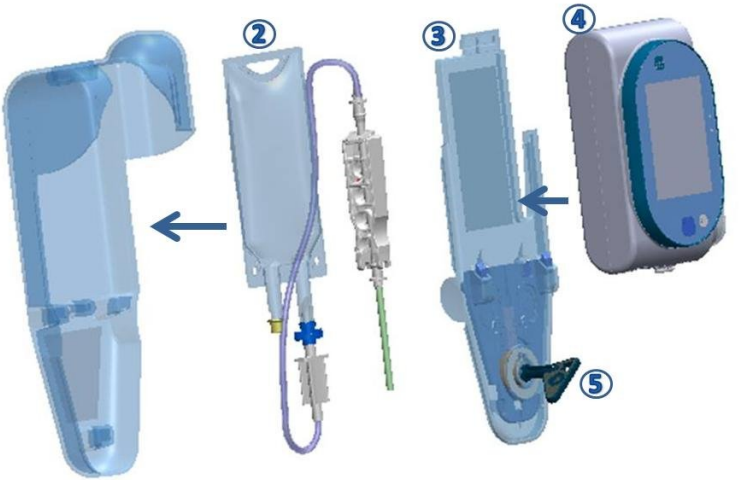

5. Connect the administration set to the pump.
6. Close the box by sliding back the plastic cover (Figure 2.9, #3).
7. Place the pump on the plastic cover (Figure 2.9, #4), and secure it by locking the box with the supplied key (Figure 2.9, #5).

PCA Lockbox 250mL

This Lockbox can accommodate IV bags of up to 250 mL.

- The Lockbox is used in an upright position only; it may be attached to an IV pole, carried by the carry handle, or carried by the shoulder strap.
- Do not use sets with drip chamber or burette with the Lockbox.
- Use the Lockbox with bags up to 250 mL IV that are smaller than 7 cm depth,10 cm width and 24 cm height.

Before setup, it is recommended to clamp the administration set and spike the IV bag.
Priming may be completed manually at this point, or with the pump after set is inserted to the pump.

The following steps explain the workflow for using the PCA Lockbox 250mL:

1. Attach the Lockbox to the mini cradle by inserting the pump compartment back side of the Lockbox onto the bottom hooks of the mini cradle (Figure 2.10A), and then click it into the top hook (Figure 2.10B). Make sure the Lockbox is secured to the mini cradle.

When using with Sapphire Connect, attach the entire unit via Sapphire Connect with the same bottom-to-top action. For more information about using Sapphire Connect, see Sapphire Connect (Version 1.0) on page 54.

Figure 2.10. Attaching the Lockbox to the Mini Cradle

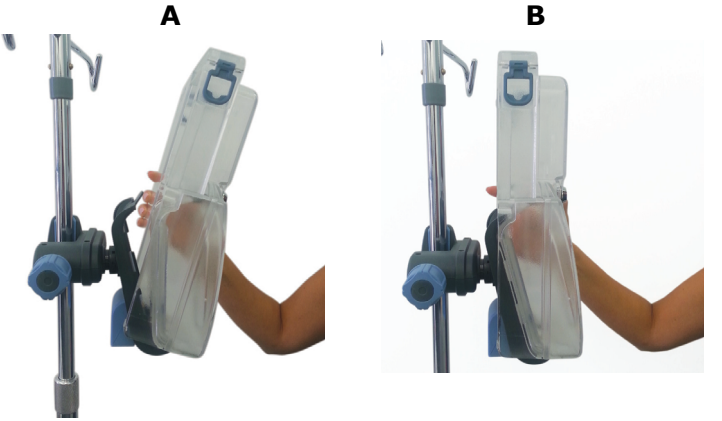

Figure 2.11. Attaching the Lockbox via Sapphire Connect to the Mini Cradle

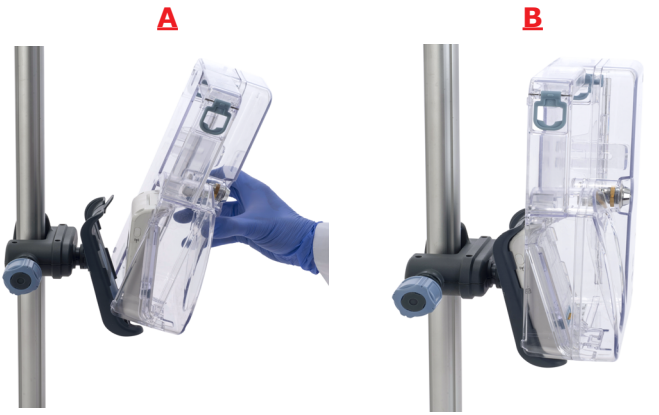

2. Unlock the Lockbox, and open the door.

> To lock and unlock the Lockbox the key must be first pressed inwards before turned.

3. Insert the pump onto the bottom hooks of the Lockbox, and then click it into the top hook.
4. Make sure the organizer is aligned with the inner Lockbox wall (Figure 2.12, #1); Hang the spiked IV bag on the hook inside the Lockbox (Figure 2.12, #2).

Figure 2.12. Placing the IV Bag and Set Inside the Lockbox

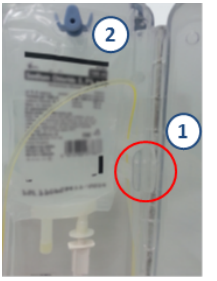

5. Attach the administration cassette to the pump.
6. Insert the set tubing between the IV bag and the pump into the organizer (Figure 2.12, #1).

> Make sure this segment of the set does not contain any additional components.
> Verify there are no kinks in the administration set.

7. Unclamp the administration set.
8. Close the Lockbox door and lock it using the supplied key. Note not to close the Lockbox door on the set itself.

9. Make sure the Lockbox is locked before removing the key.

	Locking the Lockbox with attached mini cradle, locks in the mini cradle as well as the medication. To lock the Lockbox to the IV pole, the mini cradle must be locked to the IV pole.

Removing the Lockbox from the IV pole:

1. Unlock the Lockbox using the supplied key. Then, open the door.
2. To release the Lockbox, press the top hook of the mini cradle. Secure the pump by holding it in the Lockbox while releasing the Lockbox from the mini cradle.
3. Lock the Lockbox using the supplied key.

Figure 2.13. Shoulder Strap

	The Lockbox can be carried using the carry handle or the optional shoulder strap (Figure 2.13). The shoulder strap can be used with a pouch for storing the power supply when it is not plugged in.

	Do not grab the Lockbox by the handle when attached to an IV pole.

	Therapy Identification – to identify the therapy the Lockbox is used for, stick one of the supplied colored stickers to the upper inner side of the Lockbox door. The available sticker colors include: white, blue, red, yellow and green.

4. Optional: When using with Sapphire Connect, remove the lockbox from the cradle by pulling the top hook of the mini cradle. Secure the lockbox by holding it while releasing.

Figure 2.14. Removing the Lockbox from IV pole while using with Sapphire Connect

PCA/PCEA/PIEB Bolus Handle

The remote bolus handle enables patients to deliver boluses on demand (under clinician's programmed limits). The bolus is requested by pressing the button on the handle, eliminating the need for patient interaction with the function keys on the pump.

When pressing the bolus handle, an auditory signal will be generated. This option can be configured on the pump. For more information refer to Configuring Audio Settings on page 229.

Figure 2.15. Bolus Handle

Connect the bolus handle by attaching it to the socket at the bottom of the pump. Make sure that the white arrows or the red dot on the cable connector are facing up (arrows or dot on the bolus cable towards the arrow on the pump).

	When using a mini cradle, the blue-buttoned bolus handle must be connected directly to the pump. When using a gray-buttoned bolus handle, it may be connected to any port; but the Sapphire Connect or communication cable should not be connected simultaneously.

Sapphire Connect (Version 1.0)

Sapphire Connect is an accessory for the Sapphire infusion pump. It is intended for use in clinical, ambulatory, and home environments.

The Sapphire Connect snaps onto the Sapphire infusion pump to enable connectivity. Sapphire Connect's secure connection and wireless capabilities allow Sapphire Connect to wirelessly transmit pump progress events and Sapphire Connect geolocation to Insights Tool*. Sapphire Connect automatically establishes cellular communication when connected to a supported Sapphire Infusion Pump and requires no pre-use setup.

The Sapphire Connect is powered by an independent rechargeable Li-Ion battery, rechargeable via a dedicated USB-C charger. When connected to a Sapphire pump, both the Sapphire Connect and Sapphire pump can be charged via a single power source.

Sapphire Connect supports seamless pump operation, including charging and the use of multiple Sapphire accessories.

Safety Information

⚠	Sapphire Connect is compatible for use only with Sapphire Rev16 pumps manufactured in 2016 or later.

* The Insights Tool is a cloud-based platform that includes modules for pump fleet management and treatment monitoring, which are not covered in this user manual.

General Safety Precautions

- Before using, make sure that Sapphire Connect and its power supply and cord are dry.
- While the Sapphire pump is attached to Sapphire Connect, do not connect the pump to a PC tool or a gray-buttoned bolus handle.
- For information about cleaning with IPA 70%, see Cleaning Sapphire Connect and Electric Connectors of Sapphire Accessories on page 287.
- For disposal information, see Waste Disposal on page 26.
- Eitan Medical Ltd. has not approved any changes or modifications to this device by the user. Any changes or modifications could void the user's authority to operate the equipment.

Components

Figure 2.16. Sapphire Connect Components

#	Name	Description
1	Bottom hooks	Attaches to the Sapphire pump.
2	Top hook	when pressed, releases the pump.
3	Power button	When pressed, turns Sapphire Connect ON/OFF.
4	Communication LED	Indicates the communication status.
5	Charging LED	Indicates charging status.
6	USB-C port	For connection to the power supply.

Preparing Sapphire Connect for Use

Charging Sapphire Connect

1. Charge Sapphire Connect by connecting the Sapphire Connect power supply. The charging LED blinks during charging and steady when fully charged (for more information, see **USB-C Power Supply (Sapphire Connect power supply)** on page 76.

Figure 2.17. Charging Sapphire Connect

To preserve battery life, connect Sapphire Connect to a power supply whenever possible.

Sapphire Connect can also be charged via a power supply connected to a mini cradle with splitter or mini cradle with IPS (Figure 2.18, A). Connecting a charger directly to the Sapphire pump will only charge the Sapphire pump battery and will not charge the Sapphire Connect (Figure 2.18, B).

Figure 2.18. Charging Sapphire Connect through Mini-Cradle

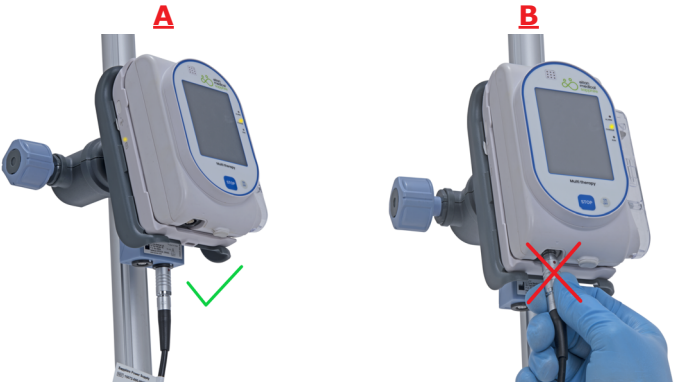

2. Proceed to **Connecting to the Pump**, below.

Connecting to the Pump

1. Turn Sapphire Connect ON by pressing the power button once.
2. The Sapphire Connect will run a self-test and establish cellular communication. During this time, the communication LED should blink blue. This process should take up to one minute.
3. The communication LED turns steady green for 20 seconds, indicating that the self-test and cellular connection were successful (If not, see **Troubleshooting** on page 68).
4. The communication LED turns steady blue, indicating that Sapphire Connect is ON and that both the cellular connection process and self-test have ended.
5. Attach Sapphire Connect to the pump by inserting the bottom of the pump onto the Sapphire Connect bottom hooks (**Figure 2.19**, A). Press the top of the pump back until it clicks into place on the top hook (**Figure 2.19**, B).

Figure 2.19. Attaching Sapphire Connect to Pump

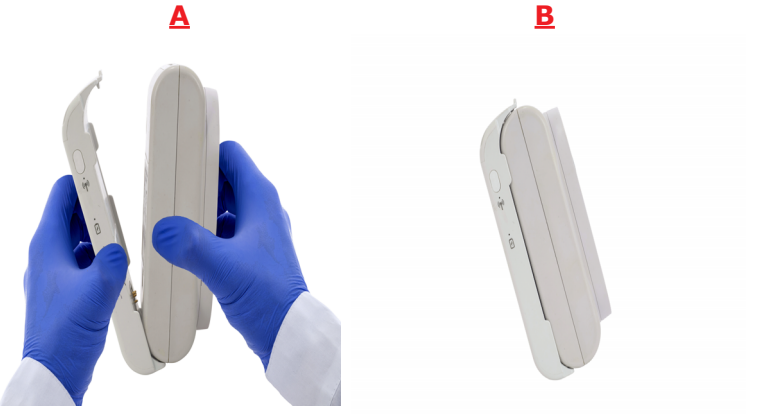

6. Wait for 15 seconds; then, verify that the communication icon appears on the Sapphire pump screen (Figure 2.20).

Figure 2.20. Communication Icon on Pump Screen

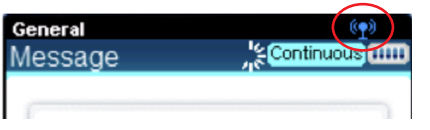

Removing Sapphire Connect

1. Hold the pump firmly.
2. Pull back on the top hook, until the pump is released (Figure 2.21).

Figure 2.21. Releasing Sapphire Connect from Sapphire Pump

3. To turn off Sapphire Connect, press-and-hold the power button for 5 seconds. The communication LED turns off.

Sapphire Connect needs to be turned On to allow data transmit.

---

4. After 90 seconds, the communication icon is no longer displayed on the pump screen.

Using Sapphire Connect with Other Accessories

Sapphire Connect is designed to work with multiple Sapphire accessories such as Mini-cradle, Bolus Handle, and Lockbox 250mL, by supporting the same connection mechanisms.
Sapphire Connect cannot be used with the PCA Lockbox 100mL and gray buttoned bolus handle.

Mini-Cradle

> When the pump is connected to Sapphire Connect, it can still be charged via a power enabled Mini-Cradle. For more information, see Power Supply on page 75.

> To use with a mini cradle, assemble in this order:

1. Make sure that the mini cradle is attached to the IV pole (see Mini Cradle on page 40).
2. Attach the pump to Sapphire Connect (see Connecting to the Pump on page 58).
3. Attach Sapphire Connect to the mini cradle, using the same bottom-to-top action (Figure 2.22). Make sure that the combined pump-Sapphire Connect unit is seated securely on both hooks of the mini cradle.