Product Instruction

Model：TT-300

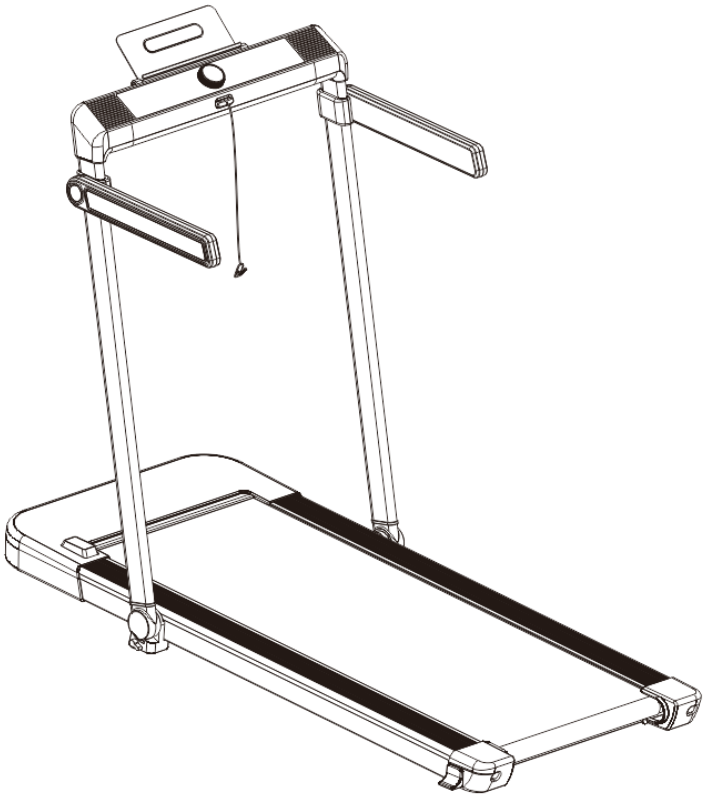

Please read the instruction carefully before using,

Pictures for reference only

Content

1. Security cautions.....1

2. Quality Assurance Commitment.....2

3. Configuration list and technical parameters.....3

4. Product parts.....3

5. Assembly instructions.....5

6. Instructions for use.....5

7. Function description.....7

8. Warm-up exercise.....8

9. Maintenance guide.....10

10. Error code……..…..…10

Thank you for purchasing our product, our products will help to improve your health.

1. Security cautions

- In order to ensure your safety and avoid accidents, please read the instructions carefully before use.
- This product is indoor use only, please do not make it or use it outdoors; the treadmill should be placed in a flat and clean position, do not put it in a thick carpet or near water area, there should be 3-6ft barrier-free safety area behind the treadmill.
- This product is for adults, minors need adult care. It is forbidden for those who feel unwell or mentally handicapped or lack common sense to use it. Unless they are under the supervision or guidance of the person responsible for their safety regarding the use of the product.
- If the power cord is damaged, in order to avoid danger, it must be replaced by the manufacturer or professional maintenance personnel.
- This product is only used for 100V-120V AC voltage. Please use the power socket with safe ground line. The installation and grounding of the grounding plug must be consistent with the parameters of the user's area. If the plug and socket are incompatible, please arrange qualified electricians or after-sales personnel to handle it.
- Check all parts before use to ensure that the screw and nut are locked
- When using it, please wear comfortable and tight clothes to avoid the clothes being hung by the machine. Don't let children or pets come near to avoid accidents.
- Avoid all moving parts with both hands. Do not place hands or feet in the space under the running belt.
- This product is designed for family use only, but not suitable for professional training and testing, and can not be used for medical purposes.
- The heart rate display of this product does not provide data for medical purpose.
- This product is only for one person on the running belt.
- Before cleaning and maintenance, please shut down and unplug the power plug.
- Shut down the machine and unplug the power plug when you leave.
- Please use the spare parts provided by the original factory. It is strictly forbidden to replace them privately.
- This product is of HC grade, and maximum user’s weight is 240LBS.

2. Quality Assurance Commitment

- We ensure that the product is made of high quality materials.
- In normal use, if there is a problem, we will be responsible for the warranty.
- The warranty period is one year (from the date of purchase). If you buy products with quality problems, please contact our customer service within 12 months. Please do not deal with them without permission.

- The followings are not covered by the warranty:

◆ Damage caused by external factors.
◆ Use non-original accessories.
◆ Privately handled incorrectly.
◆ Not follow the instructions.

- This pledge is valid only for private use by families and is not applicable to professional training such as gyms.

If you need to buy non-warranty accessories, please contact customer service. Please provide the following information when ordering:

- Instructions.
- Product model.
- Fittings serial number.
- Certificate of purchase date.

Before the confirmation of our customer service, please do not send the products to our company, and send them back without permission. Our company does not bear any cost.

3. Configuration list and technical parameters

1. Walkingpad configuration

Parts Name	Sketch (for reference)	QTY
Walkingpad machine		1
Handrails (1 each on left and right)		2
Instructions		1
Safety lock		1
Inner hexagon spanner		1
Silicone oil	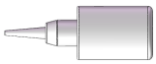	1
Bolt (M8*25)		2
Acrylic sticker cover		2

2. Technical parameters

Para name	Parameters
Packing dimension	60.82*29.92*6.4 inch
Folded dimension	58.66*28.86*4.9 inch
Unfolded dimension	54.33*28.86*43.9 inch
Running area	17*42.52 inch
maximum power	550 W
Speed range	0.6-7.6 MPH
Max capacity	240LBS
Net/Gross weight	65.1 /77 LBS

4. Product parts

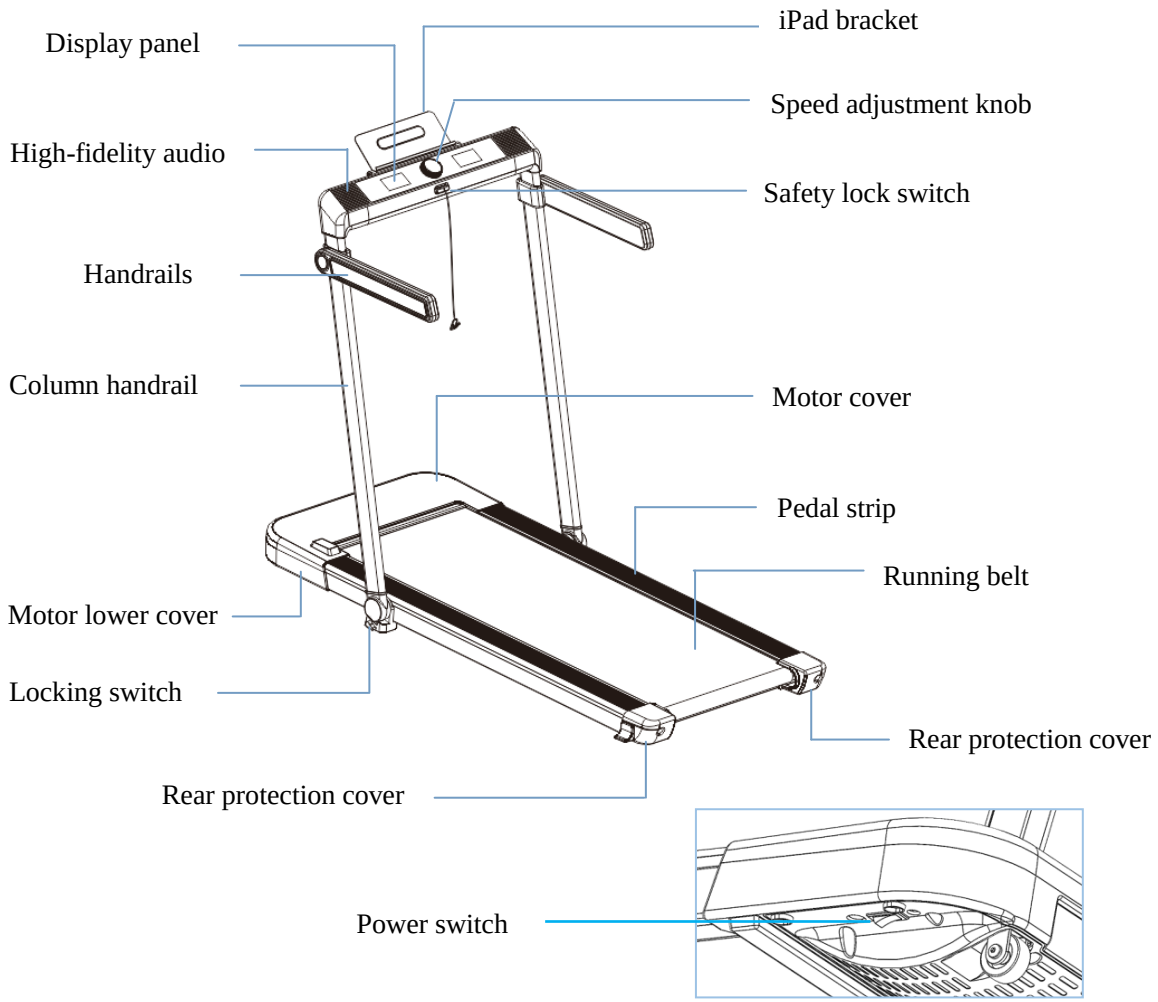

5. Assembly instructions

Assembly steps

Step 1: Column armrest assembly

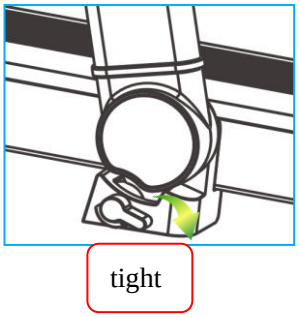

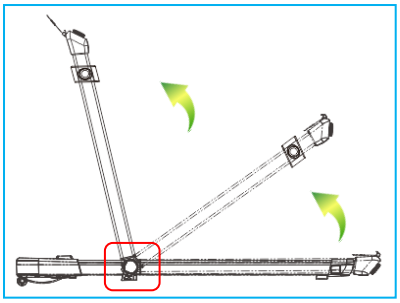

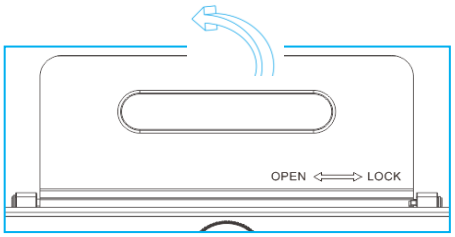

OPEN ⟷ LOCK

1. Open the packing box, remove the relevant accessories and machine from the box, and place the machine on flat floor, without assembly
2. To lift up the handle to can't be removed anymore
3. Hold the column tube with one hand and turn the lock switch back and forth in one hand, and hit the OFF position (the left and right sides operate the same). Column armrest
4. Push the iPad bracket to the OPEN direction, rotate it outward, and then release it to LOCK to limit it.

Step 2: Armrest assembly

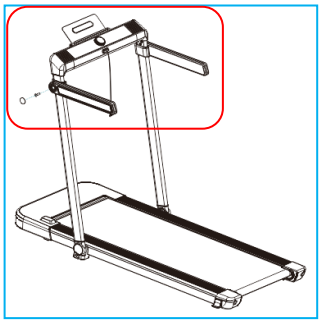

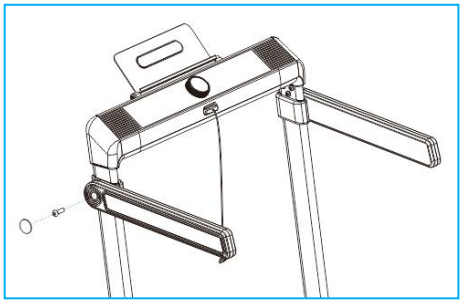

Take the left armrest and install it into the left column, use an L-shaped hex wrench to lock the M8*25 screw in, fix the left armrest tightly, and then take the acrylic cover to attach it. The right armrest assembly is the same as the left armrest assembly.

Machine assembly completed

Treadmill folding

When the treadmill is not in use for a long time, the machine can be folded and placed to save space or put it in a suitable place for storage.

Step 1: folding the armrest

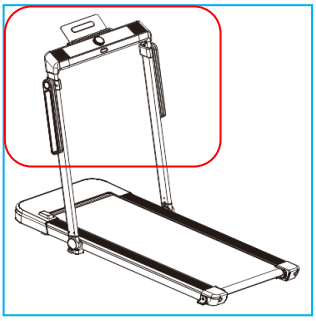

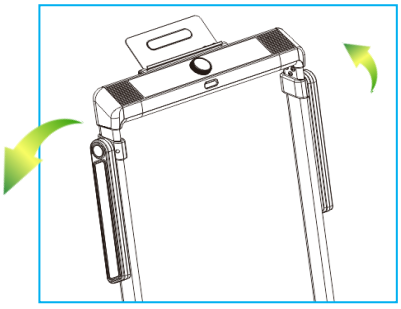

Rotate the left and right armrests counterclockwise respectively by hand.

Folding steps

Step 1: fold the handle down to the plate

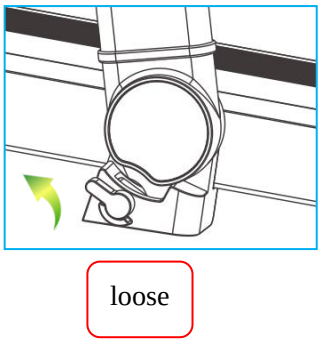

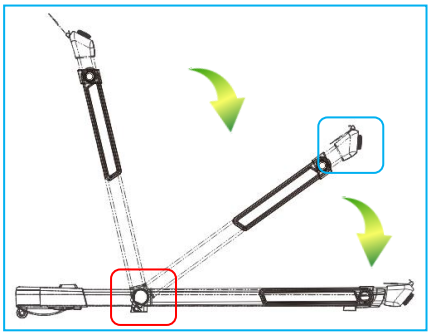

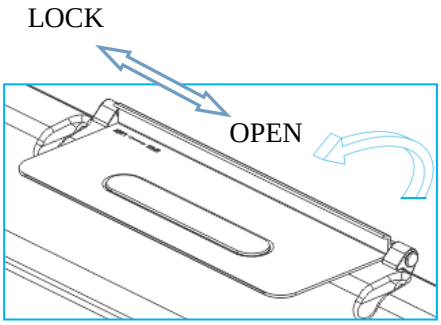

1. Hold the column tube with one hand, and turn the lock switch forward in one hand, and hit the ON position (the left and right sides operate the same)

2. Push the iPad bracket to the OPEN direction, rotate it inward, and then release it to LOCK to limit it.

Step 3: Hold the column tube with your hand and fold it back to lay it flat

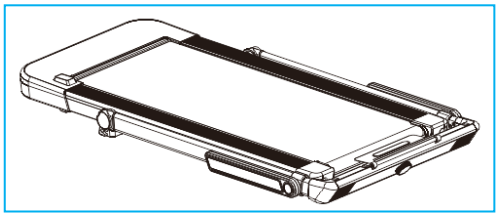

Machine folding completed

6. Instructions for use

Use a walking machine

Plug in the power, turn on the power switch, the switch will light up, then you will hear "beep" is heard, the instrument will light up.

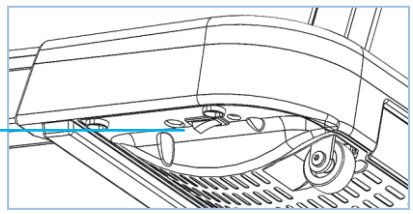

Safety lock

The treadmill will only work if the safety lock is completely placed on the slot on the dashboard. Clip the clip of the safety lock to your clothes. In the unlikely event of an accident, pull off the safety lock to immediately stop the motor. If you want to continue using the treadmill, put the safety lock back.

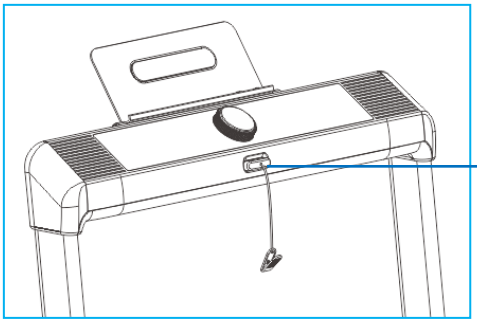

7. Function description

Dashboard function

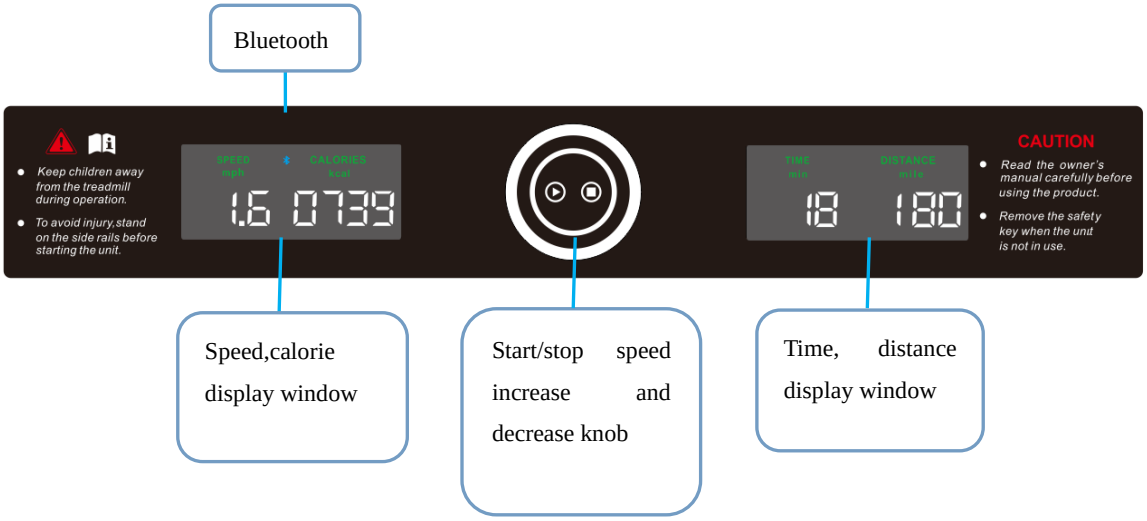

Operation function：

Turn on the power, all windows will light up for 2 seconds, and then enter the standby state.

Closing the red safety lock switch, press“ ”button，After a countdown of 3 seconds, the treadmill starts running from the lowest speed；Rotate clockwise“ ”knob，speed up；Rotate counterclockwise“ ” knob，Slow down (speed is accelerated by 0.2 mile or Decelerate); to stop running, press“ ”button or disconnect the red safety lock switch directly, the machine will stop slowly .

When the phone is connected to Bluetooth music, press the volume down button during playback to decrease the volume; press the volume up button to increase the volume; press the music pause button to pause music playback, and press it again to resume music playback.

Dormancy function：

When there is no operation for more than 5 minutes when stopped, the system will shut down all the displays and enter dormancy state.Press“ ”button to wake up。

Emergency stop switch function

When the emergency stop switch is turned off at any time, the treadmill will stop running quickly and all data will be cleared to 0. The corresponding window displays "----- ".

All normal operations and operations must be carried out with the emergency stop switch closed.

Motion parameter display and setting range

Speed display range	Time display range	Mileage display range	Calorie display range
0.6-7.6 mile	0:00—99:59	0.00—99.9 mile	0Kcl—999Kcl

Mobile phone Bluetooth music connection operation

Open the Bluetooth search address from “maxfree 00001 to 65000” numbers: for example: search for the number in the address " maxfree 00008" and click on the maxfree 00008 Bluetooth icon

If the next step is paired or the password appears, just enter 0000 and click on the pair.

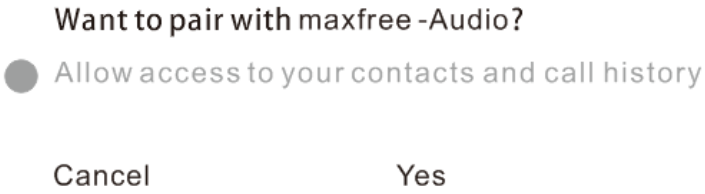

Pairing success

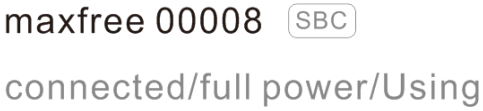

Note: Bluetooth music will be automatically connected next time after the first connection to Bluetooth.

Mobile phone Bluetooth music release operation

Click on the link to find “Unpair”

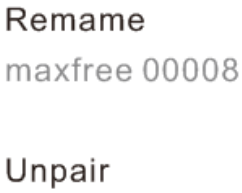

8. Warm-up exercise

Before exercising, it's better to do stretching exercises first. A successful exercise plan must include warm-up, aerobic and relaxation exercises. The number of exercises should be at least two or three times a week. You can take a day off for exercise. After a few months, you can increase the number of exercises to four to five days a week.

Warm-up is an important part of your fitness exercise. Warm-up before every exercise. Moderate warming-up can prepare your body for the next more intense exercise, because warming-up can help muscle warm up and stretch, improve blood circulation and pulse, and send more oxygen into muscle. Repeated warm-up exercise can also reduce muscle soreness after aerobic exercise. We recommend the following warm-up and relaxation exercises.

1. Stretch downward: Bend your knees slightly and bend your body forward slowly. Relax your back and shoulders and touch your toes with both hands. Hold for 10 to 15 seconds, then relax. Repeat three times. Figure 1

Figure 1

2. Stretch your ankles: Sit on a clean cushion and straighten one leg. Put the other leg inward so that it is close to the straight leg. Try to touch your toes with your hands. Keep it for 10 to 15 seconds. Then relax. Repeat each leg three times。
Figure 2

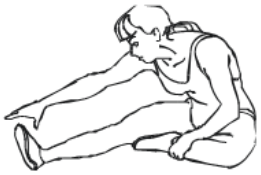

Figure 2

3. Extension of the calf and foot tendons: body forward hands against the wall the left leg arches forward, the right leg is straight, the left leg is on the ground, then bend your left leg and hold it for 10 to 15 seconds, then relax, repeat each leg three times.
Figure 3

Figure 3

4. Head movement: 1-tilt your head to the right and feel the left neck muscle stretch; 2-turn head to the back; turn head to the left; 4-turn your head to front of the chest. then relax and do it three times.
Figure 4

Figure 4

5. Waist movement: stretch your arms to the left and right, then slowly lift it up, over your head. Put your right arm as far as possible to the ceiling.Straighten, hold for 1 second, and feel the stretch of your right muscle. Repeat the same action on the left arm.
Figure 5

Figure 5

9. Maintenance guide

Warning: Be sure to unplug the power plug of the machine before maintaining the product.

- Use cloth to clean product surface.
- Full cleaning will prolong the service life of the machine.
- Clean the dust regularly to keep the parts clean. Clean the exposed parts on both sides of the running belt. This will reduce the accumulation of impurities in the running belt. Keep your sneakers clean. Avoid bringing foreign bodies under your running belt and wearing your running board and belt. The surface of the running belt should be scrubbed with a soapy wet cloth. Please be careful not to splash water on the electrical components and under the running belt.
- Check and lock all parts of the treadmill regularly, replace defective parts and/or leave the equipment idle for repair.

1. Adjusting the Running Belt

Adjust the running belt method

◆ Running with a left bias

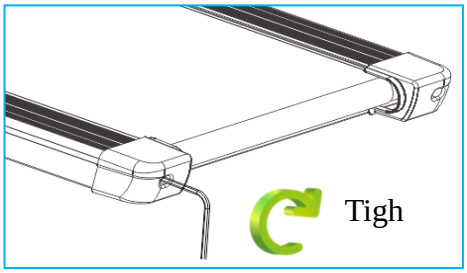

Adjustment method: With the power turned off, take a 5mm hexagon wrench and turn the right rear roller bolt 1/4 turn to the right to tighten the running belt. Then the machine is powered on and the test running belt is centered. Follow this method until the running belt is loosely adjusted to the center.

◆ Running with a right bias

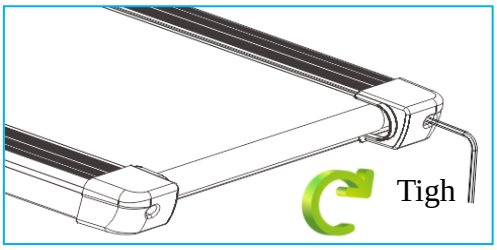

Adjustment method: With the power turned off, take a 5mm hexagon wrench and turn the right rear roller bolt 1/4 turn to the right to tighten the running belt. Then the machine is powered on and the test running belt is centered. Follow this method until the running belt is loosely adjusted to the center.

The running belt will be loose after using it for a period of time. If the running belt is too loose, the running belt will slip during use.

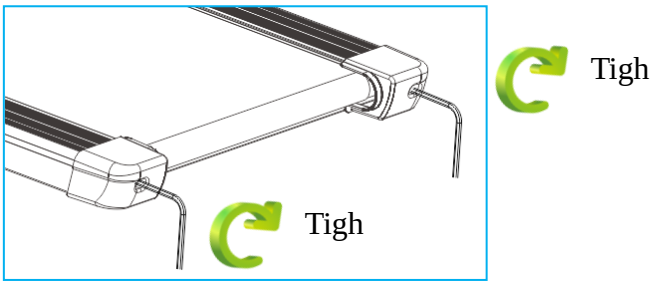

Adjustment method: With the power turned off, take a 5mm hexagonal wrench and turn the left and right bolts of the rear drum 1/4 turn to the right at the same time to tighten the running belt. Then the machine is powered on to test the tightness of the running belt. Follow this method until the tightness of the running belt is moderate.

Note: When you use a treadmill, the pressure on the running belt is not balanced due to the different force exerted by the two feet during running, causing the running belt to deviate from the center. This kind of deviation is normal. When no one is running on the running belt, it will return to the center.

The running belt cannot be adjusted too tight. This will damage the running belt, increase the pressure on the front/rear rollers, cause damage to the roller bearings, etc., cause abnormal noise or other problems.

2. Add lubricating oil to the walking machine

The walking machine is lubricated when it leaves the factory. But it is necessary to check the lubricity of the treadmill frequently, which will help the treadmill to be kept in the best condition. The treadmill must be lubricated after half a year of use or 80 hours of operation.

After every 30 hours or 30 days of use, pull the starting belt from the side and reach out to touch the surface of the treadmill as much as possible. If you feel the silicone oil, you don't need to add lubricating oil; if you touch the surface, there is a strong dry feeling , Please follow the instructions below to add lubricating oil.

Note: Please use special lubricants for treadmills or directly contact our company.

- The refueling position is on the lower surface in the middle of the running belt. (As shown below)
- Cut the mouth of the oil bottle into a small mouth, not too large, and able to inject.
- Raise the running belt so that the oil bottle is extended to the bottom of the running belt and the oil is injected into the middle of the running board. Put down the running belt, press the oil injection part with your hand, and rotate the running belt to spread the oil evenly on the running board.
- After turning on the machine, wait one minute for the oil to be applied evenly, and then use the treadmill.

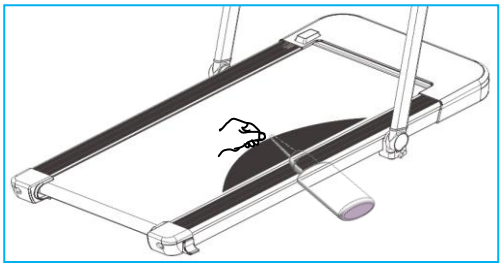

Note: Please turn off the power of the machine before refueling the running belt.

10. Trouble code

Code	Causes	Resolutions
E01	Poor communication between electronic meter and controller	1. Check that the connection between the electronic meter and the controller is not properly connected. 2. The main IC of the controller contacts badly and is re-tightened. 3. Controller power supply abnormal, change controller
E02	Explosion-proof and impact-proof protection	1. If the motor is open or in bad contact, replace the motor or check the connecting terminals. 2. Power tube breakdown, replace it or the controller.
E05	Over current protection	1. Overload. 2. The resistance of the treadmill is too heavy and needs to be lubricated. 3. The motor is damaged, replace it.
E06	Overload protection	
E10	Keyboard and panel control connection communication failure	1. Check if the connection between the electronic watch and the controller is poorly connected. 2. The controller plug is not in good contact and is re-inserted. 3. The controller power supply is abnormal and the controller is replaced.

FCC Statement

This equipment has been tested and found to comply with the limits for a Class B digital device, pursuant to part 15 of the FCC Rules. These limits are designed to provide reasonable protection against harmful interference in a residential installation. This equipment generates, uses and can radiate radio frequency energy and, if not installed and used in accordance with the instructions, may cause harmful interference to radio communications. However, there is no guarantee that interference will not occur in a particular installation. If this equipment does cause harmful interference to radio or television reception, which can be determined by turning the equipment off and on, the user is encouraged to try to correct the interference by one or more of the following measures:

- Reorient or relocate the receiving antenna.
- Increase the separation between the equipment and receiver.
- Connect the equipment into an outlet on a circuit different from that to which the receiver is connected.
- Consult the dealer or an experienced radio/TV technician for help.

Caution: Any changes or modifications to this device not explicitly approved by manufacturer could void your authority to operate this equipment.

This device complies with part 15 of the FCC Rules. Operation is subject to the following two conditions: (1) This device may not cause harmful interference, and (2) this device must accept any interference received, including interference that may cause undesired operation.

RF Exposure Information

The device has been evaluated to meet general RF exposure requirement. The device can be used in portable exposure condition without restriction.