IEEE 802.11 a/b/g/n/ac/ax 2T/2R+ Bluetooth V2.1/4.2/5.2 USB2.0/3.0 Module

Model Number:WXT28M2511

(MediaTek：MT7921AU)

客户认可 Custom Approval Section		
Custom Name		
Department		
Approval		Date：

拟制 DESIGN	审核 CHECK	批准 APPROVAL
张森林	秦楠	高照
2022-09-26	2022-09-26	2022-09-26

惠 州 高 盛 达 科 技 有 限 公 司

HUIZHOU GAOSHENGDA TECHNOLOGY CO.,LTD

广东省惠州市三栋镇惠南科技园金达路 **2** 号

No. 2 Jinda Road, Sandong Town, HUIZHOU, CHINA

TEL：（0752）2096932 E-mail： zhangsl@gaosd.com

Document revision history

Revision	Date	Approved by	Remarks
Version 1.0	2022-09-26		Draft

目录

目录 3
1. General Description 4
2. Features 4
3.Application Diagrams 5
3.1 Functional Block Diagram 5
3.2 General Requirements 5
3.2.1 IEEE 802.11b Section 5
3.2.2 IEEE 802.11g Section 6
3.2.3 IEEE 802.11a Section 6
3.2.4 IEEE 802.11n Section 7
3.2.5 IEEE 802.11ac Section 8
3.2.6 IEEE 802.11ax Section 8
3.2.7 Bluetooth Section 9
4.Electrical and Thermal Characteristics 9
4.1Temperature Limit Ratings 9
4.2General Section 9
4.3 Software 9
4.4 EEPROM Information 10
4.5 DC Characteristics 10
5. Mechanical Dimensions 10
6. Component preparation 12
7. Interface Timing Specification 12
Appendix 1: SMTconnector 13

1. General Description

This document is to specify the product requirements for 802.11a/b/g/n/ac/ax and Bluetooth USB Module.This Card is based on MediaTek MT7921 chipset .It is a complete dual-band(2.4GHz and 5GHz)WIFI 2 ×2 MIMO MAC/PHY/Radio System-on-a-Chip. This module provides a high level of integration with adual-stream IEEE 802.11ax MAC/ base band /radio.The WLAN operation supports 20MHz,40MHz and80MHz channels for data rates up to 1201Mbps. It is also backward complied with IEEE 802.11a standardfrom 5.15~5.825GHz wideband and IEEE 802.11b/g standard from 2.4~2.5GHz. It can be used to provideup to 54Mbps for IEEE 802.11a and IEEE 802.11g, 11Mbps for IEEE 802.11b and 300Mbps for IEEE802.11n. The Bluetooth part supports latest 5.2 .

With seamless roaming, fully interoperability and advanced security with WEP standard, 802.11 a/b/g/n/ac USB2.0 Module offers absolute interoperability with different vendors 802.11a/b/g/n/ac. Access Points through the wireless LAN.

2. Features

- Compatible with IEEE 802.11a standard to provide wireless 54Mbps data rate
- Compatible with IEEE 802.11b standard to provide wireless 11Mbps data rate
- Compatible with IEEE 802.11g standard to provide wireless 54Mbps data rate
- Compatible with IEEE 802.11n standard to provide wireless 300Mbps data rate
- Compatible with IEEE 802.11ac standard to provide wireless 866.7Mbps date rate.
- Compatible with IEEE 802.11ax standard to provide wireless 1201Mbps data rate.
- Operation at 2.4~2.5GHz and 5.15~5.825GHz frequency band to meet worldwide regulations.
- Support MU-MIMO RX .
- Bluetooth specification 2.1+EDR
- Bluetooth 5.2 Low Energy (LE)
- IEEE 802.11 d/e/h/i/j/k/mc/r/v/w support
- Security support for WFA WPA/WPA2/WPA3 personal, WPS2.0, WAPI
- Drivers support Win10,Win8,Win7,XP,Linux
- High speed USB 2.0 interface
- High speed USB 3.0 interface
- HSF compliant

3. Application Diagrams

3.1 Functional Block Diagram

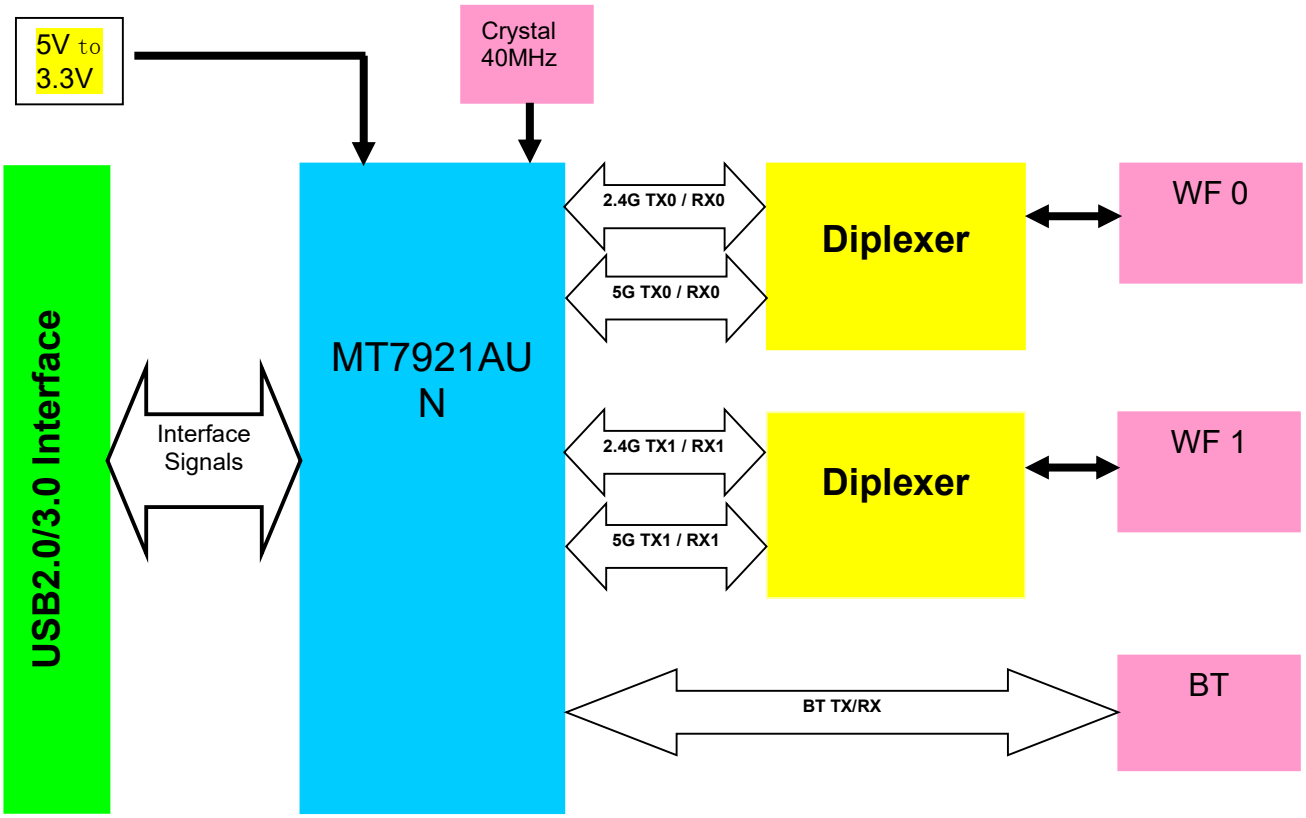

3.2 General Requirements

3.2.1 IEEE 802.11b Section

	Feature	Detailed Description
3.2.1.1	Standard	• IEEE 802.11b
3.2.1.2	Radio and Modulation Schemes	• DQPSK , DBPSK and CCK with DSSS
3.2.1.3	Operating Frequency	• 2400 ～ 2483.5MHz ISM band
3.2.1.4	Channel Numbers	• 13 channels for Worldwide
3.2.1.5	Data Rate	• at most 11Mbps
3.2.1.6	Media Access Protocol	• CSMA/CA with ACK
3.2.1.7	Transmitter Output Power at Antenna Connector	• Typical RF Output Power at each RF chain,and at room Temp. 25℃ • 14±2 dBm at 11Mbps
3.2.1.8	Receiver Sensitivity at Antenna Connector	• Typical Sensitivity at each RF chain. @Frame (1000-byte PDUs) Error Rate<8% at room Temp 25℃ • -83 dBm for 11Mbps

3.2.2 IEEE 802.11g Section

	Feature	Detailed Description
3.2.2.1	Standard	● IEEE 802.11g
3.2.2.2	Radio and Modulation Type	● QPSK , BPSK , 16QAM ,64QAM with OFDM
3.2.2.3	Operating Frequency	● 2400 ～ 2483.5MHz ISM band
3.2.2.4	Channel Numbers	● 13 channels for Worldwide
3.2.2.5	Data Rate	● at most 54Mbps
3.2.2.6	Media Access Protocol	● CSMA/CA with ACK
3.2.2.7	Transmitter Output Power at Antenna Connector	● Typical RF Output Power at each RF chain, at room Temp. 25℃ ● 14±2 dBm at 54Mbps
3.2.2.8	Receiver Sensitivity at Antenna Connector	● Typical Sensitivity at each RF chain. @Frame (1000-byte PDUs) Error Rate<10% at room Temp 25℃ ● -71 dBm for 54Mbps

3.2.3 IEEE 802.11a Section

	Feature	Detailed Description
3.2.3.1	Standard	● IEEE 802.11a
3.2.3.2	Radio and Modulation Type	● QPSK , BPSK , 16QAM ,64QAM with OFDM
3.2.3.3	Operating Frequency	● 5.15~5.25GHz ● 5.25~5.35GHz ● 5.47~5.725GHz ● 5.725~5.825GHz
3.2.3.4	Data Rate	● at most 54Mbps
3.2.3.5	Media Access Protocol	● CSMA/CA with ACK
3.2.3.6	Transmitter Output Power at Antenna Connector	● Typical RF Output Power at each RF chain, at room Temp. 25℃ ● 14±2 dBm at 54Mbps
3.2.3.7	Receiver Sensitivity at Antenna Connector	● Typical Sensitivity at each RF chain. @Frame (1000-byte PDUs) Error Rate<10% at room Temp 25℃ ● -71 dBm for 54Mbps

3.2.4 IEEE 802.11n Section

	Feature	Detailed Description	
3.2.4.1	Standard	● IEEE 802.11n	
3.2.4.2	Radio and Modulation Type	● BPSK , QPSK , 16QAM ,64QAM with OFDM	
3.2.4.3	Operating Frequency	● 2.4GHz :2400 ~ 2483.5MHz for ISM band 5GHz : 5.15~5.25GHz；5.25~5.35GHz； 5.47~5.725GHz；5.725~5.825GHz；	
3.2.4.4	Data Rate	at most 300 Mbps	
3.2.4.5	Media Access Protocol	● CSMA/CA with ACK	
3.2.4.6	Transmitter Output Power at Antenna Connector	● Typical RF Output Power at each RF chain,and at roomTemp. 25℃	
		● 2.4GHz Band/HT20 14±2dBm at MCS7	● 2.4GHz Band/HT40 14±2dBm at MCS7
		● 5GHz Band/HT20 14±2dBm at MCS7	● 5GHz Band/HT40 14±2dBm at MCS7
3.2.4.7	Receiver Sensitivity at Antenna Connector	Typical Sensitivity at each RF chain. @Frame(1000-byte PDUs)Error Rate=10% and at room Temp. 25℃	
		2.4GHz Band/HT20 ●-68dBm at MCS7	2.4GHz Band/HT40 ● -66dBm at MCS7
		5GHz Band/HT20 ● -68dBmat MCS7	5GHz Band/HT40 ● -66dBm at MCS7

3.2.5 IEEE 802.11ac Section

	Feature	Detailed Description
3.2.5.1	Standard	● IEEE 802.11ac
3.2.5.2	Radio and Modulation Type	● QPSK , BPSK , 16QAM ,64QAM,256QAM with OFDM
3.2.5.3	Operating Frequency	● 5GHz : 5.15~5.25GHz； 5.25~5.35GHz； 5.47~5.725GHz；5.725~5.825GHz；
3.2.5.4	Data Rate	● at most 866.7 Mbps
3.2.5.5	Media Access Protocol	● CSMA/CA with ACK
3.2.5.6	Transmitter Output Power at Antenna Connector	● Typical RF Output Power at each RF chain, at room Temp. 25℃ ● 13±2dBm HT80 at MCS9
3.2.5.7	Receiver Sensitivity at Antenna Connector	Typical Sensitivity at each RF chain. @Frame(1000-byte PDUs)Error Rate<10% at room Temp 25℃ 5GHz Band / HT20 ● -64dBm at MCS8 | 5GHz Band / HT40 ● -58dBm at MCS9 5GHz Band / HT80 ● -55dBm at MCS9

3.2.6 IEEE 802.11ax Section

	Feature	Detailed Description
3.2.6.1	Standard	● IEEE 802.11ax
3.2.6.2	Radio and Modulation Type	● QPSK , BPSK , 16QAM ,64QAM,256QAM, 1024QAM
3.2.6.3	Operating Frequency	● 2G: 2400 ～ 2483.5MHz ISM band ● 5GHz : 5.15~5.25GHz； 5.25~5.35GHz； 5.47~5.725GHz；5.725~5.825GHz；
3.2.6.4	Data Rate	● at most 1201 Mbps
3.2.6.5	Media Access Protocol	● CSMA/CA with ACK
3.2.6.6	Transmitter Output Power at Antenna Connector	● Typical RF Output Power at each RF chain, at room Temp. 25℃ ● 11±2dBm HT80 at MCS11
3.2.6.7	Receiver Sensitivity at Antenna Connector	Typical Sensitivity at each RF chain. @Frame(1000-byte PDUs)Error Rate<10% at room Temp 25℃ 2GHz Band / HT20 ● -57dBm at MCS11 | 2GHz Band / HT40 ● -55dBm at MCS11 5GHz Band / HT20 ● -57dBm at MCS11 | 5GHz Band / HT40 ● -55dBm at MCS11 5GHz Band / HT80 ● -53dBm at MCS11

3.2.7 Bluetooth Section

Feather	**Description**		
General specification			
Bluetooth standard	Bluetooth V2.1/3.0/4.2/5.2		
Frequency band	2402MHz-2480MHz		
Channel Numbers	79 channels for BDR+EDR 40 channels for BLE		
Modulation	GFSK, π/4-DQPSK and 8DPSK		
RF specification			
	Min（dBm）	Type（dBm）	Max（dBm）
BDR Output Power		7	
BLE Output Power		5	
Sensitive @BER=0.1% FOR GFSK(1Mbps)		-86	
Sensitive @BER=0.01% FOR π/4-DQPSK(2Mbps)		-86	
Sensitive @BER=0.01% FOR 8DPSK(3Mbps)		-80	
Maximum input level	GFSK(1Mbps) -20dBm		
	π/4-DQPSK(2Mbps) -20dBm		
	8DQPSK(3Mbps) -20dBm		
Sensitive @PER=30.8% FOR BLE		-90	

4. Electrical and Thermal Characteristics

4.1 Temperature Limit Ratings

Parameter	**Minimum**	**Maximum**	**Units**
Storage Temperature	-40	+80	C
Ambient Operating Temperature	0	70	C
Junction Temperature	0	125	C

4.2 General Section

	Feature	**Detailed Description**
4.2.1	Antenna Type	• WIFI&BT: PCB Antenna
4.2.2	Operating Voltage	• 5V±10%
4.2.3	Current Consumption	• ＜300mA@RX • ＜2000mA@TX
4.2.4	Form Factor and Interface	• High Speed USB3.0/USB2.0 Interface

4.3 Software

Driver	Win10,Win8,Win7, XP, Linux, MAC
Security	64/128-bits WEP, WPA, WPA2

4.4 EEPROM Information

BT

Vendor ID	0E8D
Product ID	7961

WiFi

Reg Domain	Worldwide 2.4G/5G Read from registry；Control by driver
	——
Vendor ID	0E8D
Product ID	7961

4.5 DC Characteristics

Symbol	Parameter	Min	TYPE	Max	Unit
V_{IL}	Input Low Voltage	-0.3		VDD3.3*0.25	V
V_{IH}	Input High Voltage	VDD3.3*0.625		VDD3.3+0.3	V
V_{OL}	Output Low Voltage	-0.3		0.4	V
V_{OH}	Output High Voltage	VDD3.3-0.4		VDD3.3+0.3	V

5. Mechanical Dimensions

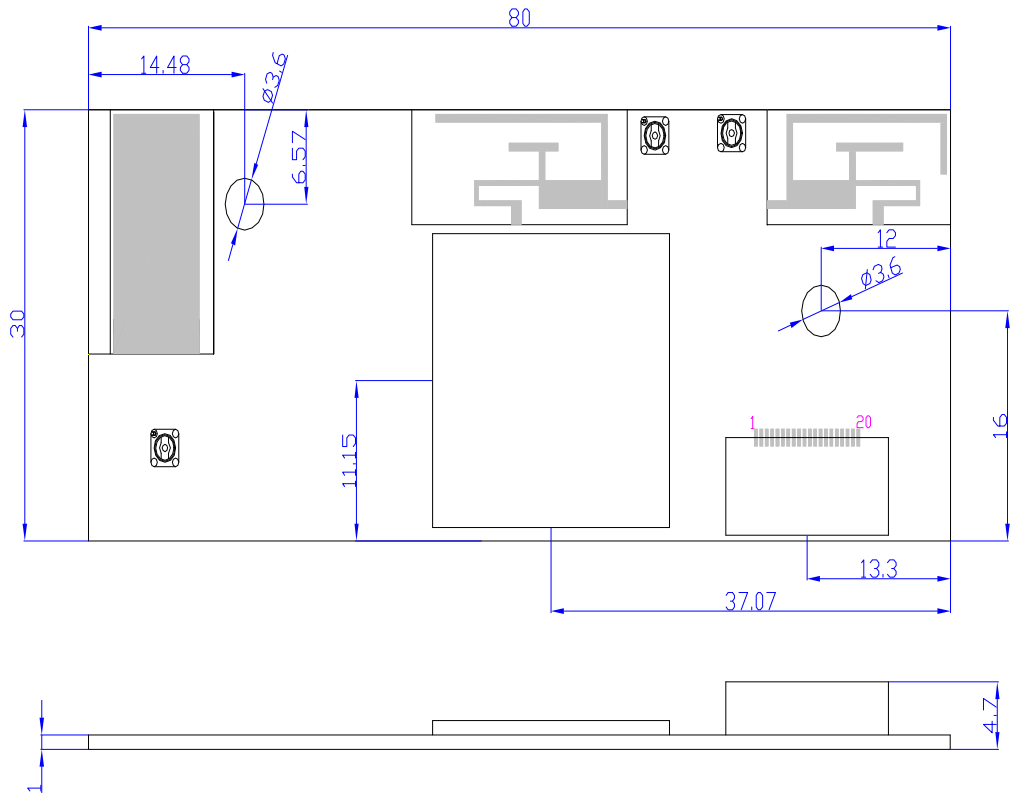

Pin	Symbol	DESCRIPTION	I/O
1	GND	GND	-
2	GND	GND	-
3	GND	GND	-
4	USB3_TX-	USB3.0	O
5	USB3_TX+	USB3.0	O
6	GND	GND	-
7	USB3_RX-	USB3.0	I
8	USB3_RX+	USB3.0	I
9	GND	GND	-
10	GND	GND	-
11	D+	USB Communication signal USB-DP）	I/O
12	D-	USB Communication signal USB-DM	I/O
13	GND	GND	-
14	GPIO1	BT/WIFI wake up host	O
15	RESET	Reset controlled by main SOC	I
16	5V	Power supply	-
17	5V	Power supply	-
18	5V	Power supply	-
19	5V	Power supply	-
20	5V	Power supply	-

Dimensional error range:

Length(mm)	Error(mm)
0-5	±0.15
5-10	±0.20
10-50	±0.30
>50	±0.40

The module complies with FCC Part 15C requirements.

FCC Statement

This device complies with part 15 of the FCC Rules. Operation is subject to the following two conditions: (1) This device may not cause harmful interference, and
(2) This device must accept any interference received, including interference that may cause undesired operation.
Any Changes or modifications not expressly approved by the party responsible for compliance could void the user's authority to operate the equipment.

RF warning:
This equipment complies with FCC radiation exposure limits set forth for an uncontrolled environment. This equipment should be installed and operated with minimum distance 20cm between the radiator & your body.

Transmitter Module Approval Conditions:
1. Antennas must be installed to provide 20 cm separation distance from the transmitting antenna to the body of the user during normal operating condition. This device must not be co-located or operating in conjunction with any other antenna or transmitter.
2. Only those antennas filed under FCC ID: 2A3LP-WXT28M2511 can be used with this device.
3. When the module is installed in the final system where the antenna location is less than 20 cm separation distance to the body of user, additional equipment authorization must be applied.
4. FCC ID label on the final system must be labeled with "Contains FCC ID: 2A3LP-WXT28M2511" or "Contains transmitter module FCC ID: 2A3LP-WXT28M2511".
5. In the user guide, final system integrator must be ensure that there is no instruction provided in the user guide to install or remove the transmitter module.
6. The transmitter module must be installed and used in strict accordance with the manufacturer's instructions as described in the user documentation that comes with the product. This device complies with the following radio frequency and safety standards.

The host product manufacturer is responsible for compliance to any other FCC rules that apply to the host not covered by the modular transmitter grant of certification. The final host product still requires Part 15 Subpart B compliance testing with the modular transmitter installed.
The end user manual shall include all required regulatory information/warning as shown in this manual, include:
This product must be installed and operated with a minimum distance of 20 cm between the radiator and user body.

Canada Statement

This device complies with Industry Canada's licence-exempt RSSs. Operation is subject to the following two conditions:
(1) This device may not cause interference; and
(2) This device must accept any interference, including interference that may cause undesired operation of the device.
Le présent appareil est conforme aux CNR d'Industrie Canada applicables aux appareils radio exempts de licence. L' exploitation est autorisée aux deux conditions suivantes:
(1) 1’ appareil ne doit pas produire de brouillage;
(2) 1' utilisateur de 1' appareil doit accepter tout brouillage radioélectrique subi, mêmesi le brouillage est susceptible d’ en compromettre le fonctionnement.
Please notice that if the ISED certification number is not visible when the module is installed inside another device, then the outside of the device into which the module is installed must also display a label referring to the enclosed module. This exterior label can use wording such as the following: "Contains IC: 27906-WXT28M2511" any similar wording that expresses the same meaning may be used. l'appareil hôte doit porter une étiquette donnant le numéro de certification du module.
d' Industrie Canada, précédé des mots « Contient un module d' émission », du mot « IC: 27906-WXT28M2511 » ou d'une formulation similaire exprimant le même sens, comme suit
The device for operation in the band 5150-5250 MHz is only for indoor use to reduce thepotential for harmful interference to co-channel mobile satellite systems.
Les dispositifs fonctionnant dans la bande 5150-5250 MHz sont réservés uniquement pour une utilisation à 1’ intérieur afin de réduire les risques de brouillage préjudiciable aux systèmes de satellites mobiles utilisant les mêmes canaux.
The device meets the exemption from the routine evaluation limits in section 2.5 of RSS 102 and compliance with RSS-102 RF exposure, users can obtain Canadian information on RF exposure and compliance.
Le dispositif rencontre l'exemption des limites courantes d' évaluation dans la section 2.5 de RSS 102 etla conformité à l’exposition de RSS-102 RF, utilisateurs peut obtenir l' information canadienne surl'exposition et la conformité de rf.
This transmitter must not be co-located or operating in conjunction with any other antenna or transmitter. This equipment should be installed and operated with a minimum distance of 20 centimeters between the radiator and your body.
Cet émetteur ne doit pas être Co-placé ou ne fonctionnant en même temps qu' aucune autre antenne ouémetteur. Cet équipement devrait être installé et actionné avec une distance minimum de 20 centimètres entre le radiateur et votre corps.