Lepro

Smart Spot Camera

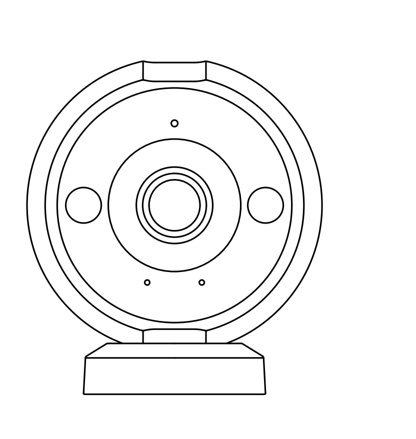

M2

EN (Instructions & Safety Information)

1. Keep the device away from water, fire, humidity, or hot environments.
2. Do not use a damaged charger or USB cable to charge the device.
3. Use only the power supplies provided by the manufacturer and found in the original packaging of this product. If you have any questions, please do not hesitate to contact us.
4. Do not disassemble, repair, or modify the product.
5. Do not use the product if the casing has been broken. Danger of electric shock.
6. Never touch the product with wet hands.
7. Do not use liquid to clean the product. Use only a dry cloth.
8. Never insert metal objects into the product. If a metal object enters the product, turn off the circuit breaker and contact an authorized electrician.
9. Do not use this product in healthcare facilities. Hospitals or healthcare facilities may be using equipment that could be sensitive to external RF energy.
10. When leaving the product unused for an extended period, unplug it from the power outlet.
11. Operating Temperature: 0°C ~ 40°C (32°F ~ 104°F). Please read and adhere to the above safety information when operating the device. We cannot guarantee that no accidents or damage will occur due to improper use of the device. Please use this product with care and operate it at your own risk.
12. This product is subject to the provisions of European Directive 2012/19/EC. The symbol showing a wheelie bin crossed through indicates that the product requires separate refuse collection in the European Union. This applies to the product and all accessories marked with this symbol. Products identified with this symbol may not be discarded with normal household waste, but must be taken to a collection point for recycling electric and electronic appliances. This recycling symbol marks e.g. an object or parts of the material as valuable for recycling. Recycling helps to reduce the consumption of raw materials and protect the environment.

12

DE (Anleitung und Sicherheitsinformationen)

1. Halten Sie das Gerät von Wasser, Feuer, Feuchtigkeit oder heißen Umgebungen fern.
2. Verwenden Sie zum Aufladen des Geräts kein beschädigtes Ladegerät oder USB-Kabel.
3. Verwenden Sie ausschließlich das vom Hersteller bereitgestellte und in der Originalverpackung dieses Produkts enthaltenes Netzteil. Bei Fragen können Sie sich gerne an uns wenden.

SKUs*: M2-EU M2-UK

https://www.lepro.com/docs/

Smart Lighting Holding Limited claims SKUs* meet the Radio Act 2014/53/EU. A complete Declaration of Conformity can be downloaded with this link:

Die Ansprüche der Smart Lighting Holding Limited SKUs* erfüllen das Radio Act 2014/53 / EU. Eine vollständige Konformitätserklärung kann unter folgendem Link heruntergeladen werden:

Smart Lighting Holding Limited affirme que SKUs* est conforme à la loi sur la radio 2014/53 / EU. Une Déclaration de Conformité complète peut être téléchargée avec ce lien:

Smart Lighting Holding Limited afirma que SKUs* cumple con la Radio Act 2014/53 / EU. Puede descargar la Declaración de conformidad completa:

Smart Lighting Holding Limited dichiara SKUs* incontra la Radio Act 2014/53/EU. Una dichiarazione di conformità completa può essere scaricato a questo link:

Smart Lighting Holding Limited beweert dat SKU's* voldoen aan de Radiowet 2014/53/EU. Een volledige conformiteitsverklaring kan via deze link worden gedownload:

Firma Smart Lighting Holding Limited twierdzi, że jednostki SKU* są zgodne z ustawą radiową 2014/53/UE. Pełną deklarację zgodności można pobrać za pomocą tego linku:

Smart Lighting Holding Limited hävdar att SKU:er* uppfyller Radio Act 2014/53/EU. En fullständig försäkran om överensstämmelse kan laddas ner med denna länk:

Smart Lighting Holding Limited, SKU'ların* 2014/53/EU Radyo Yasasına uygun olduğunu iddia ediyor. Eksiksiz bir Uygunluk Beyanı bu bağlantıdan indirilebilir:

FCC Warning

This device complies with part 15 of the FCC Rules. Operation is subject to the following two conditions: (1) This device may not cause harmful interference, and (2) this device must accept any interference received, including interference that may cause undesired operation.

Any changes or modifications not expressly approved by the party responsible for compliance could void the user's authority to operate the equipment.

This equipment has been tested and found to comply with the limits for a Class B digital device, pursuant to part 15 of the FCC Rules. These limits are designed to provide reasonable protection against harmful interference in a residential installation. This equipment generates, uses and can radiate radio frequency energy and, if not installed and used in accordance with the instructions, may cause harmful interference to radio communications. However, there is no guarantee that interference will not occur in a particular installation. If this equipment does cause harmful interference to radio or television reception, which can be determined by turning the equipment off and on, the user is encouraged to try to correct the interference by one or more of the following measures:

—Reorient or relocate the receiving antenna.
—Increase the separation between the equipment and receiver.
—Connect the equipment into an outlet on a circuit different from that to which the receiver is connected.
—Consult the dealer or an experienced radio/TV technician for help.

FCC Radiation Exposure Statement:

This equipment complies with FCC radiation exposure limits set forth for an uncontrolled environment . This transmitter must not be co - located or operating in conjunction with any other antenna or transmitter.

This equipment should be installed and operated with minimum distance 20cm between the radiator& your body.

ISEDC Warning

This device complies with Innovation, Science and Economic Development Canada licence-exempt RSS standard (s). Operation is subject to the following two conditions: (1) this device may not cause interference, and (2) this device must accept any interference,including interference that may cause undesired operation of the device. Any changes or modifications not expressly approved by the party responsible for compliance could void the user's authority to operate the equipment.

Cet appareil est conforme à la (aux) norme(s) RSS exemptée(s) de licence du ministère de l'Innovation, des Sciences et du Développement économique du Canada. Son fonctionnement est soumis aux deux conditions suivantes : (1) cet appareil ne doit pas causer d'interférences, et (2) cet appareil doit accepter toute interférence, y compris les interférences susceptibles d'entraîner un fonctionnement indésirable de l'appareil. Tous les changements ou modifications non expressément approuvée par le responsible de la conformité pourrait annuler l'autorité de l'utilisateur à faire fonctionner l'équipement.

ISEDC Radiation Exposure Statement:

This equipment complies with ISEDC RF radiation exposure limits set forth for an uncontrolled environment. This transmitter must not be co-located or operating in conjunction with any other antenna or transmitter. This equipment should be installed and operated with minimum distance 20cm between the radiator& your body.

Déclaration d'exposition aux radiations de l'ISEDC:

Cet équipement est conforme aux limites d'exposition aux rayonnements RF fixées par l'ISEDC pour un environnement non contrôlé. Cet émetteur ne doit pas être situé ou fonctionner en conjonction avec une autre antenne ou un autre émetteur. La distance entre le radiateur et votre corps doit être d'au moins 20 cm lors de l'installation et du fonctionnement de cet appareil.

Only AUSTRALIA and NEW ZEALAND LIMITED WARRANTY

This warranty covers defects in materials and workmanship of products manufactured, sold by Lepro which were purchased and used in Australia or New Zealand.The warranty lasts for one year from the date of purchase of the product. This warranty extends to you if you are the end-user purchaser with the original purchase receipt.The benefits provided under this Limited Warranty are in addition to other rights and remedies provided under Australian and New Zealand law.

Our goods come with guarantees that cannot be excluded under the Australian Consumer Law.You are entitled to a replacement or refund for a major failure and compensation for any other reasonably foreseeable loss or damage. You are also entitled to have the goods repaired or replaced if the goods fail to be of acceptable quality and the failure does not amount to a major failure.The Lepro Limited warranty lapses if: • Anything has been changed, crossed out, deleted or rendered illegible on the purchase docket or product description. • The failure is caused by damage, faulty connections or abuse. • A defect is caused by extreme circumstances not inherent to the product, for example, lighting, flooding, fire, incorrect use or negligence. • The product has been opened or disassembled.

During the Limited Warranty period Lepro will repair or replace, at its option, products that manifest defects in material or workmanship. To request warranty service within Australia and New Zealand, We recommend contacting us via email or the App first, and then return the product to the reseller from which you purchased it.You will be responsible for shipping charges, insurance, and other transportation-related expenses incurred in claiming the warranty from Lepro.If you return out-of- warranty products or products under warranty that are determined not to conform to this warranty, you will be responsible for all return-shipping and other transportation-related expenses.You may contact Lepro with the information below:Business Name: LE Innovation Limited
Business Address: One Spencer Dock, North Wall Quay, Dublin 1, D01 X9R7, Ireland.
Phone Number: +1 866-287-2558, Email Address: cs@lepro.com

LEPRO INNOVATION INC
3651 Lindell Road Suite D1048, Las Vegas, NV 89103, USA
www.lepro.com +1 866-287-2558 cs@lepro.com

Le Ming Trading Inc.
801-6081 No. 3 Rd. Richmond, BC, V6Y 2B2, CA
www.lepro.ca +1 833-433-1453 cs@lepro.ca

Manufacturer / Hersteller: **LE Innovation Limited**
One Spencer Dock, North Wall Quay, Dublin 1, D01 X9R7, Ireland
www.lepro.de +49 800-723-6202 cs@lepro.de

UK Importer: **Lighting EVER Ltd.**
93 Addy House, Rotherhithe New Road, London, SE16 2PD, United Kingdom www.lepro.co.uk
+44 800-802-1244 cs@lepro.co.uk

Made in China Fabriqué en Chine Hergestellt in China

PAP 20

FR ÉTUI + SACS EN PLASTIQUE → BAC DE TRI

Field of View:	120° FOV
Video Definition:	2K
Audio:	Two-Way (built-in microphone and Speaker)
Night Vision:	850 nm IR LED | Full-Color Night Vision
Wireless Protocols:	IEEE 802.11b/g/n/ax, 2.4GHz
Adapter Input:	100-240V~ 50/60Hz
Adapter Output:	5.0 V⎓1.0 A
Storage Options:	Supports video storage on Micro SD cards up to 256GB or in the cloud

FCC ID: 2A3MAM2 **IC:** 27538-M2 **HVIN:** M2
CAN ICES-003 (B) / NMB-003 (B)

Micro SD card not included.
Micro-SD-Karte nicht enthalten.
Carte Micro SD non incluse.
Tarjeta Micro SD no incluida.
Scheda Micro SD non inclusa.
Micro SD-kaart niet inbegrepen.
Micro SD-kort ej inkluderat.
Karta Micro SD nie jest dołączona.
Micro SD kart dahil değil.

App Connection

1

Lepro

Download on the App Store
Get it on Google Play

Android 7.0+ iOS 13.0+
WiFi 2.4 Ghz

2

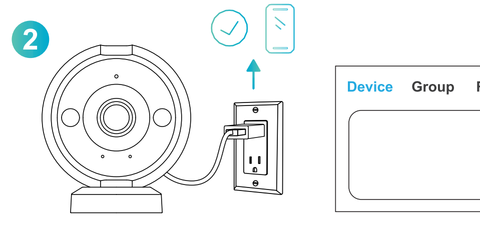

Follow the on-screen steps to finish set up.
Die Schritte auf dem Bildschirm befolgen, um es einzurichten.
Suivez les étapes à l'écran pour terminer la configuration.
Siga los pasos en pantalla para finalizar la configuración.
Seguire i passaggi sullo schermo per completare l'impostazione.
Volg de stappen op het scherm om het instellen te voltooien.
Följ anvisningarna på skärmen för att slutföra installationen.
Postępuj zgodnie z krokami wyświetlanymi na ekranie, aby zakończyć konfigurację.
Kurulumu tamamlamak için ekrandaki adımları izleyin.

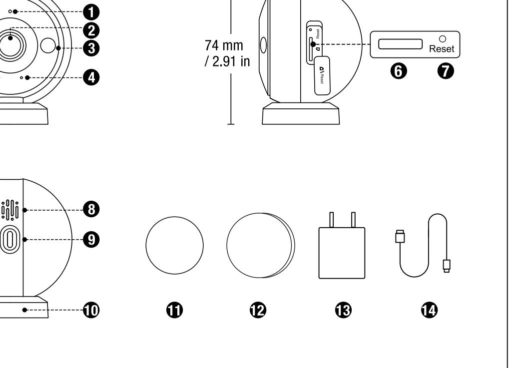

EN
1. Indicator Light
2. Camera
3. White LED / Infrared Light
4. Mic
5. Waterproof Air Vents
6. MicroSD Card Slot
7. Reset Button
8. Speaker
9. Charging Port
10. Magnetic Base
11. Double-Sided Tape
12. Metal Plate
13. DC Power Adapter
14. Charging Cable

DE
1. Kontrollleuchte
2. Kamera
3. LED-Weißlicht / Infrarotlicht
4. Mikrofon
5. Wasserdichte Entlüftungsbohrung
6. MicroSD-Steckplatz
7. Reset-Taste
8. Lautsprecher
9. Ladeanschluss
10. Magnetfuß
11. Doppelseitiges Klebeband
12. Metallplatte
13. Netzteil
14. Ladekabel

FR
1. Voyant Lumineux
2. Caméra
3. LED Blanche / Lumière Infrarouge
4. Microphone
5. Grilles de Ventilation Etanches
6. Fente pour carte MicroSD
7. Bouton de réinitialisation
8. Haut-parleur
9. Port de charge
10. Base Magnétique
11. Ruban Adhésif Double Face
12. Plaque Métallique
13. Adaptateur d'alimentation
14. Câble de chargement

ES
1. Indicador Luminoso
2. Cámara
3. LED Blanco / Luz Infrarroja
4. Micrófono
5. Rejillas de Ventilación Impermeables
6. Ranura para tarjeta MicroSD
7. Botón de Reinicio
8. Altavoz
9. Puerto de carga
10. Base Magnética
11. Cinta de Doble Cara
12. Placa Metálica
13. Adaptador de Corriente
14. Cable de carga

IT
1. Indicatore Luminoso
2. Fotocamera
3. LED Bianco/Luce a Infrarossi
4. Microfono
5. Griglie di Ventilazione Impermeabili
6. Slot per scheda MicroSD
7. Pulsante di Ripristino
8. Altoparlante
9. Porta di Ricarica
10. Base Magnetica
11. Nastro Biadesivo
12. Piastra Metallica
13. Adattatore di Alimentazione
14. Cavo di Ricarica

NL
1. Indicator Light
2. Camera
3. Witte LED / Infrarood licht
4. Microfoon
5. Waterdichte Luchtroosters
6. MicroSD-kaartsleuf
7. Resetknop
8. Luidspreker
9. Oplaadpoort
10. Magnetische Basis
11. Dubbelzijdig Tape
12. Metalen Plaat
13. DC-voedingsadapter
14. Oplaadkabel

SV
1. Indikeringslampa
2. Kamera
3. Vit LED / Infrarött Ljus
4. Mikrofon
5. Vattentäta Luftventiler
6. MicroSD-kortplats
7. Återställningsknapp
8. Högtalare
9. Laddningsport
10. Magnetisk Bas
11. Dubbelsidig Tejp
12. Metallplåt
13. DC-strömadapter
14. Laddningskabel

PL
1. Dioda sygnalizacyjna
2. Kamera
3. Biała dioda LED / Światło podczerwone
4. Mikrofon
5. Wodoodporne kratki powietrzne
6. Slot na kartę MicroSD
7. Przycisk reset
8. Głośnik
9. Port ładowania
10. Magnetyczna Baza
11. Taśma dwustronna
12. Blacha metalowa
13. Zasilacz DC
14. Kabel ładowania

TR
1. Gösterge Lambası
2. Kamera
3. Beyaz LED / Kızılötesi Işık
4. Mikrofon
5. Su Geçirmez Hava Menfezleri
6. MicroSD Kart Yuvası
7. Sıfırlama Düğmesi
8. Hoparlör
9. Şarj portu
10. Manyetik Taban
11. İkili Yüzlü Bant
12. Metal Levha
13. DC Güç Adaptörü
14. Şarj kablosu

3 Installation Modes

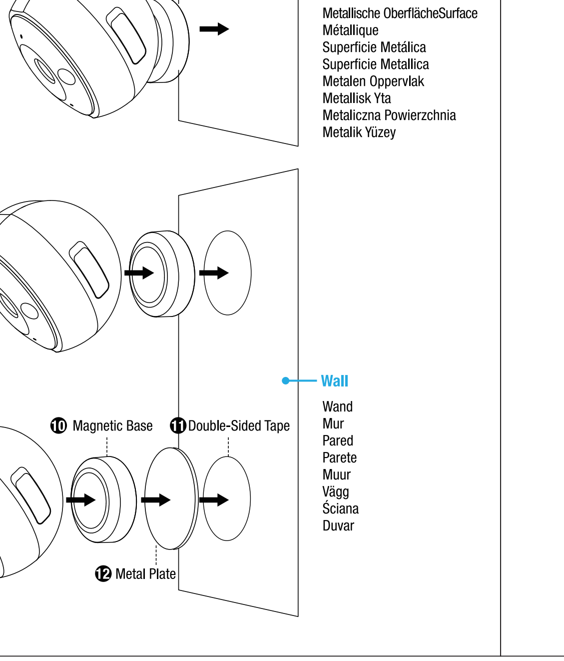

How to reset the camera

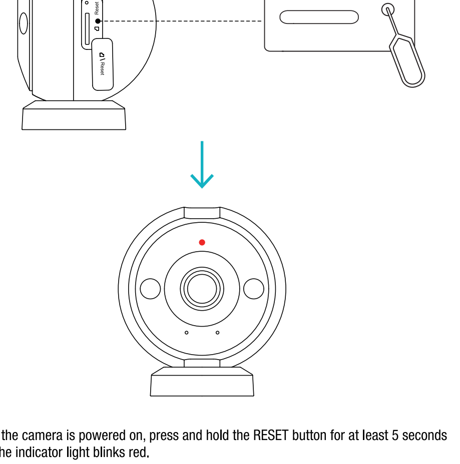

EN:
While the camera is powered on, press and hold the RESET button for at least 5 seconds until the indicator light blinks red.

- Blinking red quickly → Camera updating or camera resetting
- Blinking red and blue → Ready for setup
- Blinking blue quickly → Connecting to Wi-Fi
- Blinking red slowly → Connected to Wi-Fi
- Solid blue → Connected to the cloud

DE:
Halten Sie bei eingeschalteter Kamera die RESET-Taste mindestens 5 Sekunden lang gedrückt, bis die Kontrollleuchte rot blinkt

- Schnelles rotes Blinken → Update oder Reset der Kamera
- Rot-Blaues Blinken → Bereit zur Einrichtung
- Schnelles blaues Blinken → Verbindung mit WLAN wird hergestellt
- Langsames rotes Blinken → Mit WLAN verbunden
- Dauerhaft blau → Mit der Cloud verbunden

FR:
Lorsque la caméra est allumée, appuyez sur le bouton RESET et maintenez-le enfoncé pendant au moins 5 secondes jusqu'à ce que la LED clignote en rouge.

- Clignotement rouge rapide → Mise à jour ou réinitialisation de la caméra
- Clignotement rouge et bleu → Prêt pour la configuration
- Clignotement bleu rapide → Connexion au réseau WLAN en cours d'établissement
- Clignotement rouge lent → Connecté au WLAN
- Bleu fixe → Connecté au cloud

ES:
Con la cámara encendida, mantenga pulsado el botón RESET durante al menos 5 segundos hasta que el indicador luminoso parpadee en rojo.

- Parpadeo rápido en rojo → Actualización de la cámara o reinicio de la cámara
- Parpadeo en rojo y azul → Listo para la instalación
- Parpadeo rápido en azul → Se está estableciendo la conexión a la red Wi-Fi
- Parpadea en rojo lentamente → Conectado a Wi-Fi
- Azul sólido → Conectado a la nube

IT:
Con la fotocamera accesa, tenere premuto il pulsante RESET per almeno 5 secondi finché la spia non lampeggia in rosso.

- Rosso lampeggiante rapidamente → Aggiornamento o reimpostazione della fotocamera
- Rosso e blu lampeggianti → Pronto per la configurazione
- Blu lampeggiante rapidamente → Connessione al Wi-Fi
- Rosso lampeggiante lentamente → Connesso al Wi-Fi
- Blu fisso → Connesso al cloud

NL:
Terwijl de camera is ingeschakeld, druk en houd de RESET-knop minstens 5 seconden ingedrukt totdat het indicatielampje rood knippert.

- Knipperend rood snel → Camera wordt bijgewerkt of camera wordt gereset
- Knipperend rood en blauw → Klaar voor installatie
- Knipperend blauw snel → Verbinding maken met Wi-Fi
- Langzaam knipperend rood → Verbonden met Wi-Fi
- Effen blauw → Verbonden met de cloud

SV:
Medan kameran är påslagen, tryck och håll ned ÅTERSTÄLL-knappen i minst 5 sekunder tills indikatorlampan blinkar rött.

- Snabbt blinkande rött → Kamera uppdaterar eller kamera återställer
- Blinkande rött och blått → Klar för inställning
- Snabbt blinkande blått → Ansluter till Wi-Fi
- Sakta blinkande rött → Ansluten till Wi-Fi
- Solid blått → Ansluten till molnet

PL:
Gdy kamera jest włączona, naciśnij i przytrzymaj przycisk RESET przez co najmniej 5 sekund, aż lampka sygnalizacyjna zacznie migać na czerwono.

- Szybko mruga na czerwono → Aktualizacja kamery lub resetowanie kamery
- Szybko mruga na czerwono i niebiesko → Gotowy do konfiguracji
- Szybko mruga na niebiesko → Łączenie z Wi-Fi
- Wolno mruga na czerwono → Połączony z Wi-Fi
- Stały niebieski → Połączony z chmurą

TR:
Kamera açıkken, RESET düğmesine en az 5 saniye basılı tutun ve gösterge lambası kırmızı yanıp sönmeye başlayana kadar bekleyin.

- Hızlı kırmızı yanıp sönme → Kamera güncelleniyor veya kamera sıfırlanıyor
- Hızlı kırmızı ve mavi yanıp sönme → Kuruluma hazır
- Hızlı mavi yanıp sönme → Wi-Fi'ye bağlanılıyor
- Yavaş kırmızı yanıp sönme → Wi-Fi'ye bağlandı
- Durağan mavi → Buluta bağlandı