CM3 GNSS Receiver

User Guide

2021-11-10 Release

Shanghai EFIX Geomatics Co., Ltd

Preface

The purpose of this book

This article is a user manual for the Shanghai-based CM3 series, which is the instruction manual.

Introduction to this book

This user guide describes in detail how to install, configure, and use the CM3 series, and the language style in this article is simple, easy to understand, and the process of describing the operation is clear and simplistic so that beginners can learn to use all aspects of operation easily, quickly and accurately。

Experience requirements

In order to make better use of the CM3 series, EFIX suggests that you read this user guide carefully before using this product. If you do not know much about the principles of the CM3 series, please contact us for technical advice and training.

Exemption of liability

Before using this product, please be sure to read the user guide carefully in order to make better use of this product.Shanghai EFIX Geomatics Co., Ltd will not be liable for any losses caused by the failure to act in accordance with the requirements of this article, or to correctly understand the requirements of this article, but we are committed to continuously improving product functionality and performance, improving the quality of service, and reserve the right to change, optimize and improve the contents of the instruction manual, and regularly update the

content in the form of upgrades, so please pay attention to our official website (www.efix-geo.com) The latest release information.

Technology and services

The message board section has been opened on the website, if you have questions can be left through the "message board", or directly call the technical consultation phone:400-602-8152, we will answer your questions in a timely manner.

Relevant information

You can find the manual in the following ways:

1, EFIX GNSS products, the instrument box will be accompanied by a product instruction manual, convenient for you to operate the instrument.

2, the official website of the login http://www.efix-geo.com, in the "action video" column can download to watch the video operation instructions.

Your suggestion

If you have any suggestions and comments on this manual, please visit the official website of the far, in the "message board" section message, your feedback information on the quality of our manual will be greatly improved.

Preface 2
The purpose of this book 2
Introduction to this book 2
Experience requirements 2
Exemption of liability 2
Technology and services 3
Relevant information 3
Your suggestion 3
Safety Directions 5
Get started with the CM3 series (quick start). 6
1.1 Connecting the instrument 6
1.2 Set the base - the external base 6
1.3Set up the rover 6
1.4 Create a new project 6
1.5 Sitecalibration 6
1 Product introduction 8
1.1 The appearance of the receiver 8
1.2 Lower shell 8
1.3 The instrument is taken in high quantities 9
2 Receiver field work requirements 9
2.1 FL3 radio settings 10
3 PC-side web page Set up receiver instructions 12
4 Smart phone-side web page Set up receiver instructions 17
5 Operation and accuracy of static operating mode 20
5.1 Static measurement job steps 20
5.2 Static web page parameter settings 21
5.3 Data download 22
5.4 Static accuracy test 23
6 RTK setup method and tilt measurement 24
6.1 CORS login settings 24
6.2 Radio send and receive settings 24
6.3 Real-time dynamic RTK accuracy 24
6.4 Tilt measurement initialization method 24
7 Firmware upgrade method 26
7.1 Upgrade via web page 26
7.2 Upgrade via USB stick 26
7.3 The data line (mnt directory) upgrade 27
Appendix 1 use and precautions 28
Appendix 2 of the main technical indicators 29
Get technical support 31

Safety Directions

The following directions enable the person responsible for the product, and the person who actually uses the equipment, to anticipate and avoid operational hazards.

The person responsible for the product must ensure that all users understand these directions and adhere to them.

	The product must not be disposed with household waste. Dispose of the product appropriately in accordance with the national regulations in force in your country. Always prevent access to the product by unauthorized personnel.
FCC ID：2A3MU-CM3	FCC Statement, Applicable in U.S. 1) FCC 15.19 This device complies with part 15 of the FCC Rules. Operation is subject to the following two conditions: (1) This device may not cause harmful interference, and (2) this device must accept any interference received, including interference that may cause undesired operation. 2） FCC 15.21 Warning: Changes or modifications to this unit not expressly approved by the part responsible for compliance could void the user's authority to operate the equipment. 3) FCC 15.105 For a Class B digital device or peripheral, the instructions furnished the user shall include the following or similar statement, placed in a prominent location in the text of the manual: Note: This equipment has been tested and found to comply with the limits for a Class B digital device, pursuant to part 15 of the FCC Rules. These limits are designed to provide reasonable protection against harmful interference in a residential installation. This equipment generates uses and can radiate radio frequency energy and, if not installed and used in accordance with the instructions, may cause harmful interference to radio communications. However, there is no guarantee that interference will not occur in a particular installation. If this equipment does cause harmful interference to radio or television reception, which can be determined by turning the equipment off and on, the user is encouraged to try to correct the interference by one or more of the following measures: —Reorient or relocate the receiving antenna. —Increase the separation between the equipment and receiver. —Connect the equipment into an outlet on a circuit different from that to which the receiver is connected. —Consult the dealer or an experienced radio/TV technician for help. 4） FCC RF Exposure This equipment complies with FCC radiation exposure limits set forth for an uncontrolled environment. This equipment should be installed and operated with minimum distance 20cm between the radiator & your body.

Get started with the CM3 series (quick start).

Quick starts with a fixed solution using the CM-Survey software to set up the external station 1-N mode. The previous instrument installation is detailed in Chapter 3 Receiver Field Work Requirements.

1.1 Connecting the instrument

The CM3 series uses WiFi or Bluetooth to connect instruments.

Connect CM3 Series receivers

When the CM-Survey software is turned on after the host is turned on, click Connect Instrument to enter the Connect instrument interface and connect the SN number of the CM3 Series receiver using Bluetooth/WiFi (Bluetooth password:1234) , click Connection, CM-Survey will prompt "Connection succeeded" when the connection is successful.

1.2 Set the base - the external base

Connect to the base, turn on FL3 Radio Search CM3 Bluetooth for a configured connection, and set to CM3 external work mode.

1.3Set up the rover

Connect the rover, enter the Instrument Settings interface, click on rover, new station working mode: configuration protocol, channel, Baud rate, save and apply this working mode successfully, the rover settings are completed.

1.4 Create a new project

Regardless of the job mode, you must first create a new project to manage the data. Enter Project Management, click New, enter the project name, creator, select the creation time and time zone, use or create new coordinate system parameters, click OK, that is, complete the new project.

1.5 Sitecalibration

The first time you go to a measurement area, you need to dositecalibration to match the known point coordinates.

(1) Enter known point coordinates: Data Management → Point Management→ Add.

(2) Field measurement control points (if the longitude and latitude coordinates of the control points are known, enter the longitude and latitude coordinates in the Data Management →Point Management→ Add).

Note: (1) (2) order can be reversed.

(3) Select the coordinate system in the Coordinate System → Coordinate Parameters and enter the correct central meridian (if there is a projected high input projection height).

(4) Enter the Coordinate System→ the → add, the GNSS point selects the measured coordinates (or the latitude and longitude of the input), and the known points select the input plane coordinates (NEH). If both the known point plane and elevation are used, select the "horizontal and vertical" correction in the usage mode, the Horizontal correction if only plane coordinates are used, and if only elevation coordinates are used, select the Vertical correction, and select all control points in turn.

(5) Click on "Calculation" in the "Coordinate System" → "Conversion Parameters" interface,

if the residuals are small, indicating that the correction is qualified, click on "Application" and select "Yes" in the pop-up prompt.

Note: (1) Known points are best distributed at the edges of the entire job area, for example, if point correction is done with four points, the measuring job area is best inside the quads connected to the four points.

(2) Be sure to avoid the linear distribution of elevation control points, for example, if you use three elevation points for point correction, the triangle composed of these three points should be as close as possible to the positive triangle, if it is four points, as close as possible to the square, we must avoid all known points of distribution close to a straight line, which will seriously affect the accuracy of the measurement.

Once the point correction is complete, you can start measuring/lofting and so on. Only the first job in the same project requires point correction, and subsequent jobs require only a single control point base station translation.

Its physical operation can be found in the CM-Survey software operation video, which is available next Path: http://www.efix-geo.com download in the Action Videos column.

1 Product introduction

1.1 The appearance of the receiver

CM3 Figure:

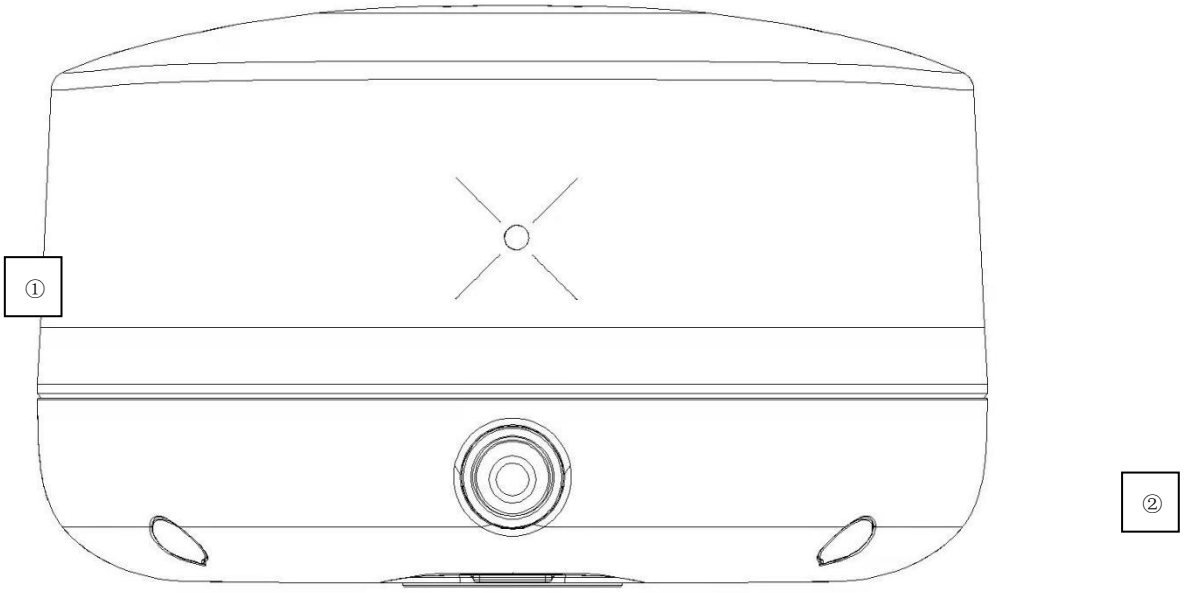

Detailed description of the indicator

The CM3 indicators above are: differential data indicator, power indicator.

Indicator	Color	Meaning
①Differential data indicator	Yellow	In base mode, the color is yellow
	Yellow Green	When the mobile station receives the differential data, the single point or float is yellow The mobile station receives differential data fixed and green
②Power Indicator	Red	Red in normal power-on use
	Yellow	Yellow in the shutdown and power-on charging state

Detailed description of the button

Button	Meaning
②Power button	Press and hold 3s to shut down or shut down The shutdown state is charged as a red light constant and as a green light constant when fully charged

1.2 Lower shell

The lower shell is mainly contained

Type-C interface: you can use the Type-Cdata line to download static data, USB drive upgrade firmware;

TNC interface: connecting rod antennas;

Main nameplate: includes instrument model, SNnumber, PNnumber, etc.

1.3 The instrument is taken in high quantities

Using the auxiliary height gauge, the bottom of the antenna is selected by **means of** measurement

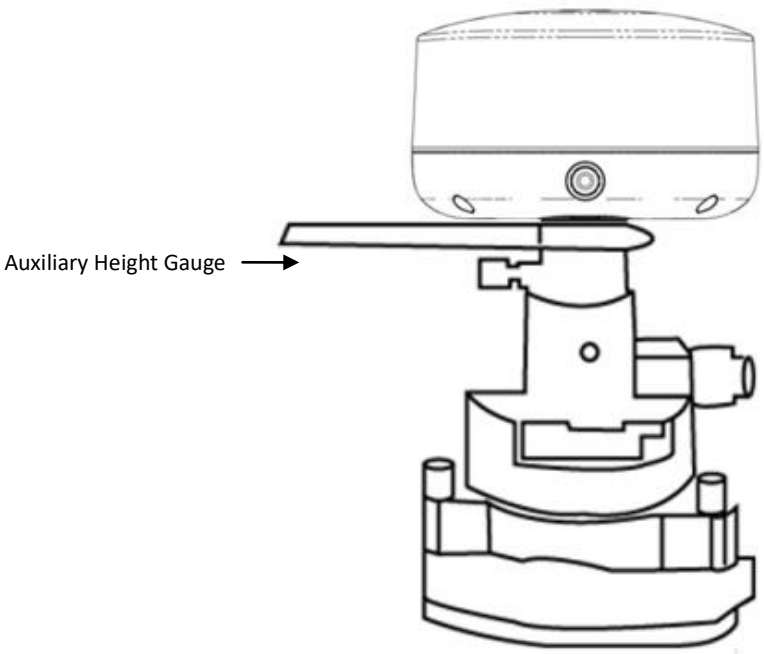

2 Receiver field work requirements

Precautions:

1. The distance between the station mode, the base station scaffold and the station whip antenna scaffold is recommended to > more than3mto avoid interference with satellite signals by radio stations.
2. The reference station should be located in a higher terrain, open field of view, to avoid high-voltage lines, transformers and other strong magnetic fields, in order to facilitate the transmission of UHFwireless signals and satellite signal reception, network mode also need to pay attention to the operator network coverage of hypothetical points.
1. Radio mode, if the mobile station is far away, also need to add a radio antenna lengthener.
2. If the reference station is mounted on a known point, to do a strict alignment.
3. The connection between the power cord and the battery should be red, black and negative to avoid short circuits.
4. When the station is working, make sure to connect the external antenna, otherwise long hours will cause the sending signal to be absorbed by the station itself and burn the station.
5. When connecting cables, note the connection of LEMOhead red dots to red dots.
6. Working in GPRSmode,GPRS traffic per hour is around 0.5M-1.5M(related to the number of satellites and network environment).

The illustration of the installation of the external radio station of the base station is as follows:

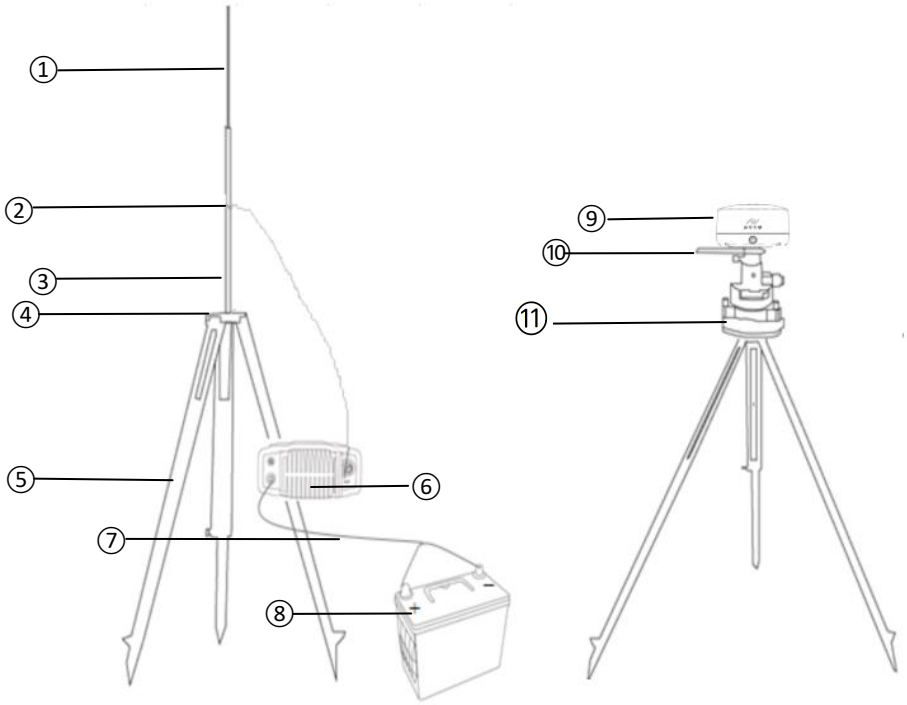

(1) Whip antenna(2)Radio antenna connection base(3)Extend rod(4)aluminum disc

(5) Scaffolding(6)FL3Radio(7) Radio Power Cord(8)Battery

(9) Host(10) Auxiliary Gauge(11)Base

2.1 FL3 radio settings

In external station job mode, use the radio panel to turn on the key to open the station, and use the left and right switch keys and up and down keys to configure the station.

See FL3 external radio instructions

Note: Each channel corresponds to a unique frequency, which can be set by the remote radio write-up software.

Transparent					
0	Arbitrarily writable				
1	411.050	**17**	465.550	**33**	443.000
2	412.050	**18**	467.550	**34**	444.000
3	413.050	**19**	469.550	**35**	445.000
4	414.050	**20**	451.550	**36**	446.000
5	415.050	**21**	445.013	**37**	447.000
6	416.050	**22**	445.025	**38**	448.000
7	417.050	**23**	445.038	**39**	449.000
8	418.050	**24**	445.050	**40**	450.000

9	419.050	**25**	445.063	**41**	438.125
10	410.050	**26**	445.075	**42**	440.125
11	453.550	**27**	445.088	**43**	441.125
12	455.550	**28**	445.100	**44**	442.125
13	457.550	**29**	445.113	**45**	443.125
14	459.550	**30**	445.000	**46**	444.125
15	461.550	**31**	441.000	**47**	446.125
16	463.550	**32**	442.000	**48**	447.125

TT450s					
0	Arbitrarily writable				
1	411.050	**17**	465.550	**33**	443.000
2	412.050	**18**	467.550	**34**	444.000
3	413.050	**19**	469.550	**35**	445.000
4	414.050	**20**	451.550	**36**	446.000
5	415.050	**21**	445.013	**37**	447.000
6	416.050	**22**	445.025	**38**	448.000
7	417.050	**23**	445.038	**39**	449.000
8	418.050	**24**	445.050	**40**	450.000
9	419.050	**25**	445.063	**41**	438.125
10	410.050	**26**	445.075	**42**	440.125
11	453.550	**27**	445.088	**43**	441.125
12	455.550	**28**	445.100	**44**	442.125
13	457.550	**29**	445.113	**45**	443.125
14	459.550	**30**	445.000	**46**	444.125
15	461.550	**31**	441.000	**47**	446.125
16	463.550	**32**	442.000	**48**	447.125

In the menu bar, you can set up communication protocols, including the Transparent and TT450s protocols. Through the left and right key switching protocol, channel, Baud rate, transmit power interface, through the upper and lower key switching different protocols, different channels, different baud rate, different transmit power, power key determination settings and configuration completed.

When the base station starts successfully (i.e. the base station differential data lamp 1s flashes once) and the connection is normal, the radio transmitter flashes once a second, indicating that the data is transmitting normally.

note

Once the transmission station channel of the reference station is modified, the mobile station also needs to be modified to the corresponding channel, otherwise the differential signal cannot be received, only the same channel can work properly!

3 PC-side web page Set up receiver instructions

The process of operation	Detailed description	Note
1.Login the web page	First step：turn on receiver WiFi,Search for receivers on your computer or other WiFi-enabled device；	Default name: Receiver SNnumber
	Second step:open google chrome browser, Enter the website 192.168.1.1 to enter the login interface；	Default user name: admin Default password: password
2.Receiver status	Click the "Receiver Status" on the left side of the page. You can check: ➢ [The receiver position] ➢ [Receiver activity] ➢ [Google Map]	The receiver position interface shows the longitude and latitude of the receiver's current phase center, dop value, the satellite used, the satellite tracked, and the receiver clock. The receiver activity interface can view satellite information tracked by the receiver, current UTC time, receiver runtime since power-on, internal storage and available storage, battery power, whether to connect to external power supply. Google Map shows the current location in Google Map.
3.Satellites	Click the "Satellites" on the left side of the page. You can check: ➢ [Satellite tracking table] ➢ [Satellite tracking map] ➢ [Star chart] ➢ [Satellite settings]	[Satellite tracking table]You can see the satellites tracked by the receiver, displaying information about each satellite tracked in the form of a list, including satellite number, satellite type, altitude angle, adhesion angle, L1 signal-to-noise ratio, L2 signal-to-noise ratio, L5 signal-to-noise ratio, B1C signal-to-noise ratio, B2A signal-to-noise ratio, and whether to use it. [Satellite tracking map]You can view satellite information as an icon, and you can check the type of satellite you want to view and the signal-to-noise ratio to see the information. [Star chart]Displays a satellite type map. [Satellite settings]Satellite systems can be enabled or disabled.
4.Receiver	Click the "Receiver	[Summary]View GNSS receiver information and

configuration	configuration" on the left side of the page. You can check: ➢ [Summary] ➢ [Antenna parameter settings] ➢ [Reference station settings] ➢ [Receiver reset] ➢ [Language switching] ➢ [Account management] ➢ [HCPPP settings]	reference station information. [Antenna parameter settings]Antenna parameter settings can be set antenna quantity, antenna manufacturer, antenna type, antenna number, antenna height, height cut-off angle, PDOPlimits. [Reference station settings] You can set the reference station's manual start base station, self-starting base station, self-start mobile station mode, you can set the reference station coordinates, support sampling average. Note: There are several input methods for the location of the reference station. You can click to get the current position to set the reference station location, this method of reference station coordinates because it is measured in a single point state of an antenna phase center coordinates, not very accurate; Sampling average, positioning limit is divided into a single point and fixed, single point refers to a single point of state can collect reference value coordinate data; Collecting a number means collecting so many points in total, and then taking the average and automatically filling in the incoming reference station location column. The progress bar represents the percentage value of the total number of collected coordinates. Coordinate offset threshold, which sets the difference between the current latitude and longitude coordinates obtained by the base station mode and the longitude and latitude coordinates in the base station list. Base station list, you can set up several fixed base station location of the longitude and latitude coordinates as a list of typing, when set up since the start of the base station after the receiver automatically match the nearest latitude and longitude coordinates to start sending differential data. Click Save to save your current settings. [Receiver reset] The receiver can be shut down, restarted, satellite data cleared, and the appearance settings restored. Restarting the receiver means restarting the receiver, clearing the satellite data refers to clearing the satellite

		data found by the receiver, restoring the factory settings refers to clearing the receiver and reverting to the factory configuration, and turning off the receiver means to turn off the receiver. [Account management]Interface language switching is supported。 [Account management] Accounts can be added, saved, deleted, and passwords modified; [HCPPP settings]Select the HCPPPcalendar time in the drop-down box.
5.Data recording	Click the "Data recording" on the left side of the page. You can check: ➢ [Recording settings] ➢ [FTP push settings] ➢ [FTP push records] ➢ [Data download]	[Recording settings] If automatic recording is enabled, static data is recorded as soon as the receiver is turned on and satellite single point positioning is found. Storage is divided into internal storage and external storage, internal storage refers to the receiver's own storage capacity, the specific value is seen in the receiver, external storage refers to the inserted mobile hard disk, the total capacity and available capacity depends on the hard disk. Note: [Recording settings] Whether to turn on --- thread on Sample intervals --- 1Hz to 60s are optional The height cut-off angle --- filled in from 0 to 90 degrees The recording duration --- 0 to 1440 minutes Site name --- This site name Antenna height --- fill in the antenna height Measure --- can be selected at phase center, high, oblique high school RINEX Storage --- off,3.0x,2.11 selected The start time --- timed start storage Whether the start time is enabled --- Yes/No button represents whether the previous option start time is, yes, start recording at the set time, or start immediately. Loop storage --- automatically overwrites thread early data after the set storage space exceeds. Single acquisition --- whether to store once according to the set duration Storage location --- optional internal and external memory Storage space --- reserves memory space for threads

		ftp push -- You can set ftp push to turn off [FTP push settings]You can set up 3 FTP servers, click to modify the pop-up FTP push settings window can set the server IP, port, remote directory, local push directory, server description, username, password. FTP push can set up the FTP server to be pushed, otherwise select Off. [FTP push records]A list of realistic FTP push records. [Data download]
6.IO settings	Click the “IOSettings” on the left side of the page	[RTK client] Connection protocols include NTRIP, APIS_ROVER, which support CORS and handbook network mobile stations, respectively. Under the NTRIP protocol, CORS can be logged in by setting the IP, port, source list, username, password. under the APIS_ROVER protocol, you can log on to the remote network server and use it as a mobile station for the network RTK. [TCP/UDP_Client/Ntrip Serve] 1、[TCP/UDP_Client/Ntrip Serv] The protocol is optional for TCP,UDP,NTRIP1,NTRIP2 protocols. 2、A "remote IP" is the address and port number of a PC received at the remote end, which is the destination address of the receiving terminal. 3、The data send port can be set up in the port number. 4、Differential data, raw data, astrological data,HCPPPdata,HRCdata,GPGGA,GPGSV,GPRMC, GPZDA,GPGST,GPVTG,GPGSA,GPPOS are the machine support output data types, can be set whether the output and the output frequency. 5、After setting the parameters, click "OK" at the bottom of the page to save the current settings, data entries cannot be edited during data sending, details can be viewed under the detailed button. [TCP/serve/Ntrip caster] The Ntrip protocol and the TCP protocol are supported in the connection protocol, and the Ntrip protocol allows the user to log directly into the CM3 series to obtain data. [Serial Port] Data output Baud Rate, Differential Data,RawData,HCPPPData,HRCData,GPGGA,GPGSV,GPRMC,GPZDA,GPGST,GPVTG,GPGSA,GPPOS are

		the machine support output data types, can be set whether the output and output frequency. If differential data needs to be output, it needs to be set to self-starting base station mode, with an external radio station typically with a Baud rate of 9600. [Bluetooth] Data output Baud Rate, Differential Data,RawData,HCPPPData,HRCData,GPGGA,GPGSV,GPRMC,GPZDA,GPGST,GPVTG,GPGSA,respectively, the machine supports the output data type, can be set whether the output and the output frequency. If travel sub-data is required, it needs to be set to self-starting base station mode. [Radio] The differential data format of the built-in radio transmission and the data forwarding switch, sending differential data, need to be set to the self-starting base station mode, the radio module must be turned on power-up, set power and frequency, etc.
7.Network settings	Click the "Mobile network" on the left side of the page. You can check: ➢ [Mail alarm] ➢ [HTTP] ➢ [HTTPS] ➢ [FTP service]	[Mail alarm]Contains three things: recipient information, sender information, and message alarm settings. Recipient information can be filled in 1-3recipients, sender information, including account number, password, and server address, email alarm settings for receiver power-on mail alarm, external power interruption mail alarm, low battery level mail alarm, FTPpush failure mail alarm, registration code expired or about to expire (7 days in advance) mail alarm options checked. [HTTP]HTTP ports can be set to 80 by default and not modified. [HTTPS]HTTP channels are security-targeted, and sensitive industry customers need to use this feature to transfer data, set enable or port. [FTP service] Set up a username and password。
8.Module settings	Click the "WiFi network" on the left side of the page. You can check: ➢ [Summary] ➢ [WiFi settings] ➢ [Bluetooth settings] ➢ [Radio settings]	[Summary] Contains WiFi and radio information. WiFi information shows power status, WiFi mode, MAC address, SSID, and radio information includes station type, station power, air baud rate, radio frequency, radio protocol, radio band, frequency range. [WiFi settings]Set WiFion, power on automatically, WiFimode, SSID.

		[Bluetooth settings]Includes local name, MACaddress, PINcode, default 1234(do not modify, this will invalidatethe NFCfunction). [Radio settings] Set the station status, power on whether to start, radio protocol, station step value, air baud rate, radio power, radio frequency, etc. , if you simply use the web page settings, want to use the radio function to turn the radio state on, power on self-start, IOsettings of the station if need to use, the premise is also must turn on the station, set the corresponding frequency, power and so on.
12.Firmware	Click the "Firmware " on the left side of the page. You can check: ➢ [Firmware information] ➢ [Hardware version] ➢ [Profile] ➢ [System logs] ➢ [User log] ➢ [Firmware upgrade] ➢ [Board upgrade] ➢ [Receiver registration]	[Firmware information]Displays the current firmware version of the firmware, the firmware release date. [Hardware version]For developers to learn about receiver hardware. [Profile] The current settings for the receiver can be saved as a profile download, or a saved profile can be mounted. [System logs] You can download the system software run logs for easy problem analysis by developers. [User log] You can set the date and time of the receiver power-on, the time of external power disconnect, the time of completion of Search Star, and so on. [Firmware upgrade] Web firmware upgrade, please refer to the details [CM3 Series firmware upgrade method]. [Board upgrade] Select the board firmware to upgrade the board. [Receiver registration]Implements the function of registering the receiver.

4 Smart phone-side web page Set up receiver instructions

The process of operation	Detailed description	Note
1. Login webpage with your smart	First step: turn on the receiver WiFi, use the mobile phone wireless	Default name: Receiver SN number

phone	search and connect to the receiver;	
	Second step: open the smart phone browser, enter the remote address 192.168.1.1 in the address bar, enter the login interface;	Default username: admin Default password: password
2. Receiver status	Click the "Receiver Status" on the left side of the page. You can check: ➢ [The receiver position] ➢ [Receiver activity]	[The receiver position]The interface shows the longitude and latitude of the receiver's current phase center, the DOP value, the satellite used, the satellite tracked, and the receiver clock. [Receiver activity] You can view the satellite information tracked by the receiver, the current UTC time, the receiver runtime since power-on, internal storage and available storage, external storage, whether to access external power supply, battery power.
3. Satellites	Click the "Satellites" on the left side of the page. You can check: ➢ [Satellite tracking] ➢ [Satellite settings]	[Satellite tracking]Contains a list of stars and satellites. Satellite distribution can be seen in the star map, and satellite tracking information can be seen below the satellite tracking GPS satellite, GLONASS satellite, BDS satellite, GALILEO satellite and QZSS satellite. [Satellite settings]You can enable or disable a single satellite by clicking the button.
4. RTK work mode	Click the "RTK work mode" on the left side of the page.	[RTK work mode] Base external radio work mode Base network mode Rover network mode Rover Ntrip work mode Rover radio work mode Base combination
5.Data recording	Click the "Data recording" on the left side of the page.	[Datarecording]The total state of the data record can be turned on or off for the entire data record. If automatic recording is enabled, static data is recorded as soon as the receiver is turned on and satellite single point positioning is found. Sample interval, height cut-off, record duration, site name, antenna height setting, method of extraction, RINEX storage can also be advanced: start recording date, time, point storage, loop storage, single acquisition, storage location, storage space, observer, FTP push or not.

6. IO settings	Click the "IO setting" on the left side of the page.	[RTK client]Connection protocols include NTRIP, APIS_ROVER, which support CORS and handbook network rover stations, respectively. Under the NTRIP protocol, CORS can be logged in by setting the IP, port, source list, username, password. under the APIS_ROVER protocol, you can log on to the remote network server and use it as a mobile station for the network RTK. [TCP/UDP_Client/Ntrip Serve] 1、[TCP/UDP_Client/Ntrip Serve]The protocol is optional for TCP,UDP,NTRIP1,NTRIP2protocols. 2、A "remote IP" is the address and port number of a PC received at the remote end, which is the destination address of the receiving terminal. 3、The data send port can be set up in the port number. 4、Differential data, raw data, astrological data,HCPPPdata,HRCdata,GPGGA,GPGSV,GPRMC,GPZDA,GPGST,GPVTG,GPGSA,GPPOSare the machine support output data types, can be set whether the output and the output frequency. 5、After setting the parameters, click "OK" at the bottom of the page to save the current settings, data entries cannot be edited during data sending, details can be viewed under the detailed button. [TCP/serve/Ntrip caster] The Ntrip protocol and the TCP protocol are supported in the connection protocol, and the Ntrip protocol allows the user to log directly into the CM3 series to obtain data. [Serial Ports] Data output Baud Rate, Differential Data,RawData,HCPPPData,HRCData,GPGGA,GPGSV,GPRMC,GPZDA,GPGST,GPVTG,GPGSA,GPPOSare the machine support output data types, can be set whether the output and output frequency. If differential data needs to be output, it needs to be set to self-starting base station mode, with an external radio station typically with a Baud rate of 9600. [Bluetooth] Data output Baud Rate, Differential Data,RawData,HCPPPData,HRCData,GPGGA,GPGSV,GPRMC,GPZDA,GPGST,GPVTG,GPGSA,respectively, the machine supports the output data type, can be set whether the output and the output frequency. If travel sub-data is required, it needs to be set to

		self-starting base station mode. [Radio] The differential data format of the built-in radio transmission and the data forwarding switch, sending differential data, need to be set to the self-starting base station mode, the radio module must be turned on power-up, set power and frequency, etc.
8. Module	Click the "Module" on the left side of the page. You can check: ➢ [WiFi settings] ➢ [Bluetooth settings]	[WiFi settings] Set power status, power-on start-up, WIFI mode, SSID, MAC. [Bluetooth settings] The local name, MAC address, PIN, discoverable status is displayed in the summary;
9. Firmware	Click the "Firmware" on the left side of the page. You can check: ➢ [Firmware information] ➢ [Firmware upgrade] ➢ [Hardware information]	[Firmware information] Displays the current firmware version of the firmware, the firmware release date. [Firmware upgrade] Web firmware upgrade, please refer to the details [CM3 series firmware upgrade method]. [Hardware information] For developers to understand the receiver hardware information, including motherboard, core board, PN, SN, board firmware version number.
9. Other settings	Click the "Firmware" on the left side of the page. You can check: ➢ [Receiver registration] ➢ [Language switching] ➢ [Network services] ➢ [Account management]	[Receiver registration] Implements the function of registering the receiver. [Language switching] You can switch the web language. [Network services] Including FTP service and HTTP two settings, FTP service can be set to the machine FTP storage username password, HTTP port number, default 80, do not modify。 [Account management] Set your username, password, and change your password.

5 Operation and accuracy of static operating mode

5.1 Static measurement job steps

Step1Set up the instrument

The instrument is placed on the measuring point, the height is moderate, the scaffold is solid, and the level is strictly aligned to the middle.

Step2Measures antenna height

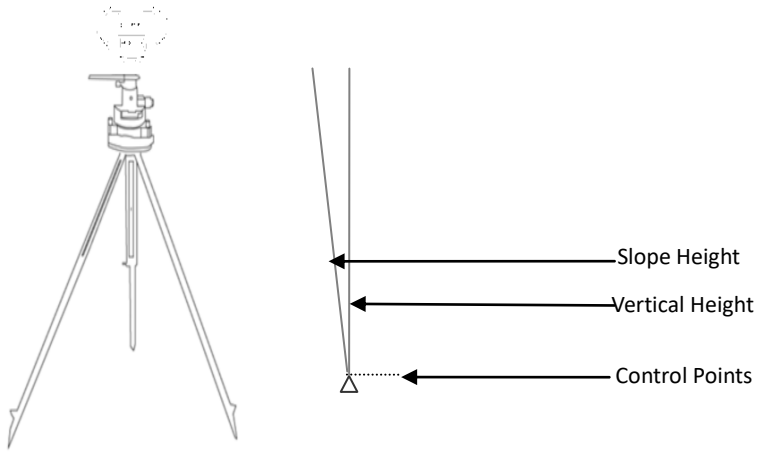

Step3Record

Record the name call, instrument SNnumber, instrument height, start observation time.

Step4Collect static data

Turn on the receiver, set the receiver to static mode, the receiver will automatically start recording static after searching for enough satellites;

Receiver records static process do not touch scaffolding or instruments, try to avoid human interference, arrange for special guards.

Step5Ends static recording

At the end of acquisition, turn off static mode and measure antenna height again from three directions before closing, recording the average.

5.2 Static web page parameter settings

5.2.1 Static parameter settings

Visit the receiver page via the web page 192.168.1.1,select Record Settings in Record Settings, Select Modifyrecord1, check Auto Record Static, collect interval select1s, height cutoff setting10, and record duration1440minutes, storage formatRINEX, record date, record time, point storage, loop storage, single acquisition all select No, other default, then click "Save" and click "Open" button to start recording static.

5.2.2 Parameter Description

Automatically record static --- set whether to automatically open this record after powering on Search

Sample intervals --- 1Hz to 60s are available

The height cut-off angle ---record1 can be set

The duration of the record --- the record duration of each file

The site name --- default to the SN number, which can be set

Antenna height, measurement method --- according to the actual scene settings

RINEX --- 2.11 and 3.0x are available in a compressed format

Start record date --- a specific date to open the record

Start Record Time --- Timed Start Storage (UTC Time)

After the whole point storage --- select the whole point, the recording duration needs to be set to a value that can be divisive by 1440 minutes

The loop storage --- automatically overwrites the thread's early data after the set storage space has been exceeded

After a single acquisition --- select Yes, that is, after recording a file with a set duration, stop, or not as a continuous record

Storage locations --- optional internal and external storage, which is external storage

Storage space --- reserves memory space for threads, beyond which it is recorded based on the settings of the loop storage to determine whether records are recorded

Observers, observatories --- can be set up to facilitate the differentiation of machines

FTP Push --- set this record to be pushed to a different FTP server

5.3 Data download

(1)USB mode download:

Step1 Connect to your computer using the TYPE-C cable USB port.

Step2Download static data

Find the collected static data on the mobile disk ejected from the computer and copy it to the computer. All stored static data in theCM3 series is under its repo_folder.

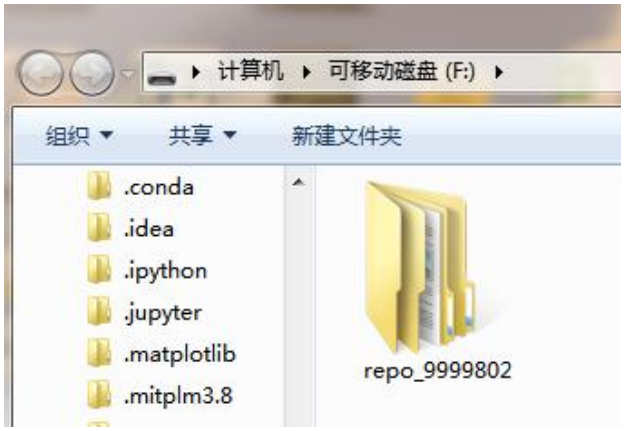

(2)ftp mode download:

The receiver connects to the computer via WiFi,turns on the computer or my computer, enters the ftp://192.168.1.1in the address bar, the username: ftp, passwordftp, go to find the corresponding data to copy out.

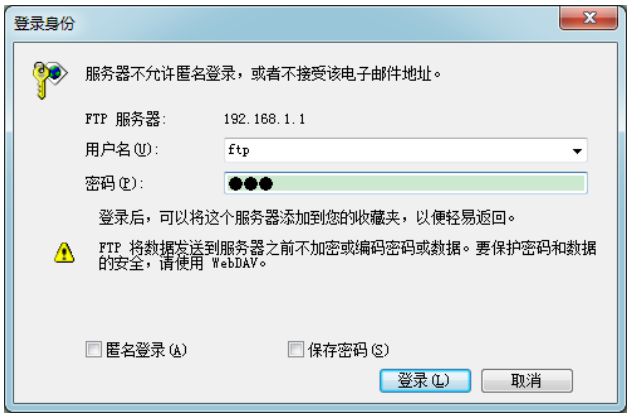

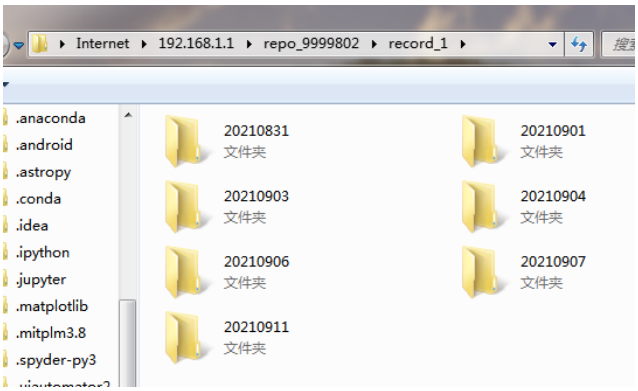

Note: Web mode focuses on settings, you can set how many sets of data are logged on and off, and ftpmode focuses on data export, so data export is recommended using ftp mode or Type-C data line export.

5.4 Static accuracy test

Static measurement accuracy refers to the degree to which the static measurement baseline vector results of the device under test conform to the known baseline vector (horizontal and vertical components).

Static measurements are tested on outdoor reference points. Here are the steps:

(1) Short baseline fast static measurement (around 3km)

The two base station receivers are located on two reference points with wide field of view, with a distance of about 3km between the two points. Save the original data in the RINEX data format. The height angle is set to 10o, the sample rate is set to 10s, the test time is 40min, and two periods of time are observed.

(2) Medium-length baseline static measurement (around 10km)

The two base station receivers are located on two reference points with wide field of view, about 10 km apart. Save the original data in the RINEX data format. The height angle is set to 10o, the sample rate is set to 10s, the test time is 2h, and three periods of observation are observed.

(3) Medium-length baseline static measurement (around 30km)

The two base station receivers are located on two reference points with wide field of view, about 30 km apart. Save the original data in the RINEX data format. The height angle is set to 10o, the sample rate is set to 10s, the test time is 4h, and three periods of observation are observed.

(4) Medium-length baseline static measurement (around 50km)

The two base station receivers are located on two reference points with wide field of view, about 50 km apart. Save the original data in the RINEX data format. The height angle is set to 10o, the sample rate is set to 10s, the test time is 8h, and three periods of observation are observed.

The collected static data can be downloaded via ftp or Type-C.

Evaluation method: Using random post-processing software, the observation data is processed, the combination of Beidou/GPS dual system under different baseline lengths, the static measurement level of single Beidou and single GPS, the vertical measurement accuracy, and the baseline repeat check are carried out.

6 RTK setup method and tilt measurement

6.1 CORS login settings

1.The handbook has a network after loading the SIM card;
2.Turn on the CM-Survey software, Bluetooth or WIFI to connect the receiver;
3."Instrument Settings" → "Mobile Station" → "New" → "Handbook Network": network protocol to select CORS, enter the server address and port, get the source list, choose to use the source list, enter username and password, save and apply.

6.2 Radio send and receive settings

Radio mobile station settings:
1) Receiver power on;
2) Turn on the CM-Survey software, Bluetooth or WIFI connection receiver;
3) "Instrument Settings" → "Mobile Station" → "New" → "Radio": select the radio protocol, channel, Baud rate, save and apply can be configured, configure a CM3 external radio station as a base station, protocol, channel, Baud rate configuration and mobile station, the master interface of the handbook to view the mobile station receiver receiving data.
Base External Radio - Bluetooth Settings:
1) Receiver power on;
2) FL3 radio power on, Bluetooth search receiver Bluetooth, so that FL3 and CM3 to establish a connection, CM3 will automatically switch to base station mode;
3) Configure FL3 radio protocol, channel, Baud rate lamp information, configuration can be completed, view FL3 radio Bluetooth light (BT) has been long on, differential light (RX/TX) one second flash configuration success.

6.3 Real-time dynamic RTK accuracy

Mobile station setup method:
1)The handbook is connected to the receiver via the CM-Survey software;
2)"Instrument Settings" → "Mobile Station" → "New" → "Handbook Network";
3)Network protocol select CORS, enter server address and port (CORS account), click to get the source list, select the corresponding source list, enter username and password, save and apply;
4)After the main interface of the handbook shows that the receiver is fixed, the measurement interface takes continuous point measurements according to the 1s interval, exports the point data and imports it into the RTKQC software, so that the accuracy can be viewed.

6.4 Tilt measurement initialization method

1）Measurements interface, click The tilt measurement icon turns on the tilt function.

2）At this point, you will go to the initialization interface and follow the interface prompt steps to initialize. The tilt measurement icon is green after successful initialization , you can use tilt measurements.

2) Enter the name and instrument height before the measurement and click on the measurement icon The measuring point is automatically saved to point management after acquisition is complete.

Note:

1) At the beginning of initialization, the rod height of the instrument is consistent with the height of the instrument entered by the software.

2) Re-initialization is required when the tilt measurement icon is red.

3) If the controller is displayed during the tilt measurement, the RTK can be shaken slightly left or right or before and after until it changes to continue to use the inertia.

4) Tilt initialization process, do not use force to quickly shake RTK according to the page prompt slowly wiggle the middle bar, angle into 30 degrees, after the completion of initialization can again center to observe whether the center number is within 30 points.

5) To turn off tilt measurement, click to enter the Settings Interface → Tilt, click on the lower right corner to turn off tilt measurement. (When the tilt measurement icon is , click the tilt measurement icon or turn off the tilt function.)

7 Firmware upgrade method

7.1 Upgrade via web page

Web firmware upgrade, select Browse to add the corresponding .binfile, click OK to upgrade, note: less than50% of the battery will remind you that the upgrade is not possible.

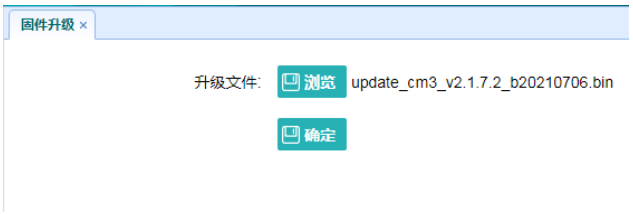

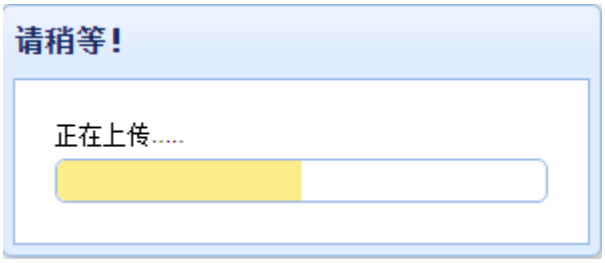

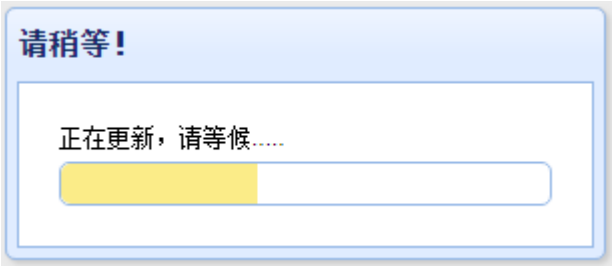

The receiver firmware upgrade is complete after the update is complete (approximately3minutes).

7.2 Upgrade via USB stick

1、Turn off the receiver.

2、Insert a USBstick containing the upgrade file (e.g.update_cm3_v2.1.7.2_b20210706.bin) into the OTGline, and one end of the OTGline into the receiver；

3、On, the receiver will automatically detectthe .bin file to be upgraded on the USB stick (it is recommended that no other .bin files be stored on the USBstick). After both lights are on and flashing at the same time, press the power key to enter the upgrade and cancel the upgrade twice in a row.

4、When upgrading, the two lights flash alternately back and forth, and when the upgrade is complete, the receiver restarts.

5、The OTG line is unplugged to see if the upgrade was successful through Host Information on the web page.

6、The power-on receiver is normal for searching for stars.

7.3 The data line (mnt directory) upgrade

The receiver is turned on, the receiver is connected to the computer using the Type-Ccable, and the upgrade file(e.g.update_cm3_v2.1.7.2_b20210706 .bin) iscopied to the receiver mntdirectory and the receiver is restarted. After both lights are on and flashing at the same time, press the power key to enter the upgrade and cancel the upgrade twice in a row.

Appendix 1 use and precautions

Measurement instrument is a complex and sophisticated equipment, in the daily carrying, handling, use and preservation, only through the correct use and proper maintenance, can better ensure the accuracy of the instrument, extend its service life.

1 When using CM3 Series receivers: Do not remove the instrument yourself, contact the supplier in the event of a failure；

2 Please specify the brand-name regulated power supply, and strictly follow the nominal voltage of the far instrument, so as not to cause damage to the radio and receiver；

3 Please use the original battery and accessories, the use of non-dedicated batteries, chargers may cause explosion, combustion and other unexpected circumstances, the use of non-original accessories are not eligible for warranty；

4 When charging with a charger, be careful to stay away from fire sources, inflammable and explosive items, and avoid serious consequences such as fire；

5 Do not dispose of discarded batteries at will and dispose of them in accordance with local management practices for special waste；

6 The station may produce high temperatures during use and be careful to prevent burns when using. Reduce and avoid unnecessary shelter on radio surfaces and maintain a good ventilation environment；

7 Do not charge the battery while supplying power to the station；

8 Do not be exposed to high gain antennas for long periods of time and maintain a distance of more than 1-1.5 meters when using the radio station for long periods of time to avoid radiation damage；

9 Do not use antennas and alignment bars on thunderstorm days to prevent accidental injury due to lightning strikes；

10 Please strictly follow the user manual in the connection method to connect your device, each plug-in should pay attention to plug-in, power switch to turn on in turn；

11 It is prohibited to plug in and out of the wires without cutting off the power；

12 Please do not continue to use after each wire is broken, should promptly purchase and replace new wire, to avoid unnecessary injury；

13 Please do not continue to use after each wire is broken, please buy and replace the new wire in time to avoid unnecessary injury；

14 After the middle rod is damaged, it should be repaired and replaced in time, and shall not be used in a residual manner；

15 The tip of the middle bar is easily injured, and when using the rod antenna and the center rod, pay attention to safety。

Appendix 2 of the main technical indicators

Receiver characteristics	Satellite tracking	Beidou All-Constellation
	OS	LINUX
	Waterproof breathable film	Support
	The initialization time	5s③
	The data output rate	1Hz
	Initialization reliability	>99.99%
The appearance of the receiver	Appearance	A streamlined cylinder
	Button	A power button
	Indicator	1 correction data indicator 1 power indicator
Nominal accuracy (1).	Static accuracy	Plane accuracy: ±(2.5 plus $0.5\times10^{-6}\times D$) mm Elevation accuracy: ±(5 plus $0.5\times10^{-6}\times D$) mm
	RTK accuracy	Plane accuracy: ±(8 x $1\times10^{-6}\times D$) mm Elevation accuracy: ±(15 plus $1\times10^{-6}\times D$) mm
	Single accuracy	1.5m
	Code difference accuracy (2).	Plane accuracy: ±0.25m-1ppm Elevation accuracy: ±0.50m-1ppm
Electrification parameters	Host power consumption	3.2W
	Battery capacity	3400mAh*2*7.4V=50.32Wh
	Battery	Dual-battery intelligent power

	technology	supplying system
	Battery life [(4).]	RTK mode for12hours, with external direct current and automatic switching of built-in battery power
	External power supply	5V DC
Physical characteristics	Size	12.4cm×13.5cm
	Weight	≤1Kg
	Material	AZ91D magnesium alloy
	Operating temperature(discharge)	-20℃~+60℃
	Operating temperature(charging)	0℃~+45℃
	Storage temperature	-55℃~+85℃
	Wetness	100% no condensation
	Waterproof and dustproof	IPX0
	Shock vibration	IK08
Data communication	I/O interface	1 external UHF antenna interface
		1 Typo-C data port with power supplying, USB data downloading, USB drive upgrade
	Differential format	CRM、RTCM2.3、RTCM3.0、RTCM3.2、BDZY、RTD
	WiFi	With WIFI, any smart terminal can connect to the receiver;
	Bluetooth	With Bluetooth, any smart terminal can connect to the receiver
	NFC	WiFi/Bluetooth automatic connection is achieved by touching the master
Static storage	The storage format	RINEX
	Storage space	6G storage is standard for space protection

	How to download	USB Download FTP Download
Auxiliary measurement	Tilt measurement	Precision MEMS tilt sensor for accuracy of less than 30degrees ≤3cm
	Electronic bubbles	Receiver center automatic measurement can be achieved, really freeing your right hand
The data output	The output format	NMEA 0183,PJKplane coordinates, binary codes
	How it is output	BT/WIFI
Built-in web pages	Query functionality	Query receiver status and settings information
	Set the function	Receiver mode of operation, communication mode, static acquisition, data output, etc

Concentrate:

(1) Accuracy and reliability will be affected by external conditions such as multipaths, obstacles, satellite geometric position and atmospheric conditions, and it is recommended that the instrument be placed in an open, non-obvious electromagnetic interference and multi-path environment. A precision star calendar is required when the baseline is longer than 30 km and can take up to 24hours to observe in order to reach the indicator of a high-precision static specification.

(2) Depends on the performance of the system that provides differential data.

(3) May be affected by atmospheric conditions, signal multipaths, obstacles and satellite geometric locations.

(4) Battery life varies according to different operating modes, battery life and external temperature.

The technical parameters and configuration of the Company's products are subject to change without notice.

Get technical support

If the tips and tricks in this operating manual FAQ do not resolve the issue, please contact Far Away Technical Support.

Customer Service Toll Free:400-602-8152

Website: www.efix-geo.com

The website of Shanghai EFIX Geomatics Co., Ltd provides the latest information on the CM3series of products.

This product strictly implements Shanghai enterprise standard Q/201100ZYDH001-2021GeodesicGNSSreceiver, and has obtained the metering instrument type approval certificate (2021L200-31).