SVBONY

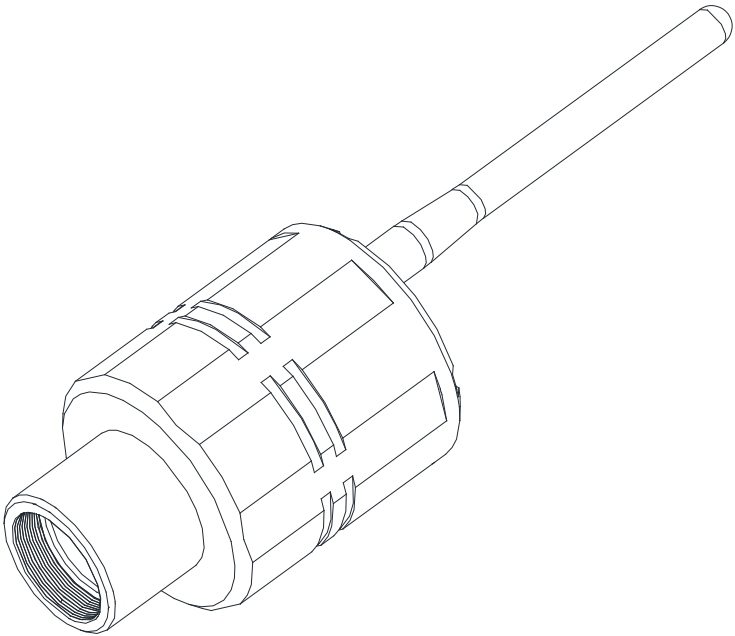

SC001
User Manual

To Customers

Hello, friends. You can download SC001 User Manual pdf file or print this file. SVBONY has the rights to modify this document without prior notice. Please download the latest version from our official website.

Thanks for purchasing your new SVBONY astronomy camera (WiFi)!
This manual will give you a brief introduction of the SC001 camera.
Please read this manual completely before using it. If you have any questions, please feel free to contact us:
Facebook: www.facebook.com/svbony
For software installation instructions and other technical support, please email us: info@svbony.com

EU Importer：Germany Retevis Technology GmbH
Address：Uetzenacker 29,38176 wendeburg

Menu

1
Functional Part..... 1
Important size display..... 2
APP interface introduction..... 2
APP download and installation..... 2
Features of the product..... 2
How to use..... 3
WiFi usage mode..... 3
UVC mode use..... 3
Guide to time-lapse photography..... 3
Indicator and operating conditions..... 4
General Clean..... 4
Quality Assurance..... 4
Specifications..... 4
Packing details.....
DE(6-10)
FR(11-15)
IT(16-20)
ES(21-25)
JP(26-30)
RU(31-35)

Functional Part

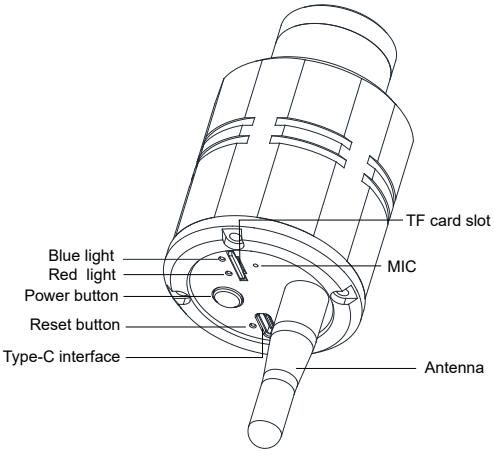

Important size display

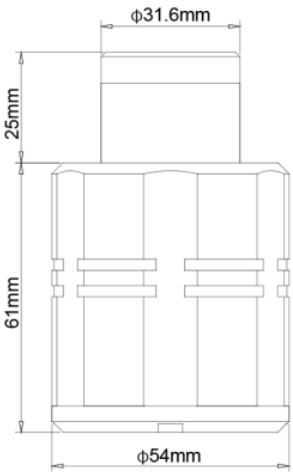

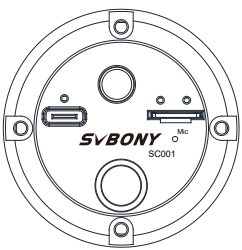

APP interface introduction

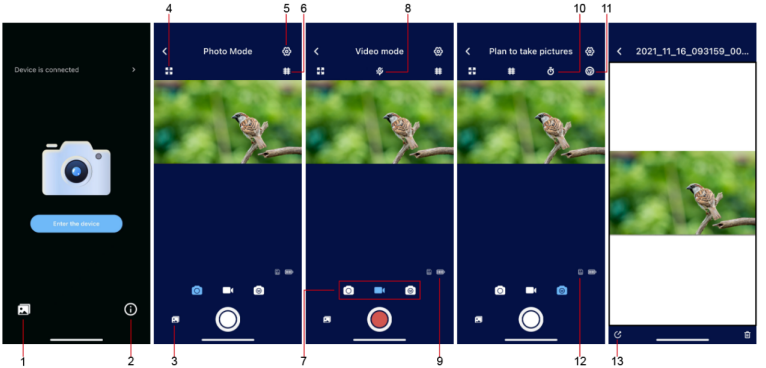

1.Local album button
2.Software information button
3.Device album button
4.Full screen button
5.Software parameter setting button(Can be set to "vertical flip", "horizontal flip", "flash mode", "format TF card", "restore factory settings")
6.Grid guide button
7.Mode selection (modeCapture, modeVideo, modeLapseTimeCapture) button
8.Microphone switch button (modeVideo)
9.Device battery level display
10.Scheduled shooting interval selection button (modeLapseTimeCapture)
11.Selection button for the planned number of shots (modeLapseTimeCapture)
12.Device TF card display
13.Share picture button (after opening a single picture in the local album, you can share it with friends or platforms)

APP download and installation

iPhone: Enter the App Store, search for Svbony Cam, click to download, and install it according to the default steps.
Android phone: Enter Google official store, search for Svbony Cam, click to download and install it according to the default steps.

Features of the product

1.1080P HD shooting
2.WiFi wireless connection, use freely
3.Outdoor bird watching and shooting, easy to carry
4.Landscape time-lapse photography function
5.All images and videos can be downloaded locally and shared in real time
6.1500mAh built-in battery, 3 hours working time

How to use

Notice for use

a)If you purchase a TF card, you must format it before using (the TF card that comes with the package has been formatted before leaving the factory);
b)The pictures in the device album are only previews. If you want to see the complete picture details, please download it to the local album first and then open it for viewing;
c)When recording video, the microphone function is turned off by default. If necessary, please press the microphone button in the APP to turn it on.

WiFi usage mode

1.Device preparation

Take out the device, connect the external antenna, and take off the lens cover. If the TF card is not installed, please install the TF card first, then connect it in the correct direction and fix it on your spotting scope or other external equipment and make sure that it is firmly fixed.

2. Establish a connection with the device

2.1 Android phones: Press the power button to turn on the device, open the installed app in the phone, and enter the main interface of the app. Click "Device is not connected" at the top of the main interface of the APP to enter the Wi-Fi selection list, select SC001-XXXXXX (X represents a different serial number for each device), then enter the password "12345678" in the pop-up prompt box and click to connect. When the connected WiFi name in the WiFi list shows SC001-XXXXXX (there will be "No Internet access", this is normal), it means that the device is connected successfully.

2.2 iPhone: Press the power button to turn on the device, open the installed app in the phone, and enter the main interface of the app. Click "Device is not connected" at the top of the main interface of the app to enter the permission settings, then click the return arrow in the upper left corner to enter the Wi-Fi selection list and select SC001-XXXXXX (X means different serial number for each device). After that, enter the password "12345678" in the pop-up prompt box and click to connect. When the connected WiFi name in the WiFi list shows SC001-XXXXXX (there will be "No Internet access", this is normal), it means that the device is connected successfully.

3.Return to the main interface of the APP, click "Enter Device" to see the image and you can use it normally.

Notice:a) If the purchased TF card is used for the first time, you should enter the setting options first, format the TF card, and prepare for the subsequent shooting and storage of images;

b) Please shut down the device before inserting or pulling out the TF card;

c) Please allow the APP to access the local photo album in your phone. The program will automatically create a new photo album named "Svbony Camera" in your local photo album to store the images that you downloaded from the device photo album to the local photo album.

d) If the image is not clear, please adjust the focus of the external device until the image is clear.

UVC mode use

1.Take out the device, connect the external antenna, remove the lens cap, install the TF card, and connect your spotting scope or other external devices;

2.Use the built-in data cable, connect the Type-C port to the device, and connect the USB port to the PC;

3.Open the UVC mode software on the PC (Amcap software can be used), select UVC CAMERA, and enter the image interface.

Note: In the process of using WIFI mode, after switching to UVC mode, the device will automatically default to UVC mode. If you want to return to WIFI mode, you need to unplug the data cable connection and then reconnect the device to return to WIFI mode.

Guide to time-lapse photography

1.On the main interface, press the planned photo button to switch to the planned photo mode;

2.Click the icon in the upper right corner of the interface Choose the number of photos that you plan to take(50, 100, 200 is available);

3.Click on the icon Select the time interval of each shot（3 seconds, 5 seconds, 10 seconds is available);

4.After the above settings are selected, return to the main interface and press the camera button. The device will automatically take pictures at a fixed time according to the selected time and the interval between photos until the selected number of photos has been taken;

5.Export the taken pictures, through the video synthesis software, you can make time-lapse photography videos.

Indicator and operating conditions

Operating conditions	Light indicator
Turn on (Press the power button for 5 seconds and then release it)	Blue light is on
Shut down (Press the power button for 5 seconds and then release it)	Blue light off
External power supply (via mobile power or PC, etc.)	Red light is on
Fully charged battery	Red light off
Preview and take pictures (plan to take pictures)	Blue light is on
Shoot video	Blue light flashing

General Clean

Svbony SC001 camera comes with an optical protection window – IR650 glass, which can protect the sensor from dust and humidity. And the inside of the image sensor is dry and sealed.
We don't recommend customer to disassemble the camera and clean it. Because disassemble the camera may lead the sensor to get wet, or it may cause more dust to come in. If you need to clean the protection window, it is best to do it during the daytime.
Note: The recommended cleaning method is to try to blow them away with a manual air pump.

Quality Assurance

The SC001 camera warranty time is one year. Within warranty period, if the camera fails to function, we will provide free after-sales maintenance service. Besides the warranty days, we provide life-long maintenance services and charge only the parts that need repair or replacement. The buyer will pay for the postage of returning camera to factory for repairs. Within the warranty period, if the following condition occurs, certain maintenance costs will be charged.
1, The malfunction and damaged caused by incorrect use, the unauthorized repairs and alteration.
2, The damage caused by fire, flood, earthquake, other natural disasters and secondary product damage.
3, The product malfunction caused by the fall and transportation failures after purchase.
4, The malfunction and damaged caused by the other barriers (man-made factors or external device).
5, Purchase without the warranty card and purchase invoices.

Specifications

WiFi module	2.4G,150Mbps
Storage	TF card, maximum support 128G, standard configuration 32G
Built-in battery	1500mah
Resolution	1920*1080
Effective pixels	2 million pixels
Shutter type	Electronic rolling shutter
Picture format	JPG
Working temperature	-10°--+50°
Storage temperature	-20°--+60°
Working humidity	20% RH-80% RH
Storage humidity	20% RH-95% RH
Working current	＜1.0A
Standby current	＜30MA
Charging voltage	5V
Protective window optical glass	IR CUT coated glass
Back intercept	12.5/17.5mm

Packing details

Number	Package content	Quantity
1	Camera	1
2	External antenna	1
3	USB data cable	1
4	1.25-inch Extension Tube	1
5	CS-C adapter ring	1
6	TF card	1
7	Clean cloth	1
8	Dust cover	1
9	Manual	1
10	Packing box	1

ATTENTION!	Before using this device, read this guide which contains important operating instructions for safe usage and control for compliance with applicable standards and regulations.

FCC Requirements:

•Products authorized under Part 15 using SDoC or Certification require a label containing one of the following compliance statements

NOTE: This equipment has been tested and found to comply with the limits for a Class B digital device, pursuant to part 15 of the FCC Rules. These limits are designed to provide reasonable protection against harmful interference in a residential installation. This equipment generates, uses and can radiate radio frequency energy and, if not installed and used in accordance with the instructions, may cause harmful interference to radio communications. However, there is no guarantee that interference will not occur in a particular installation. If this equipment does cause harmful interference to radio or television reception, which can be determined by turning the equipment off and on, the user is encouraged to try to correct the interference by one or more of the following measures:

—Reorient or relocate the receiving antenna.

—Increase the separation between the equipment and receiver.

—Connect the equipment into an outlet on a circuit different from that to which the receiver is connected.

—Consult the dealer or an experienced radio/ TV technician for help.

•This device complies with part 15 of the FCC Rules. Operation is subject to the following two conditions:
(1) This device may not cause harmful interference, and
(2) this device must accept any interference received, including interference that may cause undesired operation.

Any Changes or modifications not expressly approved by the party responsible for compliance could void the user's authority to operate the equipment.
This transmitter must not be co-located or operating in conjunction with any other antenna or transmitter.
This equipment complies with FCC radiation exposure limits set forth for an uncontrolled environment. This equipment should be installed and operated with minimum distance 20cm between the radiator & your body.

CE Requirements:

•(Simple EU declaration of conformity) Hong Kong Svbony Technology Co.,Ltd declares that the equipment type is in compliance with the essential requirements and other relevant provisions of RED Directive 2014/30/EU and the ROHS Directive 2011/65/EU and the WEEE Directive 2012/19/EU; the full text of the EU declaration of conformity is available at the following internet address: www.svbony.com.

•Disposal

The crossed-out wheeled-bin symbol on your product, literature, or packaging reminds you that in the European Union, all electrical and electronic products, batteries, and accumulators (rechargeable batteries) must be taken to designated collection locations at the end of their working life. Do not dispose of these products as unsorted municipal waste. Dispose of them according to the laws in your area.

Avoid Choking Hazard

Small Parts. Not for children under 3 years.

Approved Accessories

•This item meets the regulatory standards when used with the Svbony accessories supplied or designated for the product.

•For a list of Svbony-approved accessories for your item, visit the following website: http://www.Svbony.com

Warranty Card	
Product Model	
Purchasing Date	
Defect Reason	
Dealer Name	
Telephone	
User’s Name	
User’s Address	
User’s Email	

Remarks:

1. This guarantee card should be kept by the user, no replacement if lost.
2. Most new products carry a one-year manufacturer’s warranty from the date of purchase.
3. The user can get warranty and after-sales service as below:
• Contact the seller where you buy.
4. For warranty service, you will need to provide a receipt proof of purchase from the actual seller for verification

Exclusions from Warranty Coverage:

1. To any product damaged by accident.
2. In the event of misuse or abuse of the product or as a result of unauthorized alterations or repairs.
3. If the serial number has been altered, defaced, or removed.

Hong Kong Svbony Technology Co.,Ltd
Add: Unit B, 5th Floor, Gallo Commercial Building, 114-118
Lockhart Road, Wanchai, Hong Kong
Facebook: facebook.com/svbony
E-mail: info@svbony.com
Web: www.svbony.com

MADE IN CHINA

说明书要求

尺寸：120*150mm

印刷：黑白印刷

装订：胶合钉

纸张材质：双胶纸

本页无需印刷