RETEKESS

Wireless Calling System
User Manual

TH103

Product introduction

Thank you for using Retekess calling System.In order to be better to use the product, please read this operation instruction carefully.

IInstall the receiver in the right location, and when someone needs help,just press the call button or pull the rope on the pager,the receiver will be flicker and siren.

This is widely used in hospital, old folk's home and so on.

Diagram

Receiver

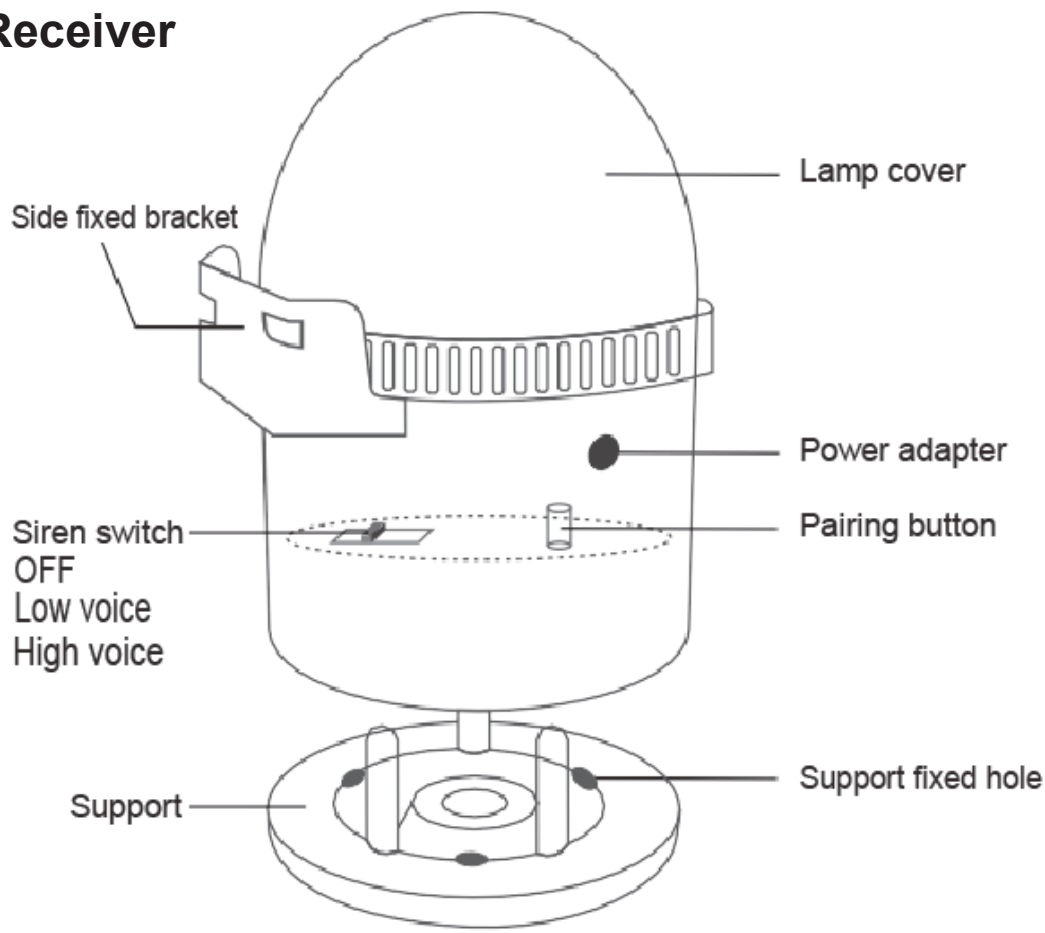

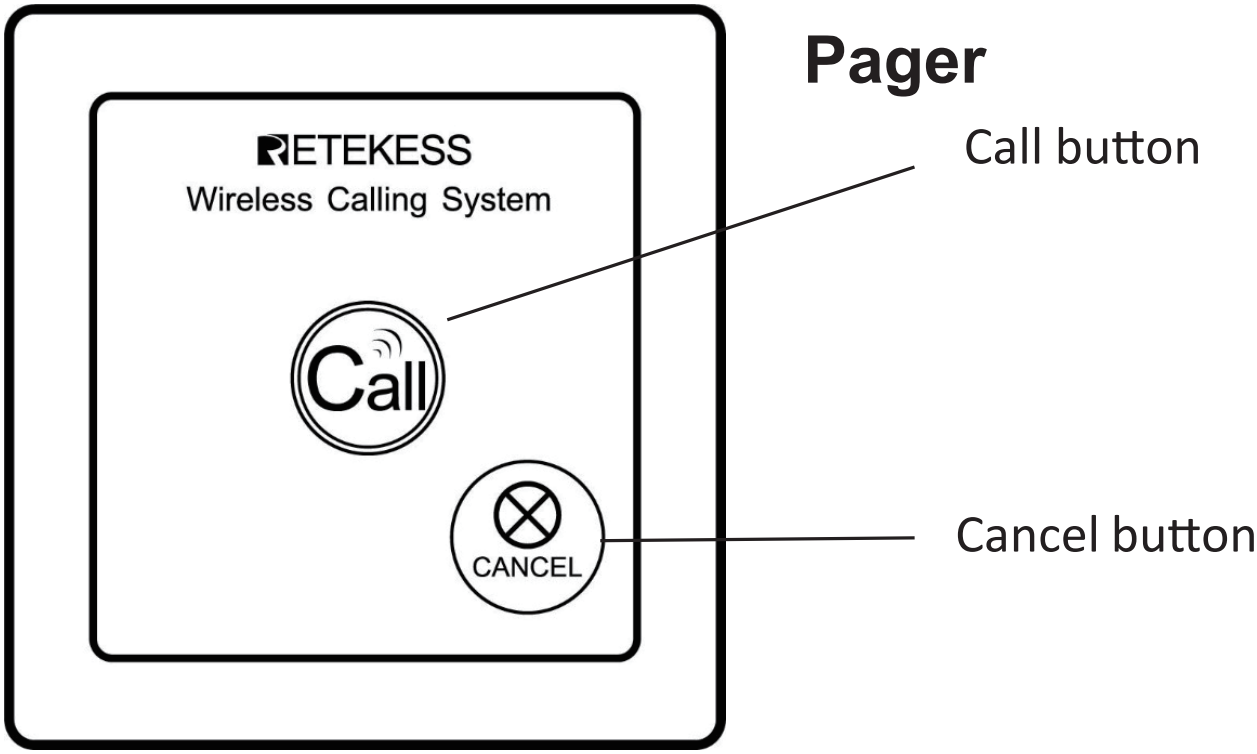

Parameter

Pager		Receiver	
Working voltage	DC6V	Input Power	DC12V1A
Working current	12mA	Sensitivity	>103dBm
Working frequency	433.92 MHz	Working current	138mA±10mA
Transmit power	-47.56dBm	Standby current	≤10mA±2mA
Battery specification	CR2032*2	Volume	> 100dB
Modulation Type	OOK		

Packing List

Number	Name	Quantity
1	Pager	1
2	Receiver	1
3	Power adaptor	1
4	Screw	3
5	User manual	1
6	Back glue	2

Installation

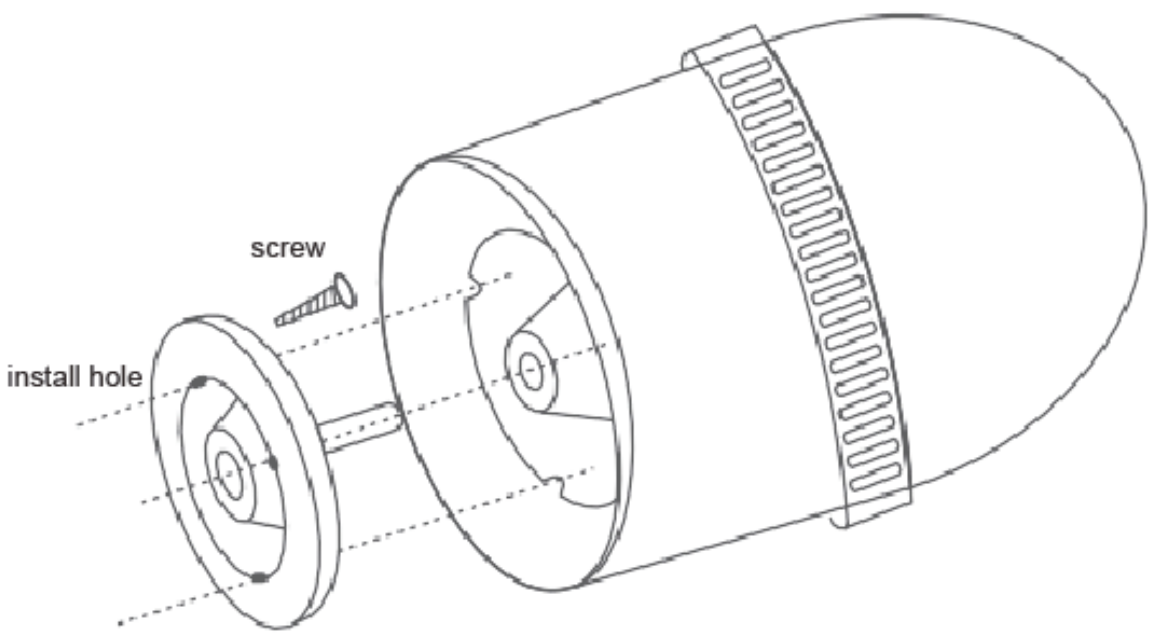

Fix the bottom support to the wall first, then install the unit to support.....

Function

1.Press Call button or pull the rope on the pager, the red light flicker with alarm voice on the receiver.The voice can be turn off or adjust to lower by the internal switch.
2.Press Cancel button on the pager, the light off and the voice stop on the receiver.

Pairing

1.Screw down the red cover on the receiver, there is pairing button the board. Press the button, the red indicator on, then press any button on the pager, the LED indicator flicker twice on the receiver, that means the pager has been paired to the receiver successful.
2.Press and hold on the pairing button for 5s, all the paired call buttons will be deleted.

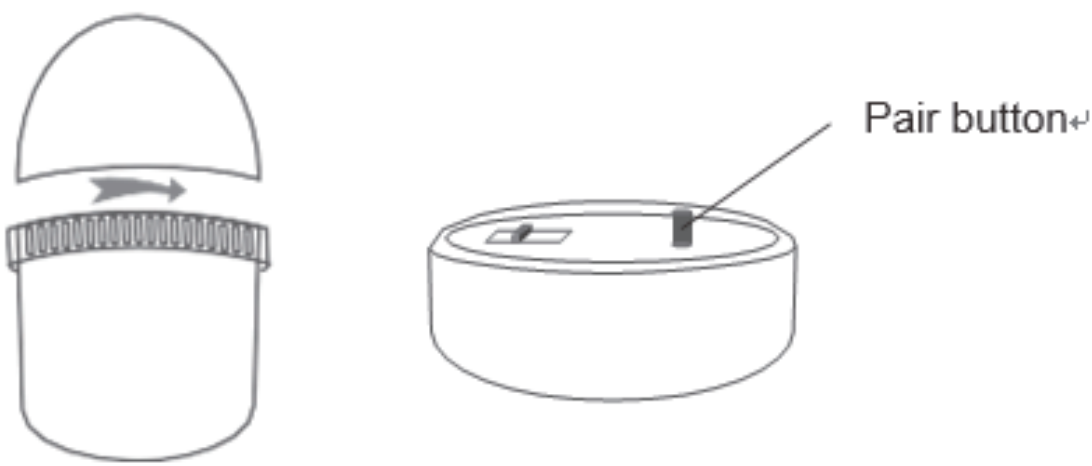

Precautions

RF ENERGY EXPOSURE AND PRODUCT SAFETY GUIDE

ATTENTION!	Before using this radio, read this guide which contains important operating instructions for safe usage and RF energy awareness and control for compliance with applicable standards and regulations.

This radio uses electromagnetic energy in the radio frequency (RF) spectrum to provide communications between two or more users over a distance.
RF energy, which when used improperly, can cause biological damage.
All Retekess radios are designed, manufactured, and tested to ensure they meet governmentestablished RF exposure levels. In addition, manufacturers also recommend specific operating instructions to users of the radios. These instructions are important because they inform users about RF energy exposure and provide simple procedures on how to control it. Please refer to the following websites for more information on what RF energy exposure is and how to control your exposure to assure compliance with established RF exposure limits: http://www.who.int/en/

Local Government Regulations

When radios are used as a consequence of employment, the Local Government Regulations requires users to be fully aware of and able to control their exposure to meet occupational requirements. Exposure awareness can be facilitated by the use of a product label directing users to specific user awareness information. Your Retekess radio has a RF Exposure Product Label. Also, your Retekess

user manual, or separate safety booklet includes information and operating instructions required to control your RF exposure and to satisfy compliance requirements.

Radio License (if appropriate)

Governments keep the radios in classification, business radios operate on radio frequencies that are regulated by the local radio management departments (FCC, ISED, OFCOM, ANFR, BFTK, Bundesnetzagentur...).To transmit on these frequencies, you are required to have a license issued by them.
The detailed classification and the use of your radios, please contact the local government radio management departments.
Use of this radio outside the country where it was intended to be distributed is subject to government regulations and may be prohibited.

Unauthorized modification and adjustment

Changes or modifications not expressly approved by the party responsible for compliance may void the user's authority granted by the local government radio management departments to operate this radio and should not be made. To comply with the corresponding requirements, transmitter adjustments should be made only by or under the supervision of a person certified as technically qualified to perform transmitter maintenance and repairs in the private land mobile and fixed services as certified by an organization representative of the user of those services.
Replacement of any transmitter component (crystal, semiconductor, etc.) not authorized by the local government radio management departments equipment authorization for this radio could violate the rules.

FCC Requirements:

• This device complies with part 15 of the FCC Rules. Operation is subject to the following two conditions:

1) This device may not cause harmful interference, and
2) this device must accept any interference received, including interference that may cause undesired operation.

• This equipment has been tested and found to comply with the limits for a Class B digital device,pursuant to Part 15 of the FCC Rules. These limits are designed to provide reasonable protection against harmful interference in a residential installation.

This equipment generates uses and can radiate radio frequency energy and, if not installed and used in accordance with the instructions, may cause harmful interference to radio communications. However, there is no guarantee that interference will not occur in a particular installation. If this equipment does cause harmful interference to radio or television reception, which can be determined by turning.

Precautions

the equipment off and on, the user is encouraged to try to correct the interference by one or more of the following measures:

- Reorient or relocate the receiving antenna.
- Increase the separation between the equipment and receiver.
- Connect the equipment into an outlet on a circuit different from that to which the receiver is connected.
- Consult the dealer or an experienced radio/TV technician for help.

CE Requirements:

- (Simple EU declaration of conformity) Henan Eshow Electronic Commerce Co.,Ltd declares that the radio equipment type is in compliance with the essential requirements and other relevant provisions of RED Directive 2014/53/EU and the ROHS Directive 2011/65/EU and the WEEE Directive 2012/19/EU; the full text of the EU declaration of conformity is available at the following internet address: www.retekess.com.
- Disposal

  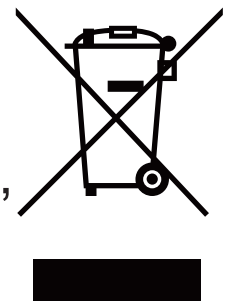

  The crossed-out wheeled-bin symbol on your product, literature, or packaging reminds you that in the European Union, all electrical and electronic products, batteries, and accumulators (rechargeable batteries) must be taken to designated collection locations at the end of their working life. Do not dispose of these products as unsorted municipal waste. Dispose of them according to the laws in your area.

IC Requirements:

Licence-exempt radio apparatus

This device contains licence-exempt transmitter(s)/receiver(s) that comply with Innovation, Science and Economic Development Canada's licence-exempt RSS(s). Operation is subject to the following two conditions:

1) This device may not cause interference.

2) This device must accept any interference, including interference that may cause undesired operation of the device.

Le présent appareil est conforme aux CNR d'Industrie Canada applicables aux appareils radio exempts de licence. L'exploitation est autorisée aux deux conditions suivantes :

1) l'appareil ne doit pas produire de brouillage;
2) l'utilisateur de l'appareil doit accepter tout brouillage radioélectrique subi, même si le brouillageest susceptible d'en compromettre le fonctionnement.

RF Exposure Information

- DO NOT operate the radio without a proper antenna attached, as this may damage the radio and may also cause you to exceed RF exposure limits. A proper antenna is the antenna supplied with this radio by the manufacturer or an antenna specifically authorized by the manufacturer for use with this radio, and the antenna gain shall not exceed the specified gain by the manufacturer declared.
- DO NOT transmit for more than 50% of total radio use time, more than 50% of the time can cause RF exposure compliance requirements to be exceeded.
- During transmissions, your radio generates RF energy that can possibly cause interference with other devices or systems. To avoid such interference, turn off the radio in areas where signs are posted to do so.

- The device complies with RF specifications when the device used at 5mm from your body. Third-party beltclips, holsters, and similar accessories used by this device should not contain any metallic components. Body-worn accessories that do not meet these requirements may not comply with RF exposure requirements and should be avoided.
- DO NOT operate the transmitter in areas that are sensitive to electromagnetic radiation such as hospitals, aircraft, and blasting sites.

Avoid Choking Hazard

Small Parts. Not for children under 3 years.

Precautions

Protect your hearing:

- Use the lowest volume necessary to do your job.
- Turn up the volume only if you are in noisy surroundings.
- Turn down the volume before adding headset or earpiece.
- Limit the amount of time you use headsets or earpieces at high volume.
- When using the radio without a headset or earpiece, do not place the radio's speaker directly against your ear

• Use careful with the earphone maybe possible excessive sound pressure from earphones and headphones can cause hearing loss.

Note: Exposure to loud noises from any source for extended periods of time may temporarily or permanently affect your hearing. The louder the radio's volume, the less time is required before your hearing could be affected. Hearing damage from loud noise is sometimes undetectable at first and can have a cumulative effect.

Avoid Burns

Antennas

• Do not use any portable radio that has a damaged antenna. If a damaged antenncomes into contact with the skin when the radio is in use, a minor burn can result.

Batteries (If appropriate)

• When the conductive material such as jewelry, keys or chains touch exposed terminals of the batteries, may complete an electrical circuit (short circuit the battery) and become hot to cause bodily injury such as burns. Exercise care in handling any battery, particularly when placing it inside a pocket, purse or other container with metal objects

Long transmission

• When the transceiver is used for long

transmissions, the radiator and chassis will become hot.

Safety Operation

Forbid

- Do not use charger outdoors or in moist environments, use only in dry locations/conditions.
- Do not disassemble the charger, that may result in risk of electrical shock or fire.
- Do not operate the charger if it has been broken or damaged in any way.
- Do not place a portable radio in the area over an air bag or in the air bag deploymentarea. The radio may be propelled with great force and cause serious injury to occupants of the vehicle when the air bag inflates.

To reduce risk

- Pull by the plug rather than the cord when disconnecting the charger.
- Unplug the charger from the AC outlet before attempting any maintenance or cleaning.
- Contact Retekess for assistance regarding repairs and service.
- The adapter shall be installed near the equipment and shall be easily accessible
- Risk of explosion if battery is replaced by an incorrect type. Dispose of used batteries according to the instructions.

- Adapter shall be installed near the equipment and shall be easily accessible.
- The plug considered as disconnect device of adapter.
- The operating temperature of the EUT can't exceed the specified range.

Approved Accessories

- This radio meets the RF exposure guidelines when used with the Retekess accessories supplied or designated for the product. Use of other accessories may not ensure compliance with the RF exposure guidelines and may violate regulations.
- For a list of Retekess-approved accessories for your radio model, visit the following website: http://www.Retekess.com.

EU Importer: Germany Retevis Technology GmbH
Address: Uetzenacker 29,38176 wendeburg

FCC Statement

This equipment has been tested and found to comply with the limits for a Class B digital device, pursuant to part 15 of the FCC Rules. These limits are designed to provide reasonable protection against harmful interference in a residential installation. This equipment generates, uses and can radiate radio frequency energy and, if not installed and used in accordance with the instructions, may cause harmful interference to radio communications. However, there is no guarantee that interference will not occur in a particular installation. If this equipment does cause harmful interference to radio or television reception, which can be determined by turning the equipment off and on, the user is encouraged to try to correct the interference by one or more of the following measures:

- Reorient or relocate the receiving antenna.
- Increase the separation between the equipment and receiver.
- Connect the equipment into an outlet on a circuit different from that to which the receiver is connected.
- Consult the dealer or an experienced radio/TV technician for help.

Caution: Any changes or modifications to this device not explicitly approved by manufacturer could void your authority to operate this equipment.
This device complies with part 15 of the FCC Rules. Operation is subject to the following two conditions: (1) This device may not cause harmful interference, and (2) this device must accept any interference received, including interference that may cause undesired operation.

Guarantee

Model Number: _____
Serial Number: _____
Purchasing Date: _____
Dealer: _____ Telephone: _____
User's Name: _____ Telephone: _____
Country: _____ Address: _____
Post Code: _____ Email: _____

Remarks:

1. This guarantee card should be kept by the user, no replament if lost.
2. Most new products carry a two-year manufacturer's warranty from the date of purchase.
3. The user can get warranty and after-sales service as below:
   - Contact the seller where you buy.
   - Products Repaired by Our Local Repair Center
4. For warranty service, you will need to provide a receipt proof of purchase from the actual seller for verification

Exclusions from Warranty Coverage:

1. To any product damaged by accident.
2. In the event of misuse or abuse of the product or as a result of unauthorized alterations or repairs.
3. If the serial number has been altered, defaced, or removed.

MADE IN CHINA

Henan Eshow Electronic Commerce Co., Ltd.
Add: 7/F, Sanjiang Building, No.170 Nanyang Road,
Huiji District, Zhengzhou, Henan, China
Facebook: facebook.com/Retekess
E-mail: support@retekess.com
Web: www.retekess.com