122 Ross Street, CB13BU
Cambridge, United Kingdom
www.iot747.com

# IDC7 Bluetooth Module
# Model: IDC747



**Device description**
- Bluetooth 5.2 Audio and Data Module
- UART/USB/GPIO Command
- 11.8mmx18mmx3.2mm form Factor
- Simultaneous Low Energy/Classic Bluetooth
- Connect to Apps (iOS/Android/etc.)

**Applications**
- High-End Audio Visual-Products
- Industrial Data/Audio Applications
- Automotive/Aerospace Applications
- Teleconference Equipment
- POS/Retail Sports/Leisure Equipment

**Features**
- Audio and High-Speed Data Bluetooth 5.2 Module
- Simultaneous Classic and Low Energy Bluetooth
- Multiple Simultaneous Connections and Profiles
- Profiles Supported: HFP, A2DP, AVRCP, SPP, BLE
- Analog and Digital Audio connection (I2S, PCM)
- Simple UART, USB or GPIO interface for control
- Small form factor (11.8mm x 18mm x 3.2mm)
- Bluetooth, FCC and CE certified

**Summary**
IDC747 is ideal for developers who want to quickly and cost effectively integrate high performance Audio and Data Bluetooth functionality into their products. It is controlled through a simple UART or USB interface that also serves for data transmissions. For the Audio, it has Analog or Digital Outputs. The module can connect to multiple devices with multiple profiles. The power consumption is <1mAmp when connected, <1mAmp in Pairing mode and <6mAmp when streaming music at 3.3V. It is supplied FCC, CE and Bluetooth 5.2 certified. It is also supplied with sample Android and iOS Applications to help integrate the Bluetooth functionality with the product end Application. IDC747-1 features can be also customised for specific complex use cases and scenarios. Please contact info@iot747.com for customisation requests.

**For additional questions or to submit technical question, go to www.iot747.com or send an email to info@iot747.com.**


Copyright IOT747

# Contents

General Specifications ..... 3
Footprint ..... 4
Pinout ..... 5
Hardware Design Guidelines ..... 7
- Fixed Voltage Supply Configuration ..... 7
- Battery Voltage Supply Configuration ..... 8
- Module Boot Modes ..... 8
- ESD protection ..... 9
- GPIOs and UART ..... 10

Audio Circuit ..... 11
- Connecting Microphones ..... 11
- Connecting Speakers ..... 12
- External Amplifier Support ..... 12
- USB supply configuration: ..... 12

Solder Reflow Profile ..... 17
Regulatory Certifications ..... 18
- United States - FCC ..... 18
- Europe - CE and RoHS Marking ..... 19

Ordering Information ..... 21
Packaging ..... 22
General Notes ..... 23
Change Log ..... 24

# General Specifications

| No | Pin Name |
|---|---|
| Bluetooth Standard | Bluetooth 5.2 |
| Interfaces | UART, AIO,GPIO,USB,PCM, I2S,I2C |
| Size | 11.8mm x 18mm x 3.2mm |
| Weight | 1g |
| Frequency Band | 2,402 MHz to 2,480 MHz |
| Modulation | 8 DPSK, PI/4 DQPSK, GFSK |
| Maximum Data Rate | 3Mbps (typical 1.6Mbps) |
| Operating Range | 15m to 20m |
| RF Sensitivity | 0.1% BER at -96dBm (Typical) |
| Transmit Power | Max 13dBm |
| DAC resolution | 16 bits |
| DAC Out Sample Rate | 8 KHz to 90 KHz |
| DAC SNR | Class D typ: 99.3dBA, Class A-B typ: 100.9 dBA |
| Stereo Separation | Min: 80dB |
| Supply Voltage | 3.3V to 4.7 V DC (Supports Li Ion battery voltage range) |
| Typical Current | 6mA (Music streaming) |
| Typical Current Idle | <1mA (Connectable) |
| Typical Current Discoverable | <1mA (Pairing Mode) |
| Operating Temperature | -40°C to 85°C |
| Storage Temperature | -40°C to 105°C |


Copyright IOT747

# Footprint

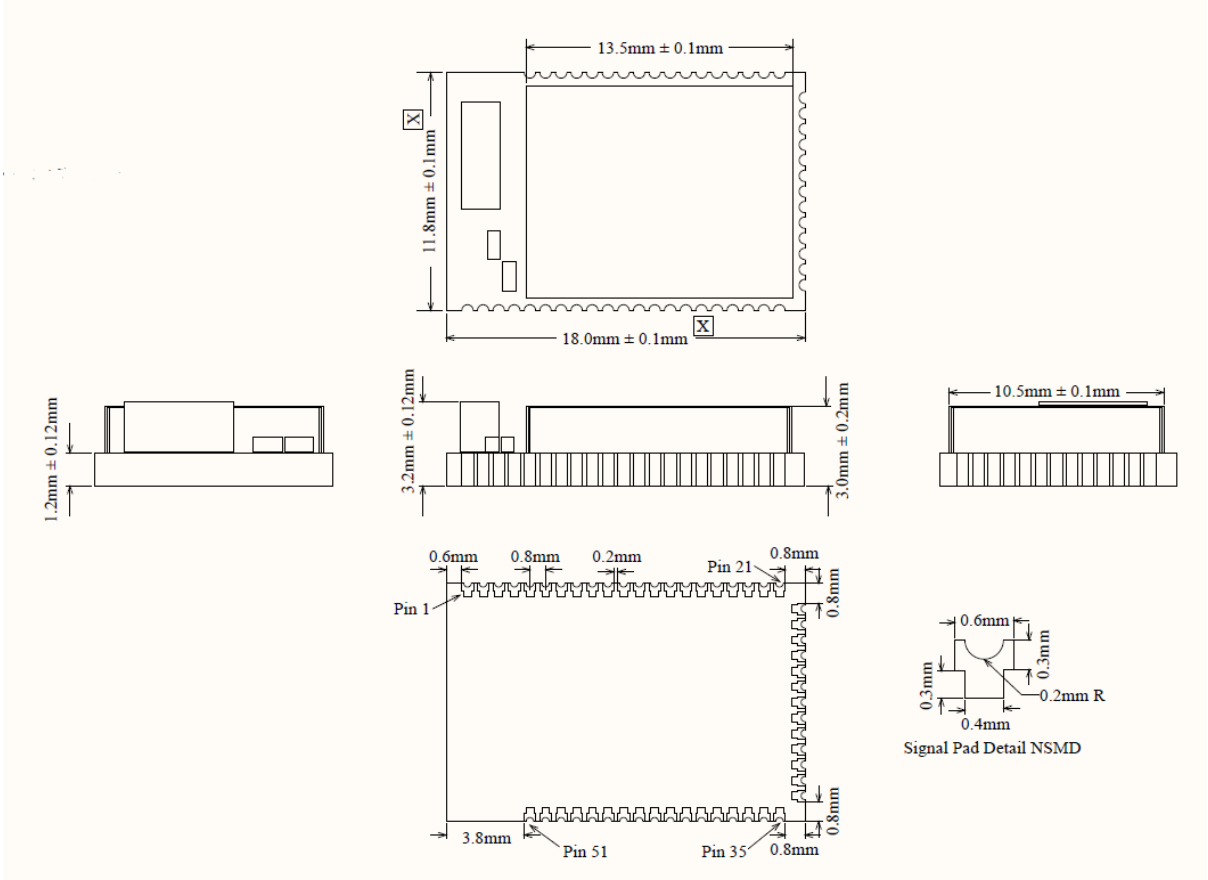
13.5mm ± 0.1mm
11.8mm ± 0.1mm
X
18.0mm ± 0.1mm
X
1.2mm ± 0.12mm
3.2mm ± 0.12mm
3.0mm ± 0.2mm
10.5mm ± 0.1mm
0.6mm
0.8mm
0.2mm
Pin 21
0.8mm
Pin 1
0.8mm
0.6mm
0.3mm
0.3mm
0.2mm R
0.4mm
Signal Pad Detail NSMD
3.8mm
Pin 51
Pin 35
0.8mm
0.8mm

# Pinout

| No | Pin Name | Pin Type | Pin Description |
|---|---|---|---|
| 1 | GND | GND | Common Ground |
| 2 | GND | GND | Common Ground |
| 3 | GND | GND | Common Ground |
| 4 | GND | GND | Common Ground |
| 5 | PIO_21 | Bi-directional | Programmable input/output line |
| 6 | PIO_20 | Bi-directional | Programmable input/output line |
| 7 | PIO_10 | Bi-directional | Programmable input/output line |
| 8 | PIO_60 | Bi-directional | Programmable input/output line |
| 9 | PIO_9 | Bi-directional | Programmable input/output line |
| 10 | PIO_4 | Bi-directional | Programmable input/output line |
| 11 | GND | GND | Common Ground |
| 12 | AIO_1 | Bi-directional | Analog programmable input/output line |
| 13 | SPKR_LN | Audio output | Speaker output negative, left |
| 14 | SPKR_LP | Audio output | Speaker output positive, left |
| 15 | SPKR_RN | Audio output | Speaker output negative, right |
| 16 | SPKR_RP | Audio output | Speaker output positive, right |
| 17 | MIC_BIAS_A | Analog input | Microphone bias |
| 18 | MIC_RN | Analog input | Microphone input negative, right |
| 19 | MIC_RP | Analog input | Microphone input positive, right |
| 20 | MIC_LN | Analog input | Microphone input negative, left |
| 21 | MIC_LP | Analog input | Microphone input positive, left |
| 22 | GND | GND | Common Ground |
| 23 | PIO_3 | Bi-directional | Programmable input/output line |
| 24 | PIO_8 | Bi-directional | Programmable input/output line |
| 25 | PIO_7 | Bi-directional | Programmable input/output line |
| 26 | PIO_5 | Bi-directional | Programmable input/output line |
| 27 | GND | GND | Common Ground |
| 28 | SYS_CTRL | Digital input | Take High to Boot Device |
| 29 | CHG_EXT | Charger input | External battery charger control |
| 30 | VCHG | Charger input | Battery Charger Input |
| 31 | VBAT_SENSE | Battery sense | Battery Charger Sense |
| 32 | VBAT | Battery terminal +ve | Battery Positive |
| 33 | VDD_PADS | Supply | Positive Supply input |
| 34 | VCHG_SENSE | Supply | Charger input sense pin |
| 35 | USB_N | Bi-directional | USB data negative |
| 36 | USB_P | Bi-directional | USB data positive |
| 37 | LED_2/AIO_2 | Bi-directional | LED Open Drain Driver / Analog/Digital |
| 38 | LED_4/AIO_4 | Bi-directional | LED Open Drain Driver / Analog/Digital |
| 39 | LED_5/AIO_5 | Bi-directional | LED Open Drain Driver / Analog/Digital |
| 40 | UART_CTS | Bi-directional | UART Clear to Send |
| 41 | UART_TX | Bi-directional | UART TX Data |

| No | Pin Name | Pin Type | Pin Description |
|---|---|---|---|
| 42 | UART_RX | Bi-directional | UART RX Data |
| 43 | UART_RTS | Bi-directional | UART request to send ,active low |
| 44 | RST# | Reset Input with Pull-Up | Reset if low for more than 5ms |
| 45 | LED_0/AIO_0 | Bi-directional | LED Open Drain Driver / Analog/Digital |
| 46 | PCM_SYNC | Bi-directional | Synchronous data sync |
| 47 | PCM_CLK | Bi-directional | Synchronous data clock |
| 48 | PCM_OUT | CMOS output | Synchronous data output |
| 49 | PCM_IN | CMOS input | Synchronous data input |
| 50 | PIO_2 | Bi-directional | Programmable input/output line |
| 51 | PIO_6 | Bi-directional | Programmable input/output line |

Notes:
PIO_X are bidirectional with weak pull down
Reset Input is with strong pull-up
USB data positive with selectable internal 1.5kΩ pull up resistor
UART are Bidirectional with weak pull up

# Hardware Design Guidelines

The IDC747 is typically powered by a fixed 3V supply where the module is included in a larger portable device and charging of the battery is supported by alternative functionality outside the remit of the IDC747. This is the Fixed Voltage Supply Configuration.

Alternatively, for portable applications, the module supports an internal charger function where no extra external components are required for charging operation. In this case, the main power is supplied by a battery, typically a Li Po cell with a nominal 3.1-3.3V supply. A 5V charger input, typically supplied by a USB source, is used to charge the battery. The IDC747 integrated Li-Ion charger is designed to support single Li-Ion cells with a wide range of cell capacities and variable $V_{FLOAT}$ voltages. It supports charge rates of 2mA to 200mA with no additional external components required. This is the Battery Voltage Supply Configuration.

## Fixed Voltage Supply Configuration

In the fixed voltage configuration, the pins VBAT, VBAT_SENSE and VDD_PADS are all connected to a single supply voltage rail. VCHG and VCHG_SENSE and CHG_EXT are left unconnected as per the figure below. Alternatively, we recommend connecting them to test points if possible. Test points can help debug and testing in some cases prior to production.

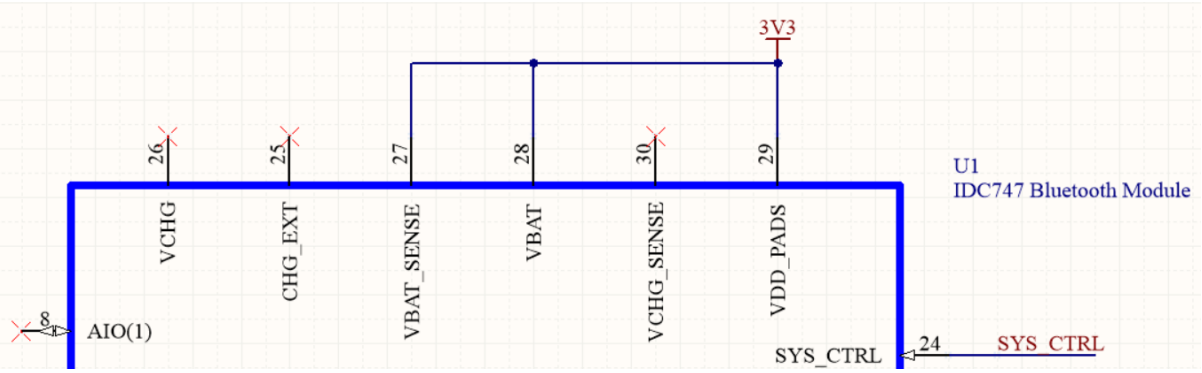


| Pin # | Pin Name | Connection | Voltage Input Range |
|---|---|---|---|
| 25 | CHG_EXT | Not Connected/Test Point | NA |
| 26 | VCHG | Not Connected/Test Point | NA |
| 27 | VBAT_SENSE | Connect to 3.3V Supply | 3.0V** to 4.6V |
| 28 | VBAT | Connect to 3.3V Supply | 3.0V** to 4.6V |
| 29 | VDD_PADS | Connect to 3.3V Supply | 1.7V to 3.6V |
| 30 | VCHG_SENSE | Not Connected/Test Point | NA |

** Devices operates down to 2.8V recommended software shut off is at 3.0V

## Battery Voltage Supply Configuration

In a battery sourced application VBAT and VBAT_SENSE are connected to the battery source, VDD_PADS is driven from a regulated supply external to the module, VCHG and VCHG_SENSE are connected to the charging input source as per the figure below.

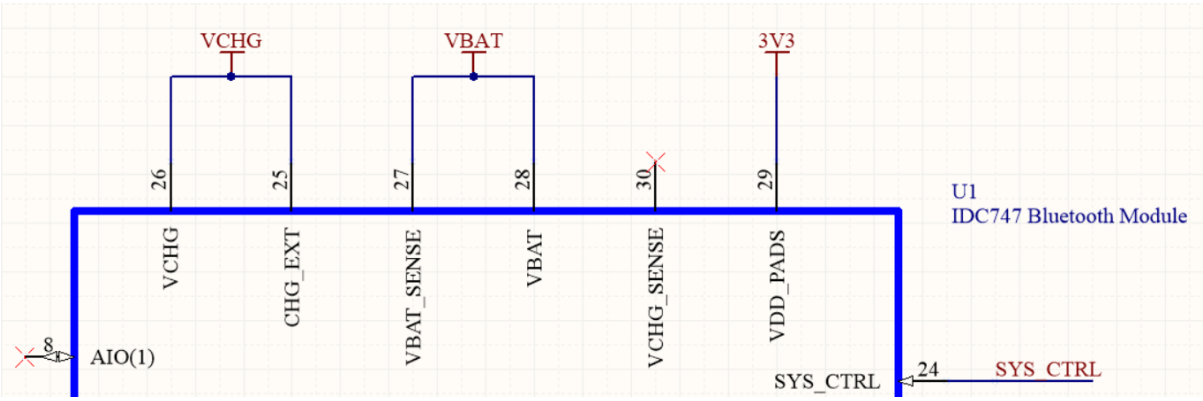


| Pin # | Pin Name | Connection | Voltage Input Range |
|---|---|---|---|
| 25 | CHG_EXT | Not Connected | |
| 26 | VCHG | Charger Source (VBUS) | 4.75V* to 6.5V |
| 27 | VBAT_SENSE | Connect to Battery | 3.0V** to 4.6V |
| 28 | VBAT | Connect to Battery | 3.0V** to 4.6V |
| 29 | VDD_PADS | Connect to regulated 3.3V Supply | 1.7V to 3.6V |
| 30 | VCHG_SENSE | Charger Source (VBUS) | NA |

* Can operate at a reduced capacity down to 4.0V, VCHG minimum is 4.0V
** Devices operates down to 2.8V recommended software shut off is at 3.0V

## Module Boot Modes

If the device is 'No Power' state (No voltage applied to the module), a connection (voltage applied) to VBAT or VCHG will transition the module from unpowered to Active.

The device can also be in 'Power Off' State while there is voltage applied to VBAT. The 'Power Off' state is different to the No Power state because the IDC747 has voltage on VBAT. In the 'Power Off' state the following events boot the chip and transition it to the Active state: (1) a rising edge on SYS_CTRL held high for 20 ms or (2) a rising edge on VCHG held high for 20 ms. NOTE that the device cannot be in 'Power Off' when voltage is present on VCHG input. The device can transition from Active to 'Power Off' with a UART command (See UART Manual) or a rising edge on SYS_CTRL.

SYS_CTRL is typically connected to an ON/OFF push button. If power is present from the battery and/or charger, and software has placed the device in the Power OFF mode, a long button press (SYS_CTRL held high for 20 ms) boots the device. Once the module is booted, SYS_CTRL acts like a standard PIO. The function of SYS_CTRL can be configured. Please refer to the UART Command Manual for the SYS_CTRL function once the module is booted.

To Wake-Up an external processor on Connection, PIOs can be used. With GPIO control disabled, PIOs will go High when a Bluetooth connection is established. Please refer to the UART command line manual for more details.

## ESD protection

The module has no supplementary ESD protection other than that provided by the IC within the module. The Bluetooth IC ESD protection is limited to:

Human Body Model Contact Discharge per ANSI/ESDA/JEDEC JS-001
Class 2 - 2kV (all pins except CHG_EXT; CHG_EXT rated at 1kV)

Machine Model Contact Discharge per JEDEC/EIA JESD22-A115
200V (all pins)

Charged Device Model Contact Discharge per JEDEC/EIA JESD22-C101
Class II - 200V (all pins)

It is recommended to adding supplementary ESD protection to externally available interfaces in the end application.

## GPIOs and UART

The module is controlled by GPIOs. This can be configured. If GPIO control is not used, these GPIOs should be left floating. The UART by default does not use RTS/CTS flow control. If the users do not expect to use it, these lines should be left floating.

### Digital Pin States on RESET or after Power Up

The following table shows the Digital Pin States on RESET or after power up.

| Pin Name / Group | I/O Type | State after PowerUp/RESET |
|---|---|---|
| USB_DP | Digital bi-directional | N/A |
| USB_DN | Digital bi-directional | N/A |
| UART_RX | Digital bi-directional with PU | Strong PU |
| UART_TX | Digital bi-directional with PU | Weak PU |
| UART_CTS | Digital bi-directional with PD | Weak PD |
| UART_RTS | Digital bi-directional with PU | Weak PU |
| PCM_IN | Digital bi-directional with PD | Weak PD |
| PCM_OUT | Digital bi-directional with PD | Weak PD |
| PCM_SYNC | Digital bi-directional with PD | Weak PD |
| PCM_CLK | Digital bi-directional with PD | Weak PD |
| RST# | Digital input with PU | Strong PU |
| PIO_X | Digital bi-directional with PD | Weak PD |

PD = Pull Down, PU = Pull Up

| Input and Tri-state Currents | Min | Typ | Max | Unit |
|---|---|---|---|---|
| Strong pull-up | -150 | -40 | -10 | µA |
| Strong pull-down | 10 | 40 | 150 | µA |
| Weak pull-up | -5 | -1.0 | -0.33 | µA |
| Weak pull-down | 0.33 | 1.0 | 5.0 | µA |

# Audio Circuit

## Connecting Microphones

Stereo Microphone example schematic.

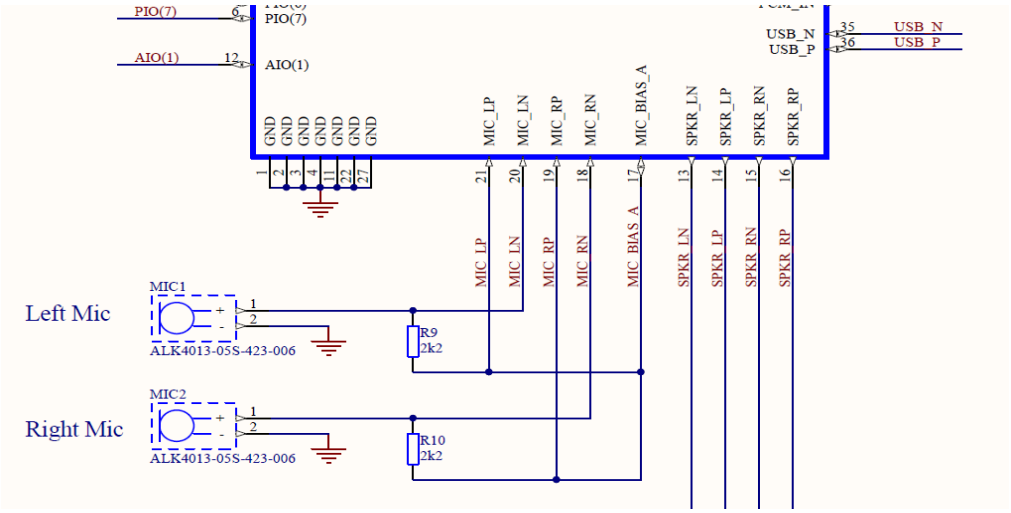


Mono Microphone example schematic.

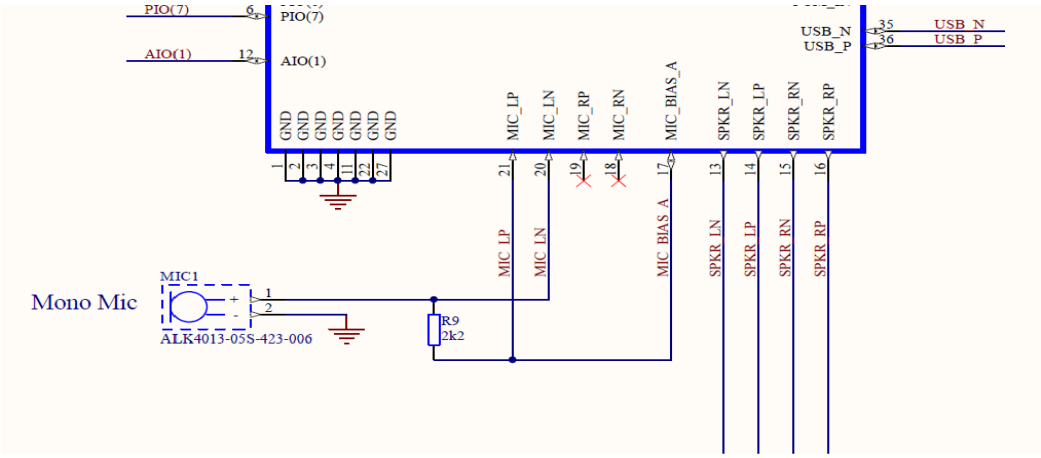


The Left Channel is used for Mono Operation. You can leave the right channel unconnected. For Dual Mono Operation the right channel forms the auxiliary channel, please connect as per stereo example schematic.

By default, Mic Bias will go High for a Hands-free and for a Music connection. The behaviour of Mic Bias can be configured. Please refer to UART manual for configuration options.

Mic Bias is 1.8V and can source up to 2.8mA of current. The Microphone input goes into a buffer stage so its input resistance is high.

## Connecting Speakers

The analogue output is not AC coupled. The analogue output circuit comprises a DAC, a buffer with gain-setting, a low-pass filter and a class AB output stage amplifier. The output is available as a differential signal between SPKR_LN and SPKR_LP for the left channel, and between SPKR_RN and SPKR_RP for the right channel. The amplifiers expect a load impedance of 16 to 32 Ohms. Peak voltage output depends on the gain setting though one should expect no more than a peak to peak voltage of 1.5V with a DC offset of around 1.2V at maximum gain.

## External Amplifier Support

The module is designed to provide direct speaker drive. In the case where higher Audio power is required, it can drive an external amplifier. On the module, a PIO (refer to UART Control Manual) goes High when an Audio Link is active. That PIO can be used for turning ON and OFF an external amplifier.

The Speaker outputs are DC coupled to the Bluetooth IC internal to the module. The speaker outputs are referenced to 1.8V. It is recommended connecting the module to an external amplifier in a differential configuration for enhanced noise immunity. In this configuration common mode noise is rejected by the amplifier configuration.

## USB supply configuration:

In many applications supply noise can significantly degrade audio performance. This is especially true in USB powered applications or where a USB source is used to charge a battery powered application. USB supplies vary significantly with noise levels and supply stability. In addition to steady state noise levels from USB supplies the plugging and unplugging of USB chargers can cause large supply transients that ripple through the supply chain to cause clicking and popping in the audio domain. It is recommended following good noise immunity pcb design practices, ground isolation, short residual current return paths and the use of ferrite bead and large decoupling capacitors on USB supply connections.

An example USB supply configuration is shown below.

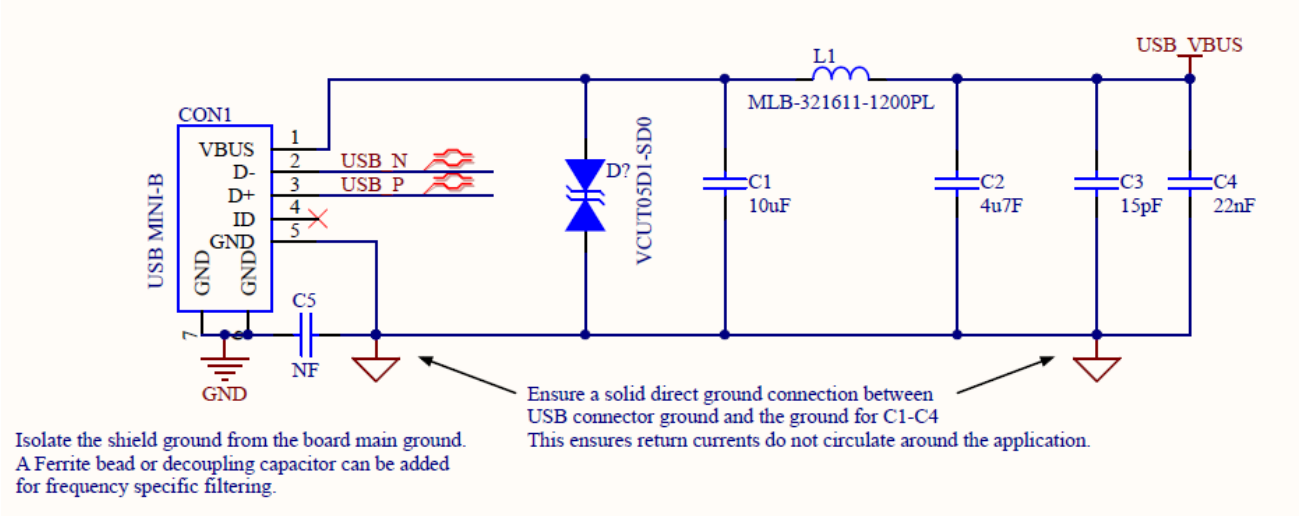


The Developer board uses an external Amplifier for audio application demonstration purposes. For superior audio performance always follow the design and layout guidelines provided by the amplifier manufacturer. Always use a high-quality audio amplifier ideally with click and pop suppression circuits built in. These amplifiers use noise suppression and soft start techniques to filter supply noise and transients as well as minimising ground loop currents and DC offsets that can cause degraded audio effects. Some amplifiers even employ ground sensing and suppression techniques to minimise and remove noise coupling to the audio path.

In the example amplifier circuit below the amplifier audio ground is connected to the main ground via a single “star” point at the audio output jack. This is suitable for connection to headphones where noise from an external source is not expected.

An example amplifier circuit suitable for connecting external headphones.

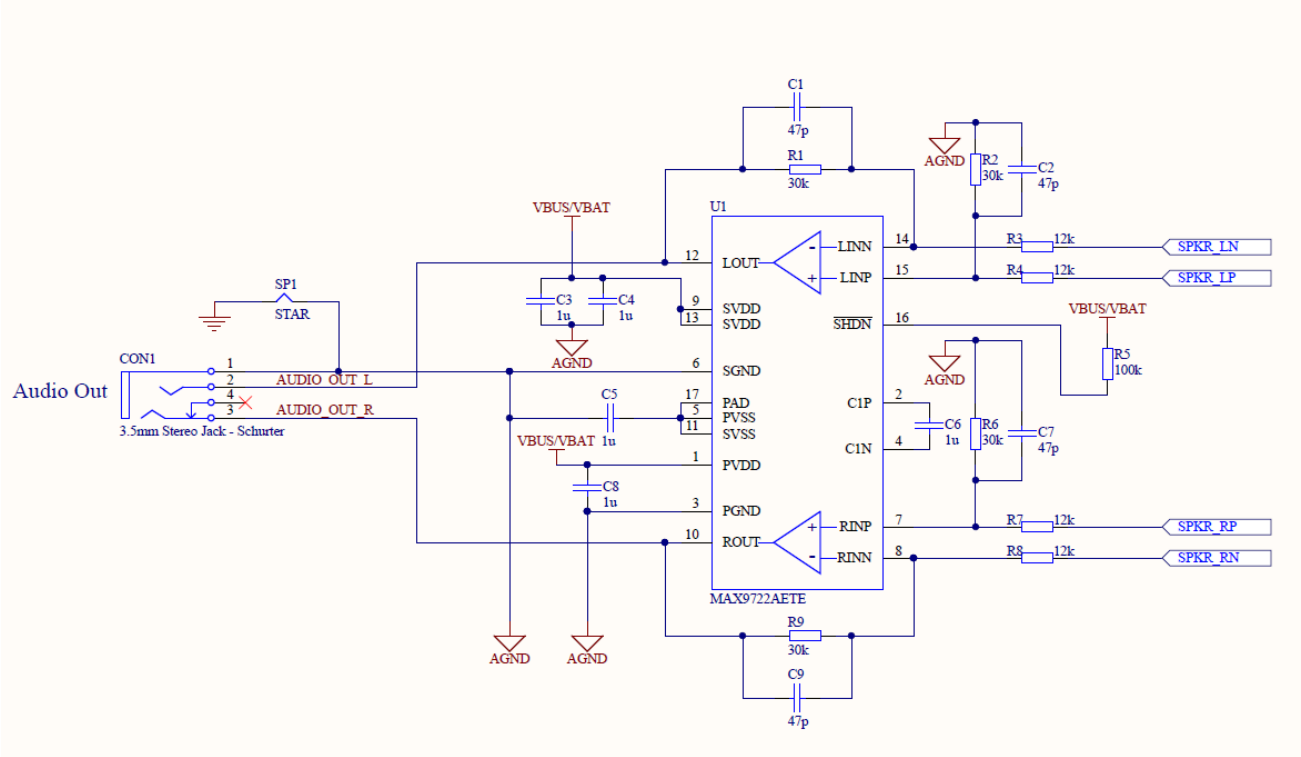


When connecting to external devices such as laptops in a “Line In” configuration there is a possibility that the sleeve of the audio cable can carry noise derived from the laptop. Also external devices connected through the audio cable sleeve can have different ground potentials which causes currents to flow through the sleeve ground. In this case it is important to isolate the sleeve ground from the audio amplifier to avoid the noise coupling to the amplifier and degrading the signal source. In this case add a filter circuit or ferrite bead connecting the sleeve ground to the ground on the application board as shown below.

Example of a filter circuit or a Ferrite bead:

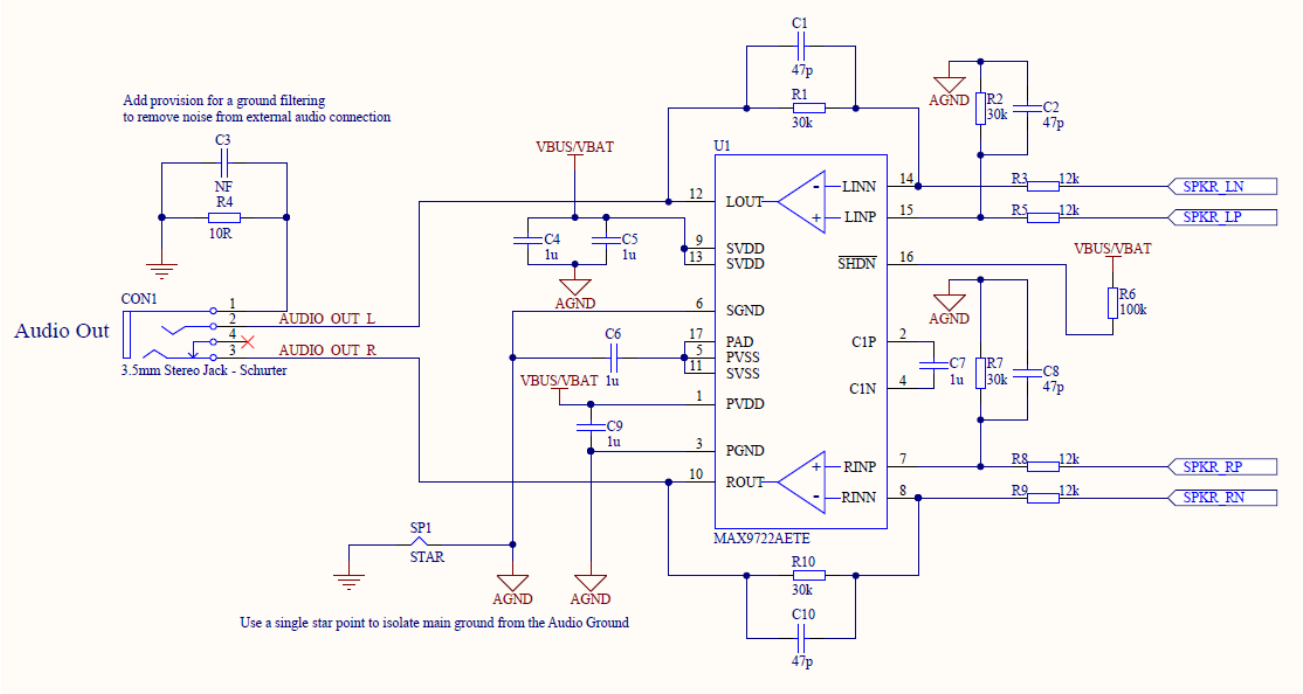


Some amplifiers do not support “capless” operation and require ac coupling on the input and output of the amplifier. Series capacitance can introduce clicks and pops during turn off and turn on as voltage transients occur across the capacitors causing audible spikes on the audio output.

Choice of capacitors used in these configurations is important, avoid using ceramic capacitors as these tend to have high voltage coefficients. Use low voltage coefficients capacitors such as tantalum or electrolytic capacitors to reduce low frequency distortion effects.

In differential mode the tolerance of the source and feedback resistors which set the gain of an amplifier is important. 1% resistors give a 40dB CMRR whereas 0.1% resistors give a 60dB CMRR. Use 0.1% resistor arrays for even better performance.

The module can be used to drive amplifiers in a single ended format. Simply terminate the +ve differential outputs directly to the audio ground. An example of a single ended connection is shown below.

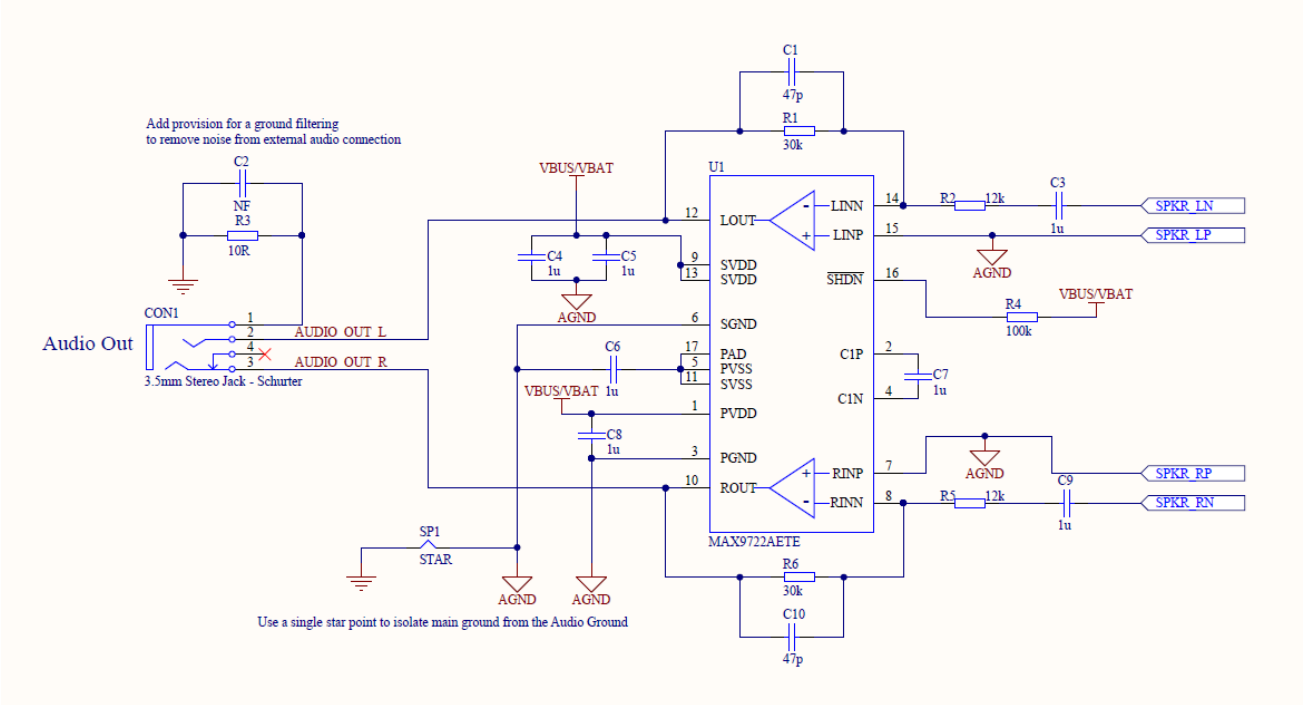

# Solder Reflow Profile

The solder profile is described below.

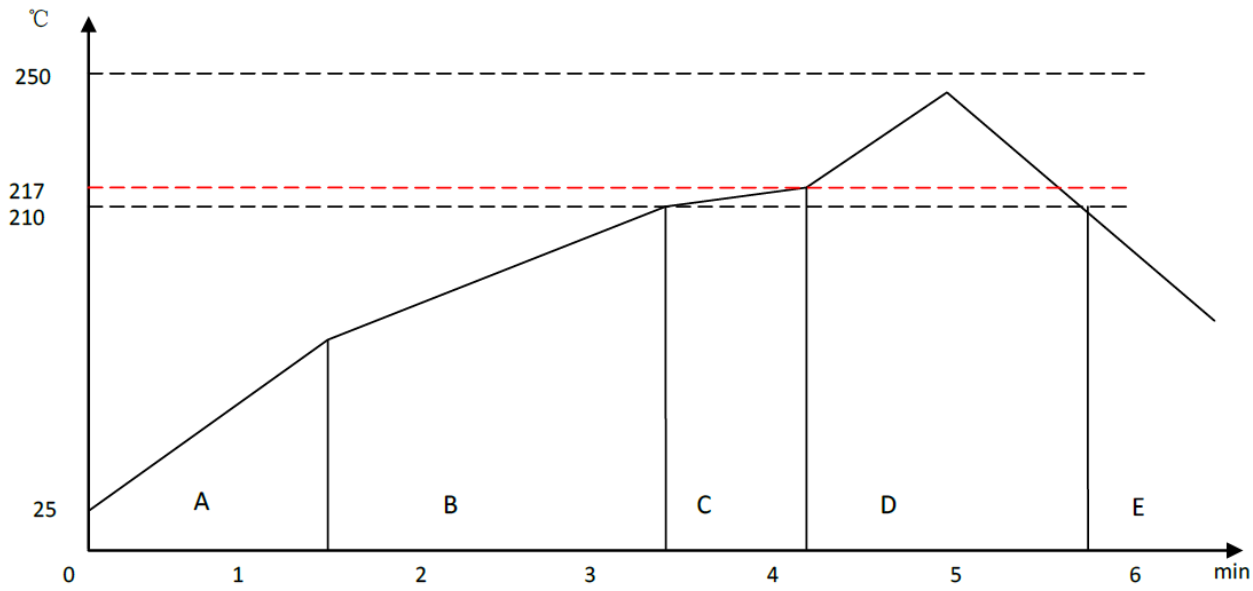


Zone A: Preheat: This raises the temperature at a controlled rate, typically 0.5 - 2C/s. This will preheat the component to 120°C to 150°C to distribute the heat uniformly to the PCB.

Zone B: Equilibrium1: In this zone, the flux becomes soft and uniformly spreads solder particles over the PCB board, preventing re-oxidisation. The recommended temperature for this zone is 150°C to 200°C for 60s to 120s.

Zone C: Equilibrium2: This is optional and in order to resolve the upright component issue. Temperature is 210°C to 217°C for 20s to 30s.

Zone D: Reflow zone: The temperature should be high enough to avoid wetting but low enough to avoid component deterioration. The recommended peak temperature is 230°C to 250°C. The soldering time should be 30s to 90s when the temperature is above 217°C.

Zone E: Cooling: The cooling rate should be fast to keep the solder grains small which will give a longer lasting joint. A typical cooling rate is 4°C/s.

# Regulatory Certifications

The module is delivered with FCC, CE and Bluetooth SIG certifications. This allows to integrate the module in an end product without the need to obtain subsequent and separate approvals from these regulatory agencies. This is valid in the case no other intentional or un-intentional radiator components are incorporated into the product. Without these certifications, an end product cannot be marketed in the relevant regions.

## United States - FCC

In case no other intentional or un-intentional radiator is incorporated, the module's FCC certification allows users to integrate the module into products without the need to obtain subsequent and separate approval.

The module is supplied approved as "intentional transmitter radio module" by the United States' Federal Communications Commission (FCC) with accordance to CFR47 Telecommunications Part 15, Subpart C, section 212. This certification is applicable in all the states in the United States.

The certification allows products to be listed in the NRTL (National Recognized Test Laboratory) as appointed by OSHA (Occupational Safety and Health Administration).

Label and Documentation:

The module has been labelled with its own FCC ID number. In order to the extend the certification granted to the module, its FCC ID number must be displayed on the finished product in which the module is integrated. The following wording should be used "Contains Transmitter Module FCC ID: 2A3WYID7 or “Contains FCC ID: 2A3WYID7”.
RF Exposure Compliance:
This equipment complies with FCC radiation exposure limits set forth for an uncontrolled environment.
Notice to OEM integrator
If the FCC ID is not visible when the module is installed inside another device, then the outside of the device into which the module is installed must also display a label referring to the enclosed module. The end product shall haves the words “Contains Transmitter Module FCC ID: 2A3WYID7”.
The device must be professionally installed.
The intended use is generally not for the general public. It is generally for industry/commercial use.
The connector is within the transmitter enclosure and can only be accessed by disassembly of the transmitter that is not normally required.
The user has no access to the connector.
Installation must be controlled. Installation requires special training.
Any company of the host device which installs this modular with unlimited modular approval should perform the test of radiated &conducted emission and spurious emission, etc. according to FCC part 15C: 15.247 and15.209 & 15.207, 15B Class B requirement, only if the tests result comply with FCC part 15C: 15.247 and 15.209 & 15.207, 15B Class B requirement, then the host can be sole legally.
When the module is installed inside another device, the user manual of the hose contain below

1) This device may not cause harmful interference.
2) This device must accept any interference received, including interference that may cause undesired operation

FCC standards: FCC CFR Title 47 Part 15 Subpart C Section 15.247 : Chip Antenna with gain 0dBi
The user-manual for any product in which the module is integrated in must include the following statements:
Changes or modifications not expressly approved by the party responsible for compliance could void the user's authority to operate the equipment.

This equipment has been tested and found to comply with the limits for a Class B digital device, pursuant to Part 15 of the FCC Rules. These limits are designed to provide reasonable protection against harmful interference in a residential installation. This equipment generates, uses and can radiate radio frequency energy and, if not installed and used in accordance with the instructions, may cause harmful interference to radio communications. However, there is no guarantee that interference will not occur in a particular installation. If this equipment does cause harmful interference to radio or television reception, which can be determined by turning the equipment off and on, the user is encouraged to try to correct the interference by one or more of the following measures: Reorient or relocate the receiving antenna; Increase the separation between the equipment and receiver; Connect the equipment into an outlet on a circuit different from that to which the receiver is connected; Consult the dealer or an experienced radio/ TV technician for help.

This device complies with part 15 of the FCC rules. Operation is subject to the following two conditions (1)this device may not cause harmful interference, and (2) this device must accept any interference received, including interference that may cause undesired operation.
To satisfy FCC RF Exposure requirements for mobile and base station transmission devices, a separation distance of 20 cm or more should be maintained between the antenna of this device and persons during operation. To ensure compliance, operation at closer than this distance is not recommended. The antenna(s) used for this transmitter must not be co-located or operating in conjunction with any other antenna or transmitter.

For further information regarding the FCC certification requirements please review the following websites:
Federal Communications Commission (FCC):
http://www.fcc.gov
FCC Office of Engineering and Technology (OET) Laboratory Division Knowledge Database (KDB): http://apps.fcc.gov/oetcf/kdb/index.cfm

## Europe - CE and RoHS Marking

In case no other intentional or un-intentional radiator is incorporated, the module's CE marking certification allows users to integrate the module into products without the need to obtain subsequent and separate CE approval.
The module has been tested and granted approval as R&TTE Directive product under the 1999/5/EC Essential Requirements for Health and Safety (Article (3.1(a)), Electromagnetic Compatibility, (EMC) (Article 3.1(b)), and Radio (Article 3.2). A Notified Body Opinion has been issued.
The module has also been tested and granted approval under the directive on the restriction of the use of certain hazardous substances in electrical and electronic equipment 2002/95/EC (commonly referred to as the Restriction of Hazardous Substances Directive or RoHS). This certification ensures the module is environmental safe and free from hazardous substances (including Lead).
Both certifications are applicable in all the 27 countries of the European Economic Area.
Labelling and Documentation
Products complying with all relevant essential requirements shall bear the CE conformity marking accompanied by the identification number XXX-XXX
The RoHS certification does not dictate any specific product labelling. However, we recommend marking the product with a "RoHS Compliant" statement.

R&TTE Directive requires a manufacturer to establish technical documentation. It must be kept by the manufacturer or his authorised representative in the EU for at least 10 years after the last product has been manufactured. The documentation must cover: A general description of the product, conceptual design and manufacturing drawings and schemes of components, sub-assemblies, circuits and other design documentation, descriptions and explanations necessary for the understanding of said drawings and schemes and the operation of the product, a list of the standards referred to in Article 5, applied in full or in part, and descriptions and explanations of the solutions adopted to meet the essential requirements of the Directive where such standards results of design calculations made, examinations carried out, etc., test reports.
Test reports must include the following table containing the module tests:

| Certification | Standards | Article | Laboratory | Report Number | Date |
|---|---|---|---|---|---|
| Safety | EN 60950-1:2006+A11:2009+A1:2010 | (3.1(a)) | | | |
| Health | EN 50371:2002-03 | | | | |
| EMC | EN 301 489-1 V1.8.1 (2008-04); EN 301 489-17 V2.1.1 (2009-05) | (3.1(b)) | | | |
| Radio | EN 300 328 V1.7.1 (2006-10) | (3.2) | | | |

For further labelling and CE marking requirements please review the R&TTE Compliance Association Technical Guidance: http://rtteca.com/
For further information regarding the R&TTE certification requirements please review the following websites:

Radio and Telecommunications Terminal Equipment (R&TTE):
http://ec.europa.eu/enterprise/rtte/index_en.htm

European Conference of Postal and Telecommunications Administrations (CEPT):
http://www.cept.org

European Telecommunications Standards Institute (ETSI):
http://www.etsi.org

European Radio Communications Office (ERO):
http://www.ero.dk

# Ordering Information

| Order Number | Description |
|---|---|
| IDC747-1 | Class1 Bluetooth 5.2 Module |
| IDC747-1-DK | IDC707-1 Development board |

Modules are shipped Flashed with the latest AudioAgent firmware production build. Customers need to confirm at order with distributors that they will receive the firmware build they require. For volume orders (1k quantities), modules can be shipped flashed with custom firmware. Please inquire with info@iot747.com for more information.

# Packaging

Modules are shipped in a Tape and Reel. The package and inside tape and reel dimensions are shown below:

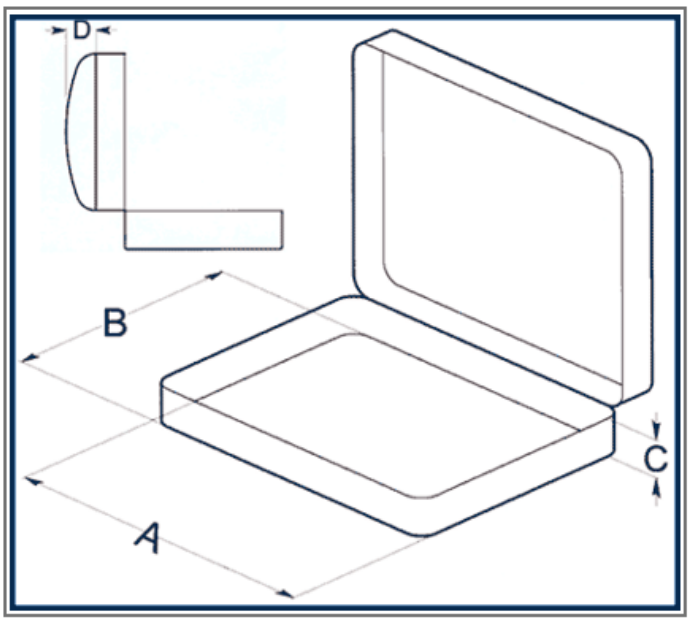


- A= 380mm
- B=380mm
- C=85mm
- D=0mm

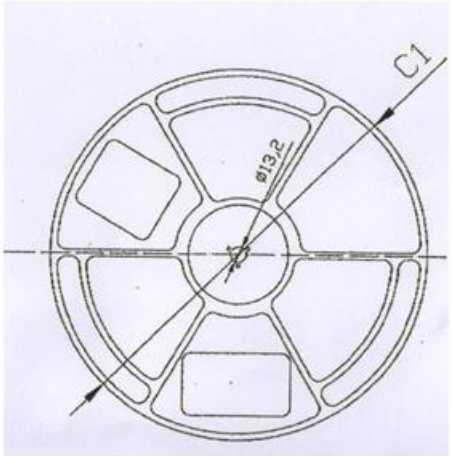


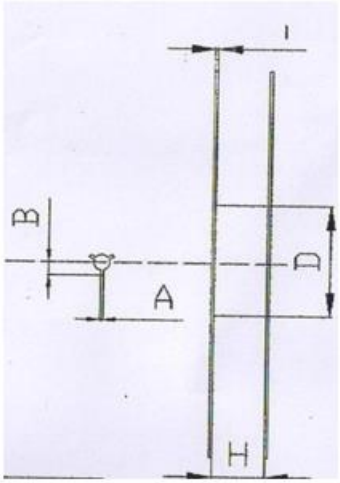


- C1= 330mm
- A=2.5mm
- B=11mm
- H=56.8mm
- I=2.25mm
- D=99.5mm

# General Notes

IOT747 products are not authorised for use in life-support or safety-critical applications. Use in such applications is done at the sole discretion of the customer. IOT747 will not warrant the use of its devices in such applications.

While every care has been taken to ensure the accuracy of the contents of this document, IOT747 cannot accept responsibility for any errors. IOT747 reserves the right to make modifications, corrections and any other changes to its products at any time. Customers should obtain the latest information before placing orders.

IOT747 other products, services and names used in this document may have been trademarked by their respective owners. The publication of this information does not imply that any license is granted under any patent or other rights owned by IOT747.

Refer to www.iot747.com for more information. IOT747® is a trading name for Company Deep Limited.

# Change Log

6/1/2021: Draft Version

9/4/2021: Minor Corrections / Typos – Added information on front page

20/7/2021: Clarified Supply configurations. Added Test Points for Fixed Supply

21/7/2021: Simplified Supply configuration – Removed detailed Power States. Deleted references to SPI as only used in IDC707.

## CE Statement

Herby,CompanyDeep LTD declares that this IDC7 Bluetooth Module， IDC747 is in compliance with the essential requirements and other relevant provisions of Directive 2014/53/EU. In accordance with Article 10(2) and Article 10(10), this product allowed to be used in all EU member states.
Use the IDC7 Bluetooth Module in the environment with the temperature between -40℃ and 85℃

Operation Frequency:2402MHz~2480MHz
Max output power:
BT: 0.0035W BLE: 0.0015W

Manufacturer： CompanyDeep LTD
Address： 122 Ross Street, Cambridge, CB1 3BU, England
E-mail: rafik@iot747.com

# DECLARATION OF CONFORMITY

I hereby declare that the product

**Product:**
Product Name: IDC7 Bluetooth Module
Model: IDC747, IDC757, IDC767, IDC777, IDC717, IDC727, IDC737
Brand Name: N/A
Hardware Version: V0.1
Software Version: V1.0

(Name of product, type or model, batch or serial number)

satisfies all the technical regulations applicable to the product within the scope of Council Directives 2014/53/EU, 2014/35/EU and 2014/30/EU:and declare that the same application has not been lodged with any other notified body.

**EN IEC 62368-1:2020+A11:2020**
**EN 50663:2017**
**EN 62479:2010**
**ETSI EN 301 489-17 V3.2.4 (2020-09)**
**ETSI EN 301 489-1 V2.2.3 (2019-11)**
**ETSI EN 300 328 V2.2.2 (2019-07)**

(Title(s) of regulations, standards, etc.)

**All essential radio test suites have been carried out.**

**NOTIFIED BODY**: MiCOM Labs Inc
– **Address**:

575 Boulder Court,
Pleasanton, California94566
USA
Identification Number: 2280

**MANUFACTURER** or **AUTHORISED REPRESENTATIVE**:
– **Address**:

CompanyDeep Ltd
122, Ross Street, Cambridge, CB13BU, United Kingdom

This declaration is issued under the sole responsibility of the manufacturer and, if applicable, his authorised representative.

**Point of contact:**

Rafik Jallad, +447966144719
(Name, telephone and fax number)

2022-01-20
(Place, date of issue)

R. Jallad
(Signature)

Rafik Jallad, Director
(Name and title in block letters)