USER MANUAL

FINGERPRINT LOCK

-S1580 V3.2 FOR NEW MODEL SOLID LEVER FINGERPRINT KEY VERSION

Special Attention:

1. Mechanical keys please keep outdoor, just in case lock out of doors.
2. Please always prepare a back-up battery and keep outdoor, for fast 10 seconds replacing low power battery. (4*AAA batteries normally support 1 year using)
3. Reading this manual carefully before installation, and keep it for future reference.

Notice: please refer to the operations of model option you've purchased.

Model option 1: fingerprint+key

Model option 2: fingerprint+card+key

Model option 3: fingerprint+passcode+key

OPERATION GUIDANCE

1)**Fingerprint management**

find the mechanical key hole, input the mechanical key. Rotating the mechanical key clockwise for about 15-20 degrees and hold on the switching, hold it for about 2-3 seconds, until the blue light lights up and releases it after hearing the sound of "di". Record fingerprint: use your same fingerprint area to touch the fingerprint sensor 5 times in multiple angles, if during the process of all the five times touching, blue light flash; and in the fifth time, hearing a long -"di--" sound, the fingerprint recording succeed. Note: during the recording time, if any single time of fingerprint sensor touching lead to a red-light flash and heard short "di" sound, which means this pieces of recording is invalid. When this happened, touch the fingerprint sensor again in multiple times with blue light lights up until hearing the sound of "di" and release it.

Fingerprint identification to open the door: press the fingerprint, if the fingerprint is correct, the green light will beep briefly, the motor will turn to unlock the door, and the motor will turn off automatically 6 seconds later; If the fingerprint is not correct, the red light will beep 2 times.

1.2) Delete lock data

Insert the mechanical key, rotate about 15-20 degrees clockwise and hold it for about 5 seconds, (firstly, the green light will beep) until the red light is beeping , then immediately return the mechanical key back, then will see the long light-up green light is on with long "beep ~" sound. All data stored are deleted.

2) **Emergency mechanical key management (key hidden on handle)**

Use special tool on the key chain to open the key cover of handle. Inserting the mechanical key and rotate counterclockwise about 45 degrees to press the handle and open the door.

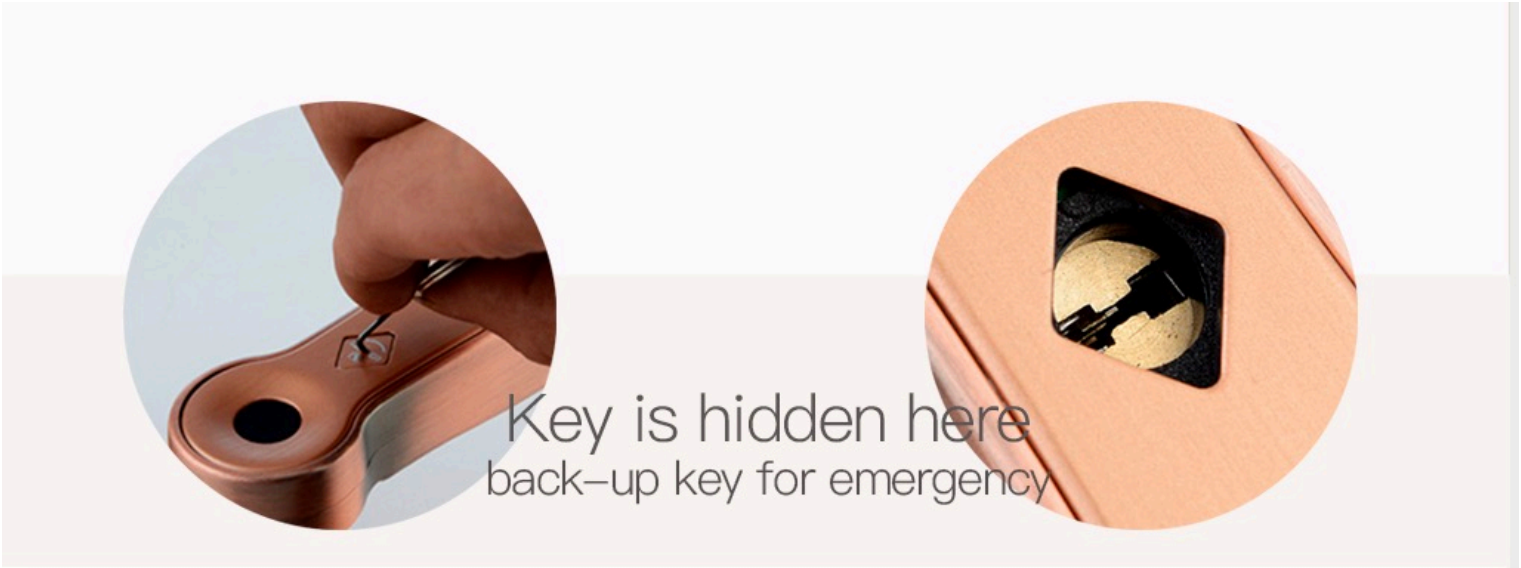

3) **Card management** (optional)

card location: on the panel of front handle. The card can be entered at the same time under the mode of fingerprint record. Firstly: Rotate the mechanical key clockwise for about 15-20 degrees and hold on the switching, hold it for about 2-3 seconds, until the blue light lights up and releases it after hearing the sound of "di". Record card: scan the card in the correct card area 2-5times, every valid scan will have 'di' sound, until the blue light lights up and hearing the sound of "di" which is sign of card recording process finished.

4) **Passcode management** (optional)

Pin's location: To add the password or enter the password, press wake up button firstly (the tiny black button in the forehead of lock). You will see the passcode after pressing the wake-up button. The first row of pin is 01234* digits, press the wake-up button again, you can see the second row of pin which is 56789# digit. '*' digit is delete digit for deleting previous wrongfully inputting digit, '#' digit is password confirmation digit, after enter this digit, which means you have confirmed your passcode to record/unlock.

4.2) Add Passcode: The password can be entered at the same time under the mode of fingerprint input. Firstly: Rotate the mechanical key clockwise for about 15-20 degrees and hold on the switching, hold it for about 2-3 seconds, until the blue light lights up and releases it after hearing the sound of "di". For example: if you want to set the password to be 352816, the operation is as follows: under the recording mode, press wake up button to switch to 01234# light, input 3, press wake up to switch to 56789* light, input 5; press wake-up button again to switch to input 2, press wake-up button again switch to input 8, switch to input 1, switch to input 6, press the digit '#' to confirm the password, if succeed, you will hear a long-time (about 2seconds) 'di' sound and the green light will light up for 2seconds. Notice !: all the password recording operations has to be under the lock's fingerprint/password recording mode, otherwise, the recording of password/fingerprint will be failed. Please try again by following the process to recording your own desired passcode combination for unlocking.

Lock structure

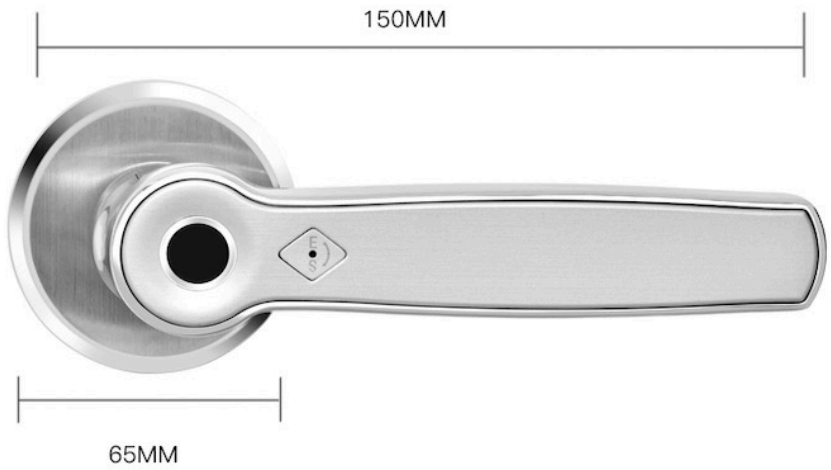

Mortise (latches/5050/3585/4585/5072/6072 and more)

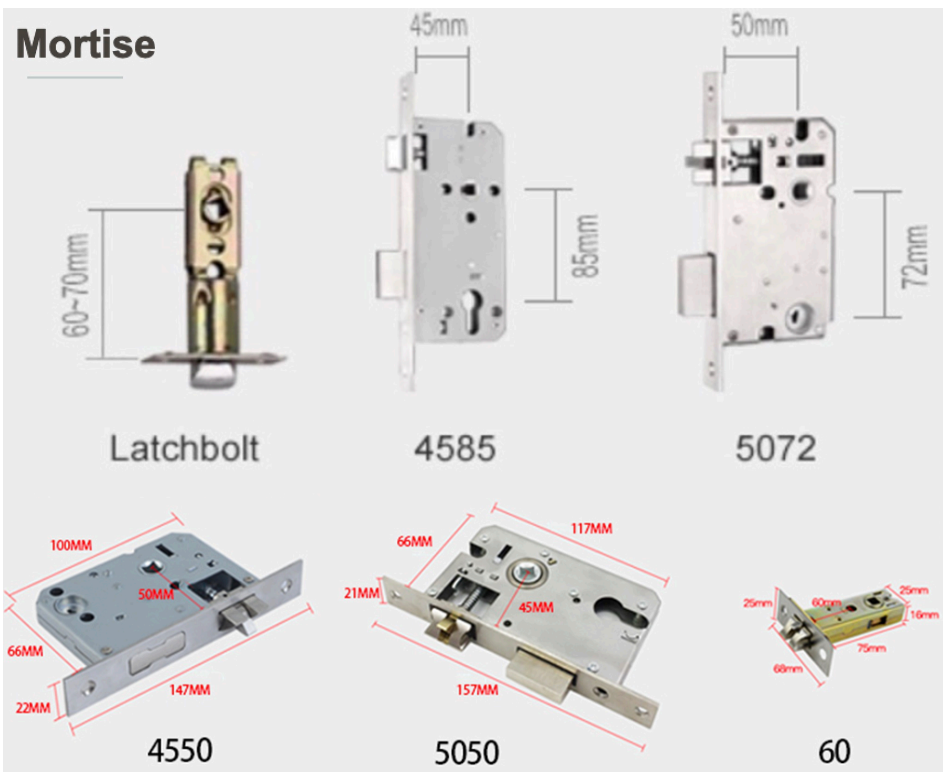

Product specification

Models	s1580
unlock method	fingerprint, mechanical key, password (optional) or card (optional)
Panel size	front panel: 150mm (length)x68mm (width)x8mm(thick) back panel:150mm (length)x68mm (width)x8mm(thick) 1.5kg include package
Weight	DC6V, 4 Piecer of AAA
Votage	-40°C ~ +70°C
Working temperature	RH (20%~90%)
Working humidity	The red light glint when voltage below 4.8V
powerless indication	304 stainless steel panel, Zinc alloy handle
Material	40 pieces of fingerprint, 200 groups passcode 200sets of card
figueres	
Eff unlock time	4-6 seconds (freely setting on app)
Suitable for door thickness	30-90mm(can customize)
battery usage life	More than 1 years
low volt alarm	4.8V
standby electric current	60 microamps
working electric current	less than 200 milliampere
unlocking time	About 1.5s
key type	capacitive touching key
fingerprint scanner type	semiconductor
False Accept Rate	<0.0001%
colors	Silver, black with red bronze, golden, brown
Door applicable	wooden doors, aluminum doors, gate doors

Packing list

Front panel 1	Back panel 1	User manual 1
Strike (plate) 1	screw package 1	Mechanical key 2
Square steel 1	Pin 1	Waterproof ruber plate 1
Latch 1 or (mortise & cylinder 1)	Card (optional) 2	

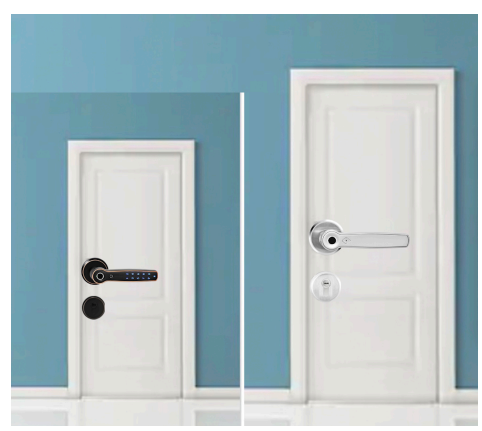

Installation (for single latch, for mortise please check the next page)

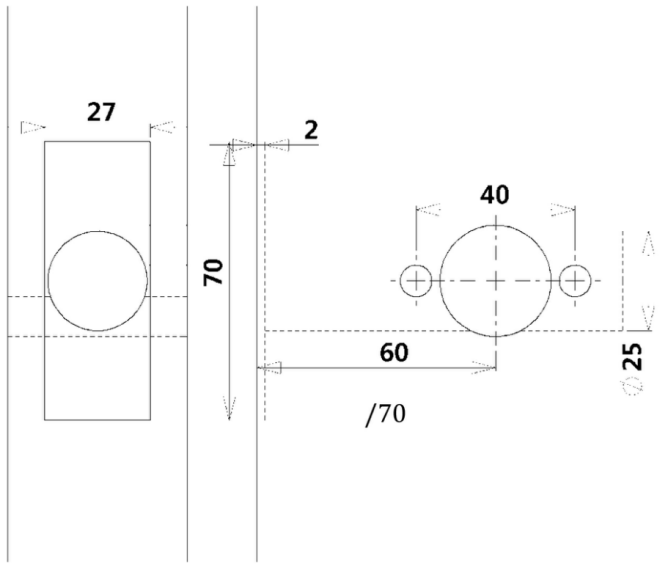

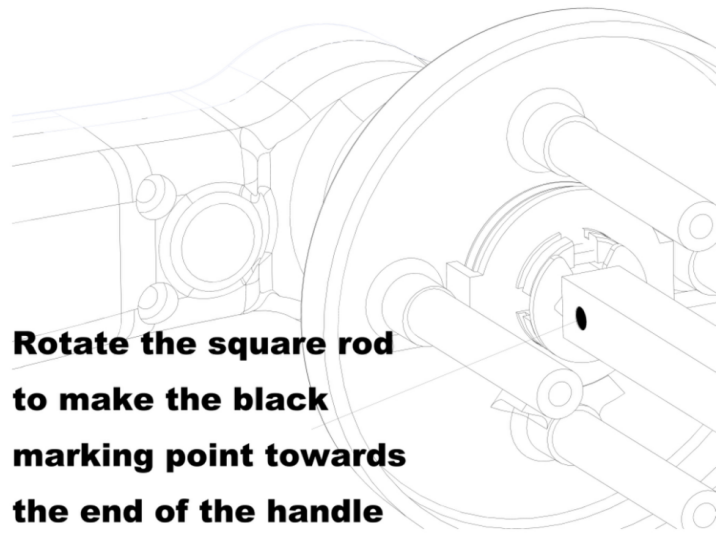

Install step 1: install the latch first

Install step 4: Install the rear panel and handle

Install step 2: install the screw and Threaded tube

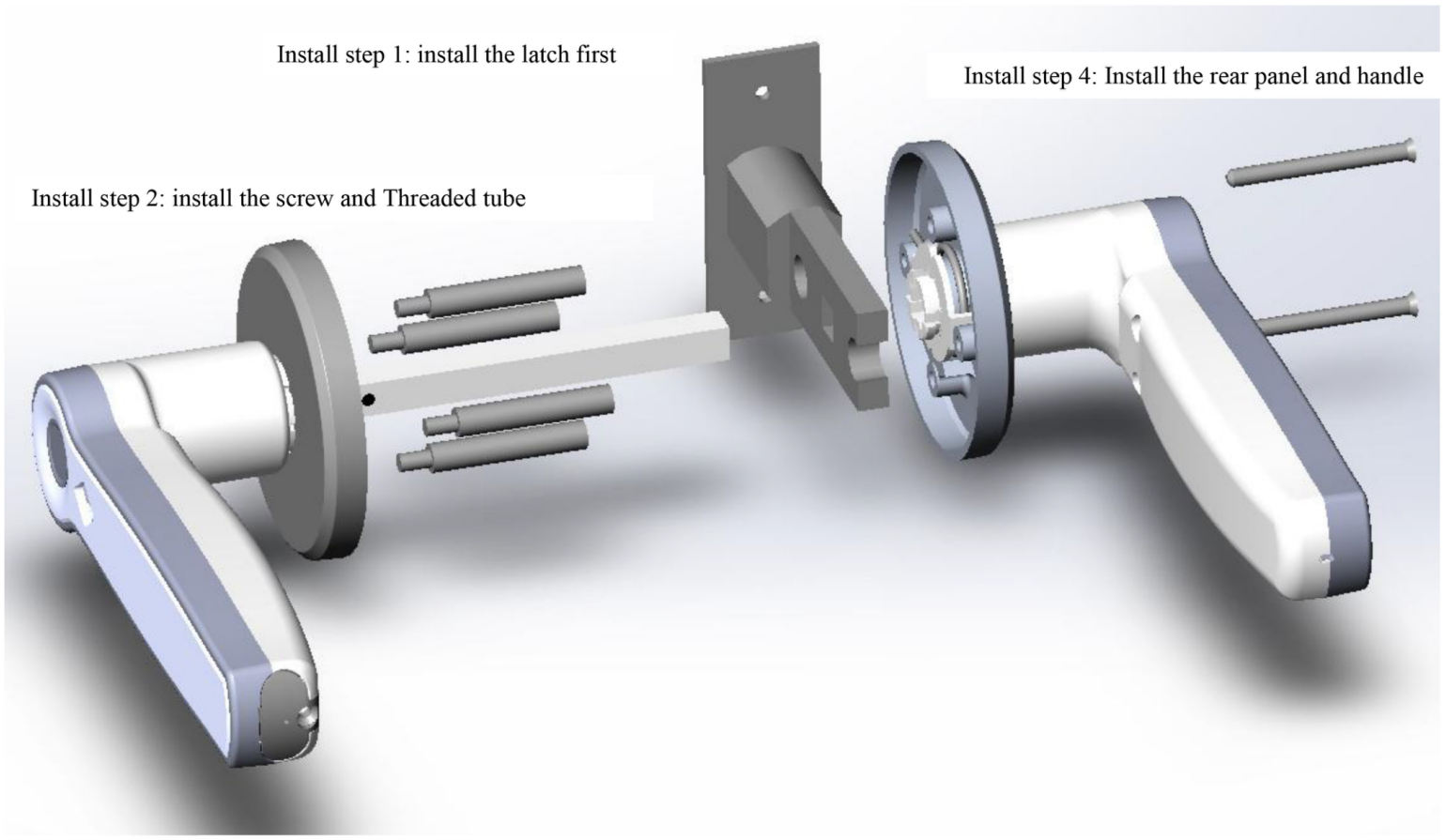

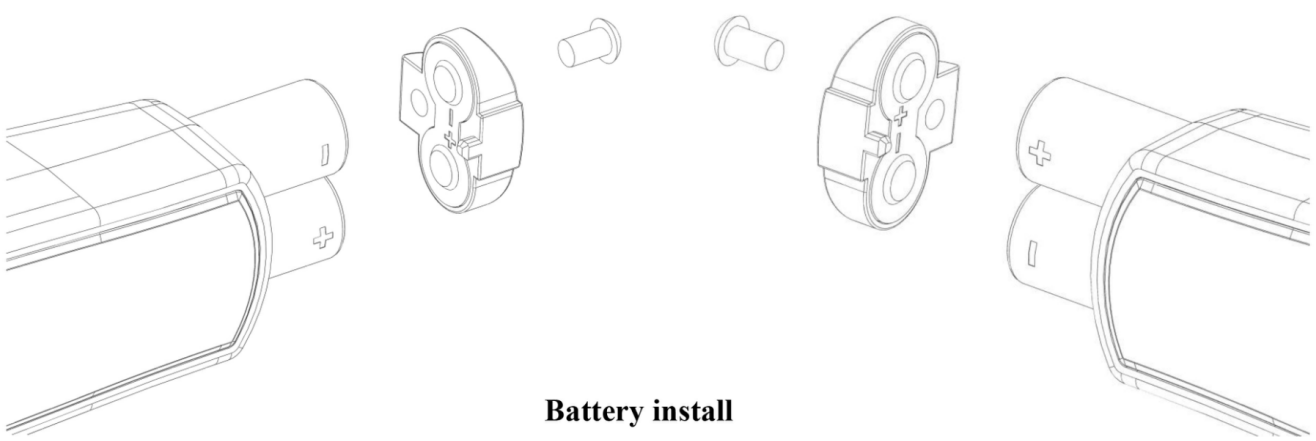

Battery install

INSTALLATION (FOR MORTISE)

Installation (for mortise 5050/5072/5572/6072/6068/6085)

Rotate the square shaft so that the black mark points towards the ground before install the front panel.

Double side fingerprint type: front and rear panel need to set as the above step.

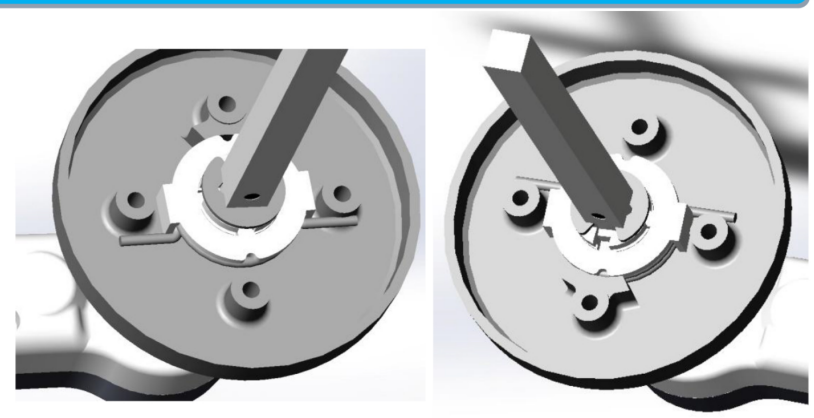

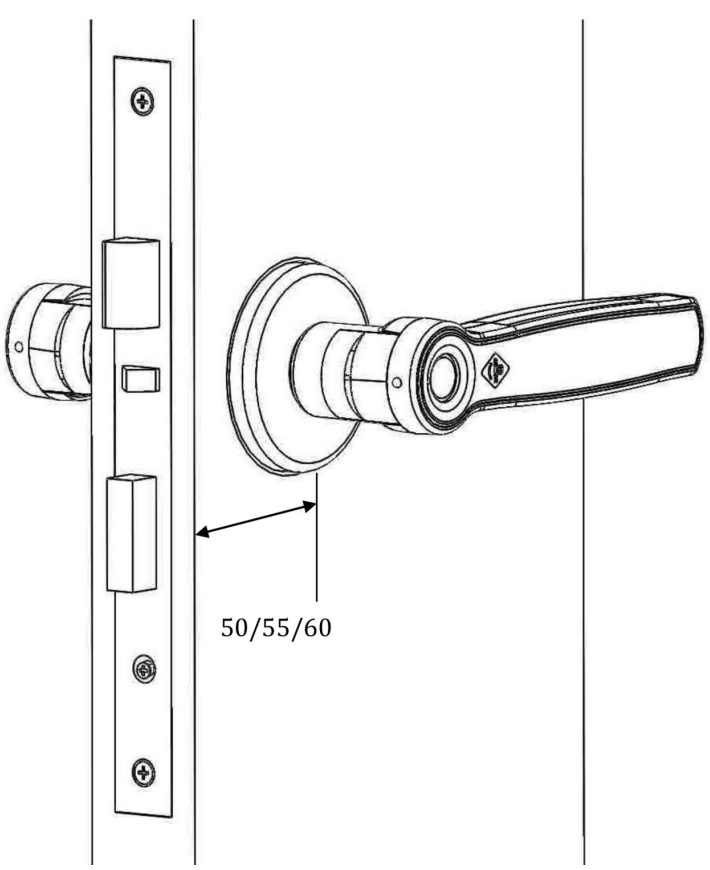

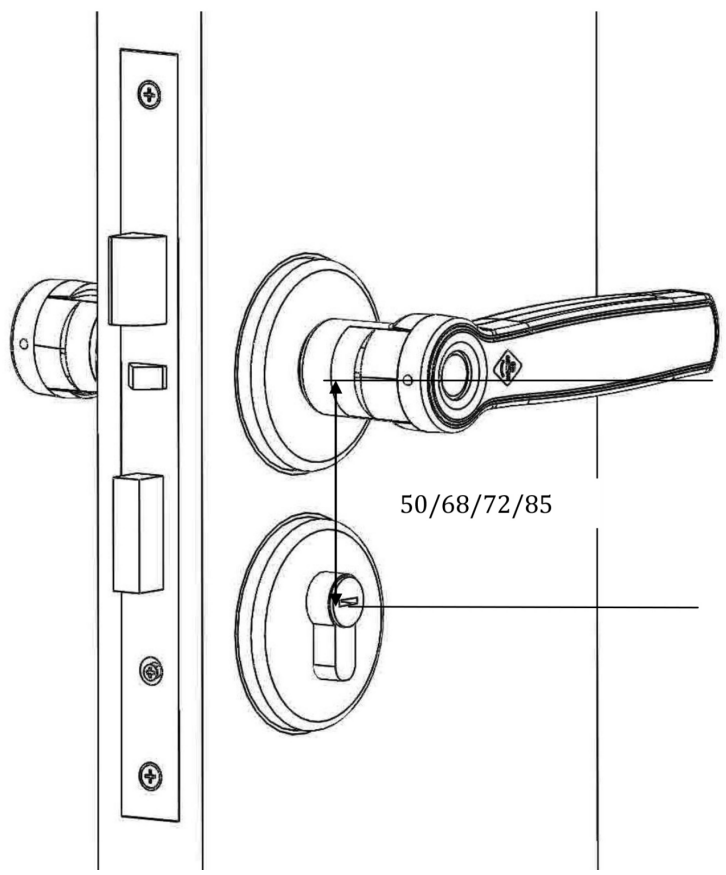

Guarantee

Customer name: _____

Customer calls: _____

Purchase date: _____

Product name: _____

Product model: _____

Note:

1. Please keep this card so that you can use it when you need warranty service
2. We provide you with a one-year warranty from the date of purchase.
3. This warranty service is valid for customers in any country in the world.

This device complies with Part 15 of the FCC Rules. Operation is subject to the following two conditions: (1) this device may not cause harmful interference, and (2) this device must accept any interference received, including interference that may cause undesired operation

NOTE: This equipment has been tested and found to comply with the limits for a Class B digital device, pursuant to Part 15 of the FCC Rules. These limits are designed to provide reasonable protection against harmful interference in a residential installation. This equipment generates, uses and can radiate radio frequency energy and, if not installed and used in accordance with the instructions, may cause harmful interference to radio communications. However, there is no guarantee that interference will not occur in a particular installation.
If this equipment does cause harmful interference to radio or television reception, which can be determined by turning the equipment off and on, the user is encouraged to try to correct the interference by one or more of the following measures:
-- Reorient or relocate the receiving antenna.
-- Increase the separation between the equipment and receiver.
-- Connect the equipment into an outlet on a circuit different from that to which the receiver is connected.
-- Consult the dealer or an experienced radio/TV technician for help.

Warning: changes or modifications not expressly approved by the party responsible for compliance could void the user's authority to operate the equipment