FCC Test Report

Client Name	:	**Shye West, Inc.(dba: Imagine This)**
Client Address	:	**43 CORPORATE PARK STE 102, IRVINE, CA, 92606-5137, USA**
Product Name	:	**Wireless Charger Lamp Speaker**
Report Date	:	**Aug. 31, 2022**

Shenzhen Anbotek Compliance Laboratory Limited

Shenzhen Anbotek Compliance Laboratory Limited
Address:1/F.,Building D,Sogood Science and Technology Park, Sanwei Community, Hangcheng Street, Bao'an District, Shenzhen, Guangdong, China.
Tel:(86) 0755-26066440 Fax:(86) 0755-26014772 Email:service@anbotek.com
Hotline 400-003-0500
www.anbotek.com.cn

Contents

1. General Information 4
1.1. Client Information 4
1.2. Description of Device (EUT) 4
1.3. Auxiliary Equipment Used During Test 5
1.4. Description of Test Modes 5
1.5. Description Of Test Setup 6
1.6. Test Equipment List 7
1.7. Measurement Uncertainty 8
1.8. Description of Test Facility 8
2. Summary of Test Results 9
3. Conducted Emission Test 10
3.1. Test Standard and Limit 10
3.2. Test Setup 10
3.3. Test Procedure 10
3.4. Test Data 11
4. Radiation Spurious Emission 14
4.1. Test Standard and Limit 14
4.2. Test Setup 14
4.3. Test Procedure 15
4.4. Test Data 15
5. Antenna Requirement 20
5.1. Test Standard and Requirement 20
5.2. Antenna Connected Construction 20
APPENDIX I -- TEST SETUP PHOTOGRAPH 21
APPENDIX II -- EXTERNAL PHOTOGRAPH 23
APPENDIX III -- INTERNAL PHOTOGRAPH 23

Shenzhen Anbotek Compliance Laboratory Limited
Address:1/F.,Building D,Sogood Science and Technology Park, Sanwei Community, Hangcheng Street, Bao'an District, Shenzhen, Guangdong, China.
Tel:(86) 0755-26066440 Fax:(86) 0755-26014772 Email:service@anbotek.com
Hotline 400-003-0500
www.anbotek.com.cn

TEST REPORT

Applicant	:	Shye West, Inc.(dba: Imagine This)
Manufacturer	:	ShenZhen Semetor Electronics Co., Ltd
Product Name	:	Wireless Charger Lamp Speaker
Model No.	:	S21PRO, INV10041
Trade Mark	:	N.A.
Rating(s)	:	Input:5VDC 2A Wireless Charger Output: 5W MAX Input:9VDC 2A Wireless Charger Output 10W MAX DC 3.7V by Rechargeable Li-ion Battery. 1800mAh
Test Standard(s)	:	**FCC Part15 Subpart C, Paragraph 15.209**
Test Method(s)	:	**ANSI C63.10: 2020**

The device described above is tested by Shenzhen Anbotek Compliance Laboratory Limited to determine the maximum emission levels emanating from the device and the severe levels of the device can endure and its performance criterion. The measurement results are contained in this test report and Shenzhen Anbotek Compliance Laboratory Limited is assumed full of responsibility for the accuracy and completeness of these measurements. Also, this report shows that the EUT (Equipment Under Test) is technically compliant with the FCC Part 15 Subpart C requirements.

This report applies to above tested sample only and shall not be reproduced in part without written approval of Shenzhen Anbotek Compliance Laboratory Limited.

Date of Receipt	Dec. 16, 2021
Date of Test	Dec. 16~27, 2021
Prepared By	(Ella Liang)
Approved & Authorized Signer	(Kingkong Jin)

Shenzhen Anbotek Compliance Laboratory Limited
Address:1/F.,Building D,Sogood Science and Technology Park, Sanwei Community, Hangcheng Street, Bao'an District, Shenzhen, Guangdong, China.
Tel:(86) 0755-26066440 Fax:(86) 0755-26014772 Email:service@anbotek.com
Hotline 400-003-0500
www.anbotek.com.cn

1. General Information

1.1. Client Information

Applicant	:	Shye West, Inc.(dba: Imagine This)
Address	:	43 CORPORATE PARK STE 102, IRVINE, CA, 92606-5137, USA
Manufacturer	:	ShenZhen Semetor Electronics Co., Ltd
Address	:	B3, 3th floor, guanglong building, No.162, pingxin north road, hehua community, pinghu street, longgang district, shenzhen city, guangdong, China
Factory	:	Dongguan Zeanew Technology Co.,Ltd
Address	:	Room 801, building 2, No. 38, Weixing Road 6, Yantian, Fenggang town, Dongguan, Guangdong Province, China

1.2. Description of Device (EUT)

Product Name	:	Wireless Charger Lamp Speaker	
Model No.	:	S21PRO, INV10041 (Note: All samples are the same except the model number & appearance, so we prepare "S21PRO" for test only.)	
Trade Mark	:	N.A.	
Test Power Supply	:	AC 120V, 60Hz for adapter	
Test Sample No.	:	1-2-1(Normal Sample), 1-2-2(Engineering Sample)	
Product Description	:	Operation Frequency:	BDR+EDR: 2402-2480MHz WPT: 110.5-205KHz
		Number of Channel:	BDR+EDR: 79 Channels
		Modulation Type:	BDR+EDR: GFSK, π/4-DQPSK, 8-DPSK WPT: FSK
		Antenna Type:	BDR+EDR: PCB Antenna WPT: Inductive loop coil Antenna
		Antenna Gain(Peak):	BDR+EDR: -0.61 dBi (Provided by customer) WPT: 0 dBi (Provided by customer)
		Adapter:	N/A
Remark: 1) For a more detailed features description, please refer to the manufacturer's specifications or the User's Manual. 2) This report is for WPT module.			

Shenzhen Anbotek Compliance Laboratory Limited
Address:1/F.,Building D,Sogood Science and Technology Park, Sanwei Community, Hangcheng Street, Bao'an District, Shenzhen, Guangdong, China.
Tel:(86) 0755-26066440 Fax:(86) 0755-26014772 Email:service@anbotek.com
Hotline 400-003-0500
www.anbotek.com.cn

1.3. Auxiliary Equipment Used During Test

Adapter	:	M/N: A2023 Input: AC 100-240V 0.7A 50-60Hz USB1 Output: DC 5V 2.4A USB2 Output: DC 5V 2.4A
Wireless charging load	:	Manufacturer: Shenzhen Ouju Technology Co., Ltd. M/N: CD2577 Power: 5W/7.5W/10W/15W Last Cal.: Oct. 26, 2020 Cal. Interval: 1 Year

1.4. Description of Test Modes

To investigate the maximum EMI emission characteristics generates from EUT, the test system was pre-scanning tested base on the consideration of following EUT operation mode or test configuration mode which possible have effect on EMI emission level. Each of these EUT operation mode(s) or test configuration mode(s) mentioned above was evaluated respectively.

Pretest Mode	Description
Mode 1	Charging +Wireless Charging

For Conducted Emission	
Final Test Mode	Description
Mode 1	Charging +Wireless Charging

For Radiated Emission	
Final Test Mode	Description
Mode 1	Charging +Wireless Charging

Note: (1)Test channel is 0.1275MHz.

(2) All the situation(full load, half load and empty load) has been tested,only the worst situation (full load 10W) was recorded in the report.

Shenzhen Anbotek Compliance Laboratory Limited
Address:1/F.,Building D,Sogood Science and Technology Park, Sanwei Community, Hangcheng Street, Bao'an District, Shenzhen, Guangdong, China.
Tel:(86) 0755-26066440 Fax:(86) 0755-26014772 Email:service@anbotek.com
Hotline 400-003-0500
www.anbotek.com.cn

1.5. Description Of Test Setup

CE

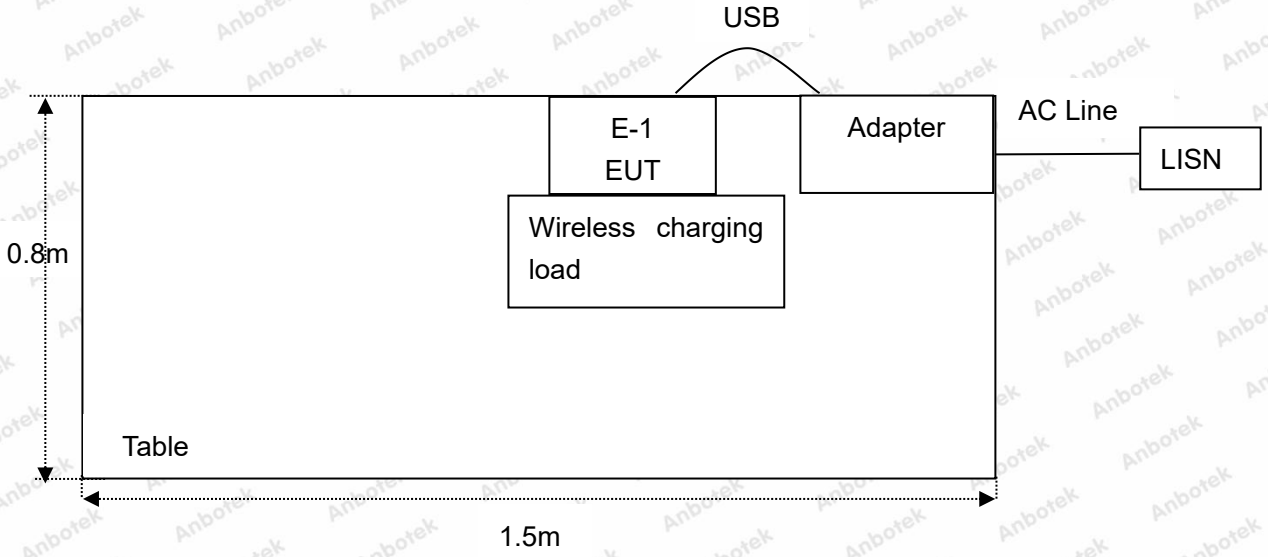

RE

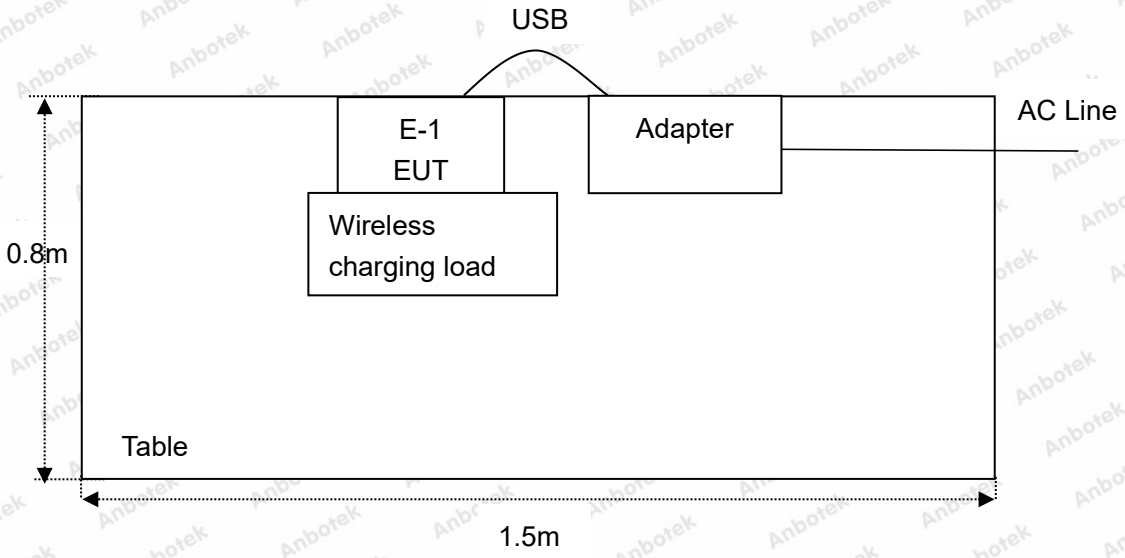

1.6. Test Equipment List

Item	Equipment	Manufacturer	Model No.	Serial No.	Last Cal.	Cal. Interval
1.	L.I.S.N. Artificial Mains Network	Rohde & Schwarz	ENV216	100055	Oct. 22, 2021	1 Year
2.	Three Phase V-type Artificial Power Network	CYBERTEK	EM5040DT	E215040DT001	Jul 05, 2022	1 Year
3.	EMI Test Receiver	Rohde & Schwarz	ESCI	100627	Oct. 22, 2021	1 Year
4.	EMI Test Receiver	Rohde & Schwarz	ESR26	101481	Oct. 22, 2021	1 Year
5.	RF Switching Unit	Compliance Direction	RSU-M2	38303	Oct. 22, 2021	1 Year
6.	MAX Spectrum Analysis	Agilent	N9020A	MY51170037	Oct. 22, 2021	1 Year
7.	Preamplifier	SKET Electronic	BK1G18G30 D	KD17503	Oct. 22, 2021	1 Year
8.	Double Ridged Horn Antenna	Instruments corporation	GTH-0118	351600	Oct. 22, 2021	2 Year
9.	Bilog Broadband Antenna	Schwarzbeck	VULB9163	VULB 9163-289	Oct. 22, 2021	2 Year
10.	Loop Antenna	Schwarzbeck	FMZB1519B	00053	Oct. 22, 2021	2 Year
11.	Horn Antenna	A-INFO	LB-180400-K F	J211060628	Oct. 22, 2021	2 Year
12.	Pre-amplifier	SONOMA	310N	186860	Oct. 22, 2021	1 Year
13.	EMI Test Software EZ-EMC	SHURPLE	N/A	N/A	N/A	N/A
14.	RF Test Control System	YIHENG	YH3000	2017430	Oct. 22, 2021	1 Year
15.	Power Sensor	DAER	RPR3006W	15I00041SN045	Oct. 22, 2021	1 Year
16.	Power Sensor	DAER	RPR3006W	15I00041SN046	Oct. 22, 2021	1 Year
17.	MXA Spectrum Analysis	KEYSIGHT	N9020A	MY53280032	Oct. 22, 2021	1 Year
18.	MXG RF Vector Signal Generator	Agilent	N5182A	MY48180656	Oct. 22, 2021	1 Year
19.	Signal Generator	Agilent	E4421B	MY41000743	Oct. 22, 2021	1 Year
20.	DC Power Supply	IVYTECH	IV3605	1804D360510	Oct. 22, 2021	1 Year
21.	Constant Temperature Humidity Chamber	ZHONGJIAN	ZJ-KHWS80 B	N/A	Oct. 22, 2021	1 Year

Shenzhen Anbotek Compliance Laboratory Limited
Address:1/F.,Building D,Sogood Science and Technology Park, Sanwei Community, Hangcheng Street, Bao'an District, Shenzhen, Guangdong, China.
Tel:(86) 0755-26066440 Fax:(86) 0755-26014772 Email:service@anbotek.com
Hotline 400-003-0500
www.anbotek.com.cn

1.7. Measurement Uncertainty

Radiation Uncertainty	:	Ur = 3.9 dB (Horizontal)
		Ur = 3.8 dB (Vertical)
Conduction Uncertainty	:	Uc = 3.4 dB

1.8. Description of Test Facility

The test facility is recognized, certified, or accredited by the following organizations:

FCC-Registration No.: 184111

Shenzhen Anbotek Compliance Laboratory Limited, EMC Laboratory has been registered and fully described in a report filed with the (FCC) Federal Communications Commission. The acceptance letter from the FCC is maintained in our files. Registration No. 184111.

ISED-Registration No.: 8058A

Shenzhen Anbotek Compliance Laboratory Limited, EMC Laboratory has been registered and fully described in a report filed with the (ISED) Innovation, Science and Economic Development Canada. The acceptance letter from the ISED is maintained in our files. Registration 8058A.

Test Location

Shenzhen Anbotek Compliance Laboratory Limited.
1/F, Building D, Sogood Science and Technology Park, Sanwei community, Hangcheng Street, Bao'an District, Shenzhen, Guangdong, China.518102

2. Summary of Test Results

Standard Section	Test Item	Result
FCC Part 15, Paragraph 15.207	Conducted Emission Test	PASS
FCC Part 15, Paragraph 15.209(a)(f)	Spurious Emission	PASS
Part 15.203	Antenna Requirement	PASS

Shenzhen Anbotek Compliance Laboratory Limited
Address:1/F.,Building D,Sogood Science and Technology Park, Sanwei Community, Hangcheng Street, Bao'an District, Shenzhen, Guangdong, China.
Tel:(86) 0755-26066440 Fax:(86) 0755-26014772 Email:service@anbotek.com
Hotline 400-003-0500
www.anbotek.com.cn

3. Conducted Emission Test

3.1. Test Standard and Limit

Test Standard	FCC Part15 Section 15.207		
Test Limit	Frequency	Maximum RF Line Voltage (dBuV)	
		Quasi-peak Level	Average Level
	150kHz~500kHz	66 ~ 56 *	56 ~ 46 *
	500kHz~5MHz	56	46
	5MHz~30MHz	60	50
Remark: (1) *Decreasing linearly with logarithm of the frequency. (2) The lower limit shall apply at the transition frequency.			

3.2. Test Setup

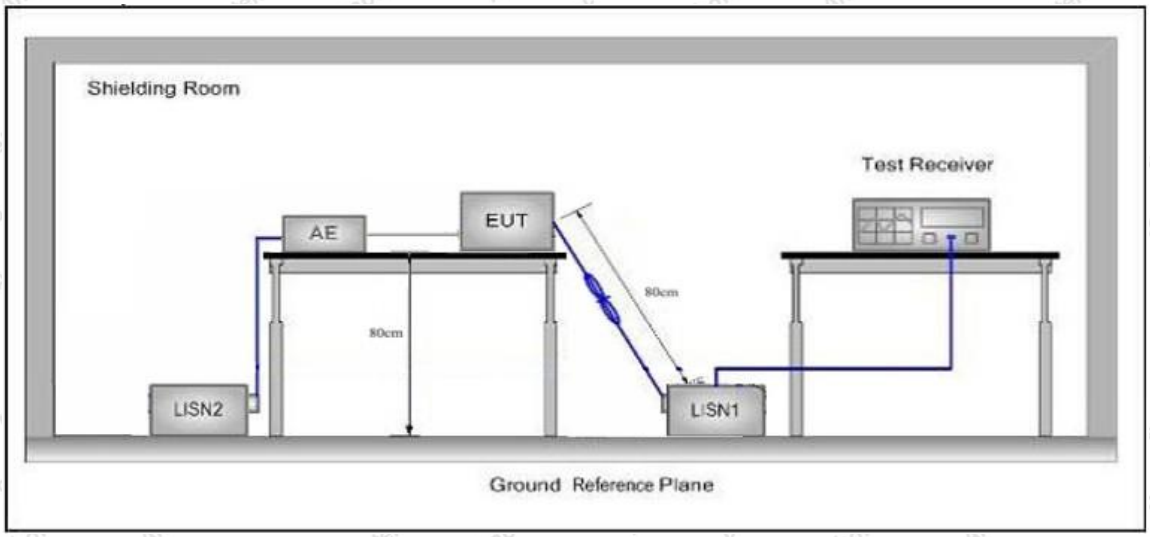

3.3. Test Procedure

The EUT system is connected to the power mains through a line impedance stabilization network (L.I.S.N.). This provides a 50ohm coupling impedance for the EUT system. Please refer the block diagram of the test setup and photographs. Both sides of AC line are checked to find out the maximum conducted emission. In order to find the maximum emission levels, the relative positions of equipment and all of the interface cables shall be changed according to FCC ANSI C63.10-2020 on Conducted Emission Measurement.

The bandwidth of test receiver (ESCI) set at 9kHz.

The frequency range from 150kHz to 30MHz is checked.

Shenzhen Anbotek Compliance Laboratory Limited
Address:1/F.,Building D,Sogood Science and Technology Park, Sanwei Community, Hangcheng Street, Bao'an District, Shenzhen, Guangdong, China.
Tel:(86) 0755-26066440 Fax:(86) 0755-26014772 Email:service@anbotek.com
Hotline 400-003-0500
www.anbotek.com.cn

3.4. Test Data

Please to see the following pages

Shenzhen Anbotek Compliance Laboratory Limited
Address:1/F.,Building D,Sogood Science and Technology Park, Sanwei Community, Hangcheng Street, Bao'an District, Shenzhen, Guangdong, China.
Tel:(86) 0755-26066440 Fax:(86) 0755-26014772 Email:service@anbotek.com
Hotline 400-003-0500
www.anbotek.com.cn

Conducted Emission Test Data

Test Site: 1# Shielded Room
Operating Condition: Mode 1
Test Specification: AC 120V, 60Hz for adapter
Comment: Live Line
Tem.: 24.1℃ Hum.: 48%

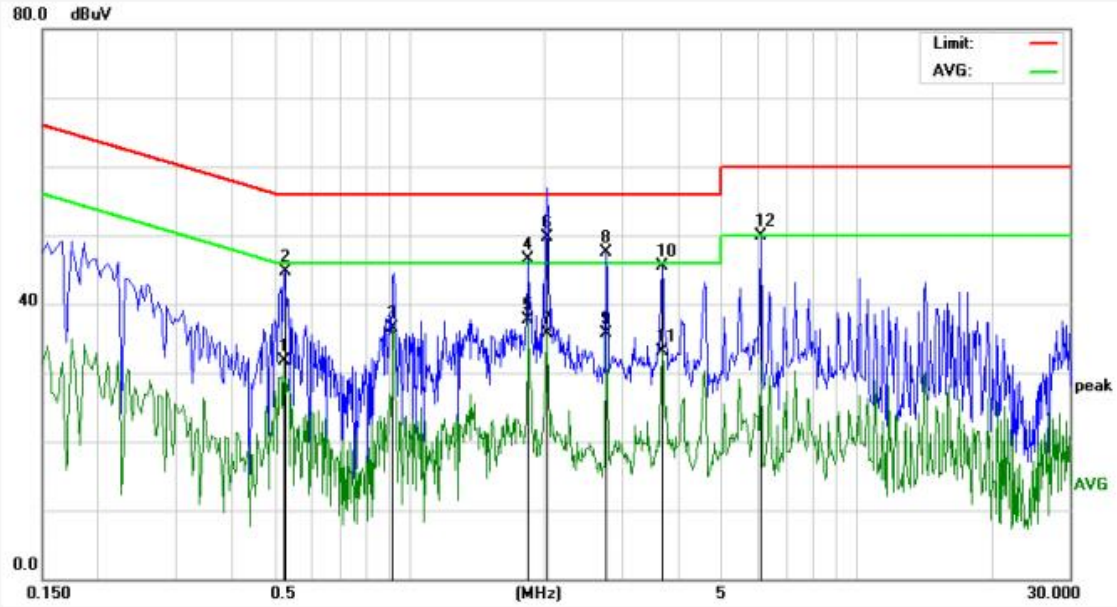

No.	Freq. (MHz)	Reading (dBuV)	Factor (dB)	Result (dBuV)	Limit (dBuV)	Over Limit (dB)	Detector	Remark
1	0.5220	31.53	0.15	31.68	46.00	-14.32	AVG	
2	0.5260	44.47	0.15	44.62	56.00	-11.38	QP	
3	0.9180	36.26	0.15	36.41	46.00	-9.59	AVG	
4	1.8420	46.34	0.12	46.46	56.00	-9.54	QP	
5	1.8420	37.65	0.12	37.77	46.00	-8.23	AVG	
6	2.0260	49.57	0.12	49.69	56.00	-6.31	QP	
7	2.0260	35.65	0.12	35.77	46.00	-10.23	AVG	
8	2.7500	47.36	0.12	47.48	56.00	-8.52	QP	
9	2.7500	35.55	0.12	35.67	46.00	-10.33	AVG	
10	3.6620	45.47	0.12	45.59	56.00	-10.41	QP	
11	3.6620	33.08	0.12	33.20	46.00	-12.80	AVG	
12	6.0939	49.79	0.11	49.90	60.00	-10.10	QP	

Shenzhen Anbotek Compliance Laboratory Limited
Address:1/F.,Building D,Sogood Science and Technology Park, Sanwei Community, Hangcheng Street, Bao'an District, Shenzhen, Guangdong, China.
Tel:(86) 0755-26066440 Fax:(86) 0755-26014772 Email:service@anbotek.com
Hotline 400-003-0500
www.anbotek.com.cn

Conducted Emission Test Data

Test Site: 1# Shielded Room
Operating Condition: Mode 1
Test Specification: AC 120V, 60Hz for adapter
Comment: Neutral Line
Tem.: 24.1℃ Hum.: 48%

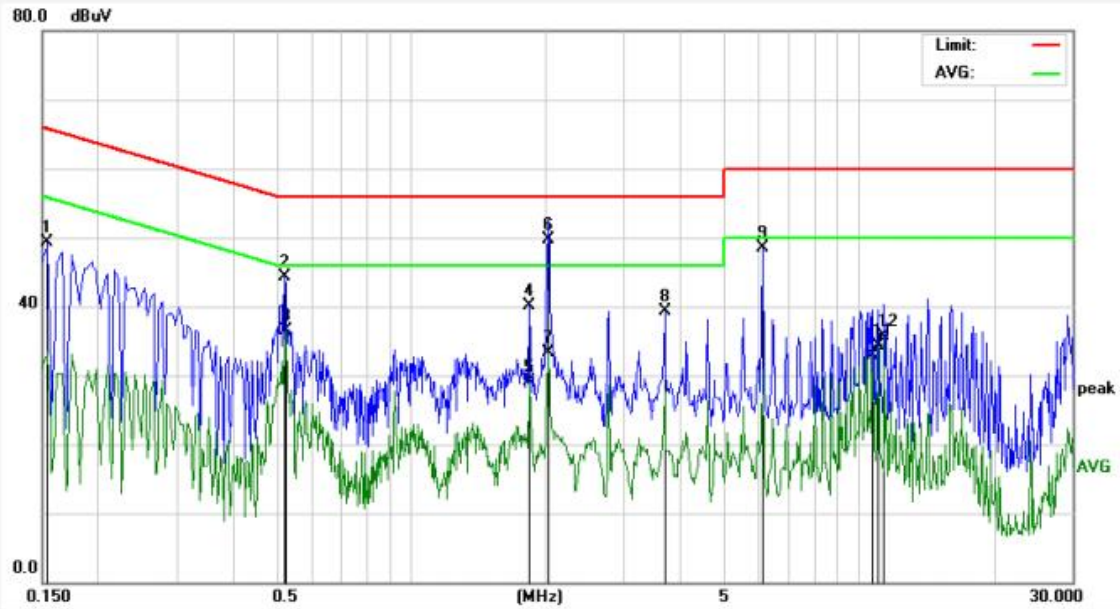

No.	Freq. (MHz)	Reading (dBuV)	Factor (dB)	Result (dBuV)	Limit (dBuV)	Over Limit (dB)	Detector	Remark
1	0.1539	49.21	0.12	49.33	65.78	-16.45	QP	
2	0.5220	44.11	0.15	44.26	56.00	-11.74	QP	
3	0.5260	36.44	0.15	36.59	46.00	-9.41	AVG	
4	1.8420	39.99	0.12	40.11	56.00	-15.89	QP	
5	1.8420	28.96	0.12	29.08	46.00	-16.92	AVG	
6	2.0260	49.68	0.12	49.80	56.00	-6.20	QP	
7	2.0260	33.12	0.12	33.24	46.00	-12.76	AVG	
8	3.6900	39.24	0.12	39.36	56.00	-16.64	QP	
9	6.0900	48.36	0.11	48.47	60.00	-11.53	QP	
10	10.7340	32.71	0.13	32.84	50.00	-17.16	AVG	
11	11.0740	34.18	0.13	34.31	50.00	-15.69	AVG	
12	11.4180	35.57	0.13	35.70	50.00	-14.30	AVG	

Shenzhen Anbotek Compliance Laboratory Limited
Address:1/F.,Building D,Sogood Science and Technology Park, Sanwei Community, Hangcheng Street, Bao'an District, Shenzhen, Guangdong, China.
Tel:(86) 0755-26066440 Fax:(86) 0755-26014772 Email:service@anbotek.com
Hotline 400-003-0500
www.anbotek.com.cn

4. Radiation Spurious Emission

4.1. Test Standard and Limit

Test Standard	FCC Part15 C Section 15.209 and 15.205				
Test Limit	Frequency (MHz)	Field strength (microvolt/meter)	Limit (dBuV/m)	Remark	Measurement distance (m)
	0.009MHz~0.490MHz	2400/F(kHz)	-	-	300
	0.490MHz-1.705MHz	24000/F(kHz)	-	-	30
	1.705MHz-30MHz	30	-	-	30
	30MHz~88MHz	100	40.0	Quasi-peak	3
	88MHz~216MHz	150	43.5	Quasi-peak	3
	216MHz~960MHz	200	46.0	Quasi-peak	3
	960MHz~1000MHz	500	54.0	Quasi-peak	3
	Above 1000MHz	500	54.0	Average	3
		-	74.0	Peak	3

Remark:
(1)The lower limit shall apply at the transition frequency.
(2) 15.35(b), Unless otherwise specified, the limit on peak radio frequency emissions is 20dB above the maximum permitted average emission limit applicable to the equipment under test. This peak limit applies to the total peak emission level radiated by the device.

4.2. Test Setup

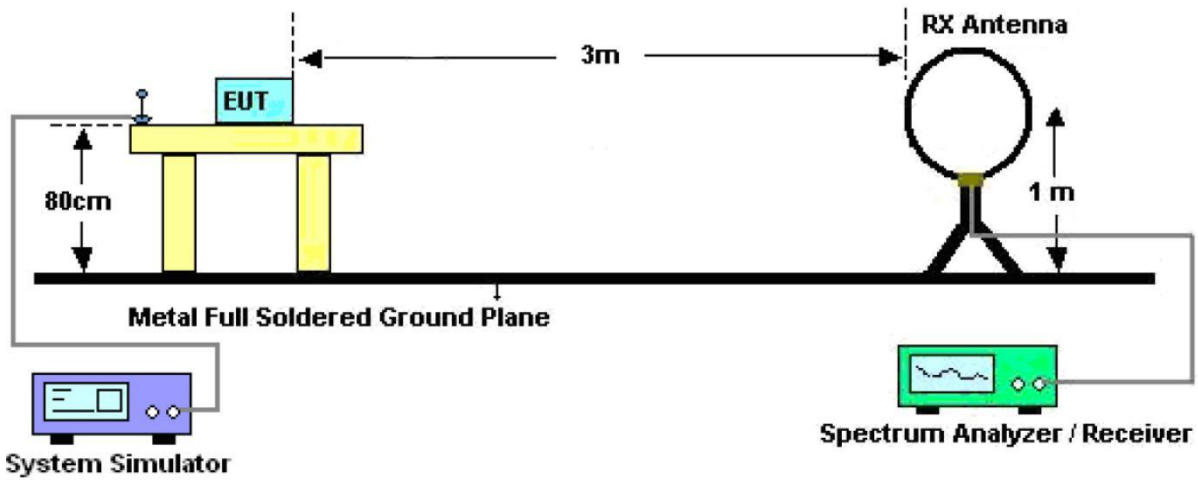

Figure 1. Below 30MHz

Shenzhen Anbotek Compliance Laboratory Limited
Address:1/F.,Building D,Sogood Science and Technology Park, Sanwei Community, Hangcheng Street, Bao'an District, Shenzhen, Guangdong, China.
Tel:(86) 0755-26066440 Fax:(86) 0755-26014772 Email:service@anbotek.com
Hotline 400-003-0500
www.anbotek.com.cn

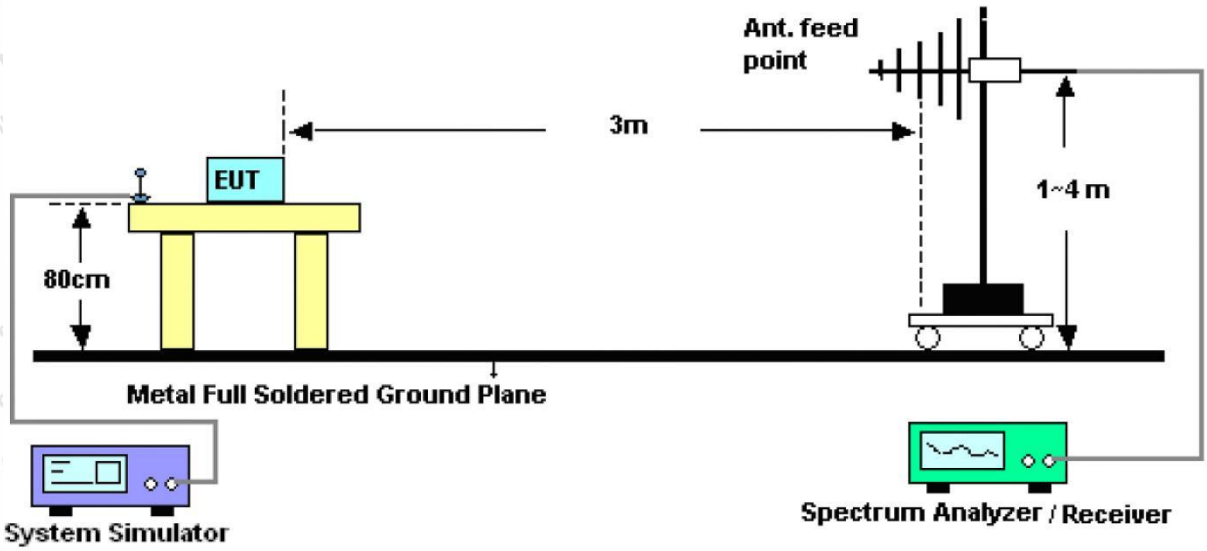

Figure 2. 30MHz to 1GHz

4.3. Test Procedure

For below 1GHz: The EUT is placed on a turntable, which is 0.8m above the ground plane.
The turn table can rotate 360 degrees to determine the position of the maximum emission level. The EUT is set 3 meters away from the receiving antenna which is mounted on a antenna tower. The antenna can be moved up and down from 1 to 4 meters to find out the maximum emission level. Rotated the EUT through three orthogonal axes to determine the maximum emissions, both horizontal and vertical polarization of the antenna are set on test. The EUT is tested in 9*6*6 Chamber. The device is evaluated in xyz orientation.

For 9kHz to 150kHz, Set the spectrum analyzer as:
RBW = 200Hz, VBW =1kHz, Detector= Quasi-Peak, Trace mode= Max hold, Sweep- auto couple.

For 150kHz to 30MHz, Set the spectrum analyzer as:
RBW = 9KHz, VBW =30kHz, Detector= Quasi-Peak, Trace mode= Max hold, Sweep- auto couple.

For 30MHz to 1000MHz, Set the spectrum analyzer as:
RBW = 100kHz, VBW =300kHz, Detector= Quasi-Peak, Trace mode= Max hold, Sweep- auto couple.

4.4. Test Data

PASS

Note: The data is in TX mode, and this is the worst mode.

Shenzhen Anbotek Compliance Laboratory Limited
Address:1/F.,Building D,Sogood Science and Technology Park, Sanwei Community, Hangcheng Street, Bao'an District, Shenzhen, Guangdong, China.
Tel:(86) 0755-26066440 Fax:(86) 0755-26014772 Email:service@anbotek.com
Hotline 400-003-0500
www.anbotek.com.cn

Test Results

(Between 9KHz – 30MHz)

Standard:	**FCC PART15 C _3m**	**Power Source:**	**AC 120V, 60Hz for adapter**
Test item:	**Radiation Test**	**Temp.(C)/Hum.(%RH):**	**22.4℃/49%RH**
Test Mode:	**Mode 1**	**Distance:**	**3m**

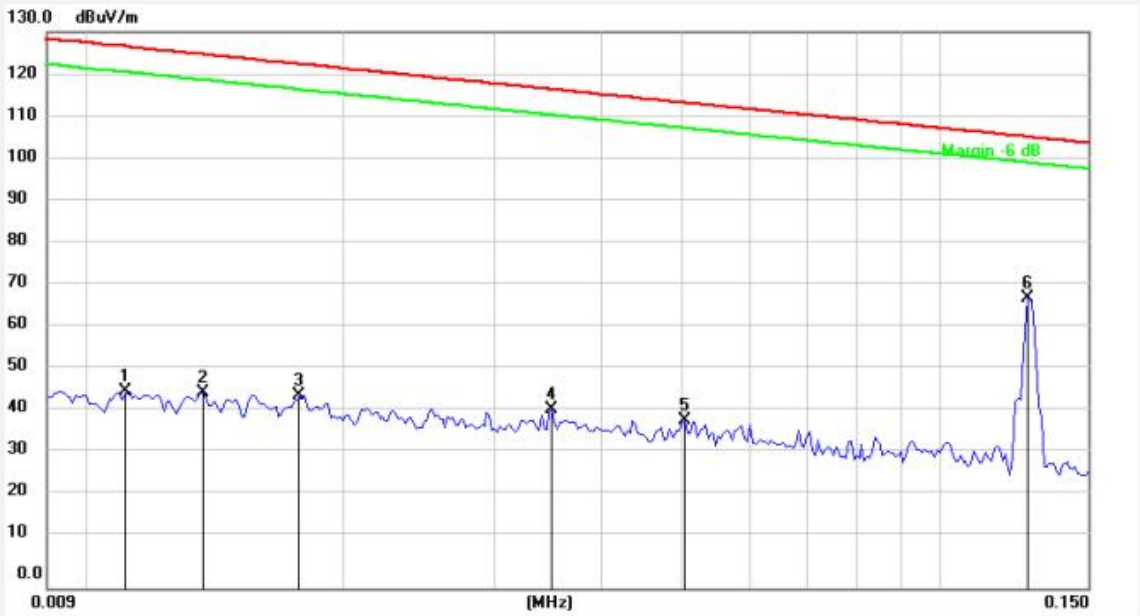

No.	Freq. (MHz)	Reading (dBuV)	Factor ()	Result (dBuV/m)	Limit (dBuV/m)	Over Limit (dB)	Detector	Height (cm)	degree (deg)	Remark
1	0.0111	25.79	20.07	45.86	126.59	-80.73	AV			
2	0.0137	25.44	20.17	45.61	124.77	-79.16	AV			
3	0.0177	24.87	20.15	45.02	122.55	-77.53	AV			
4	0.0352	21.23	20.48	41.71	116.60	-74.89	AV			
5	0.0504	18.83	20.41	39.24	113.49	-74.25	AV			
6	0.1275	47.43	20.34	67.77	105.45	-37.68	AV			

Shenzhen Anbotek Compliance Laboratory Limited
Address:1/F.,Building D,Sogood Science and Technology Park, Sanwei Community, Hangcheng Street, Bao'an District, Shenzhen, Guangdong, China.
Tel:(86) 0755-26066440 Fax:(86) 0755-26014772 Email:service@anbotek.com
Hotline 400-003-0500
www.anbotek.com.cn

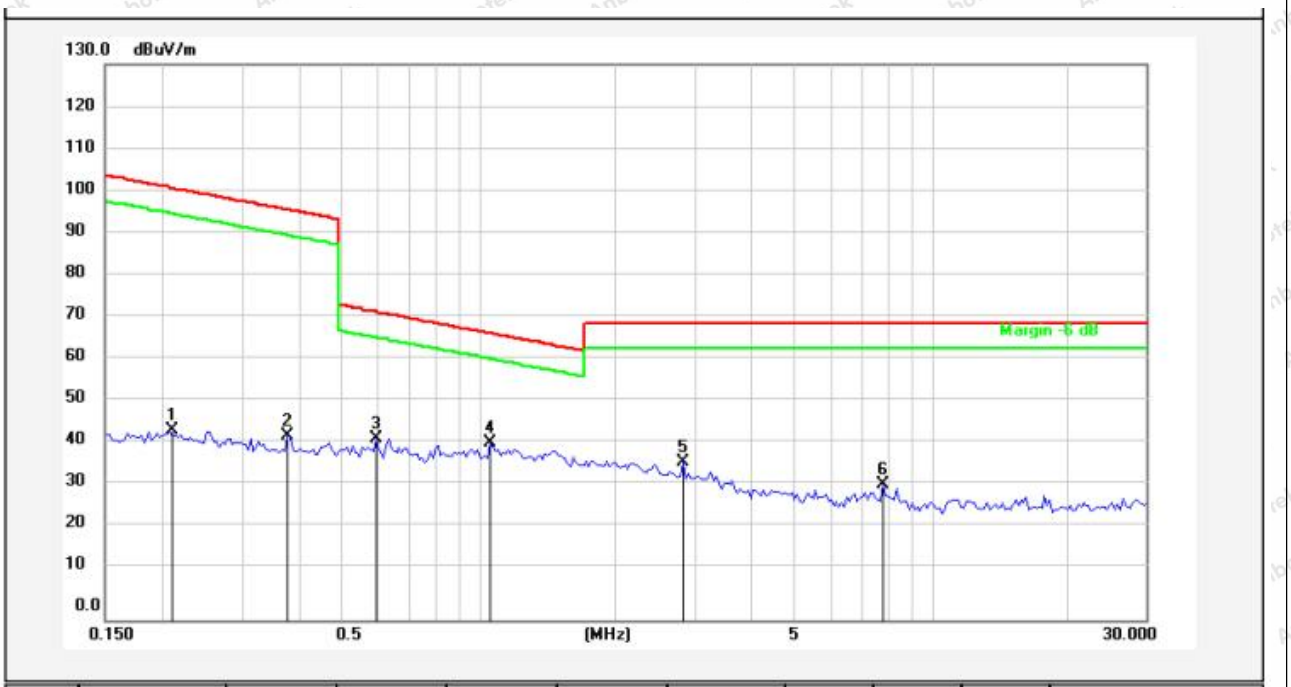

No.	Freq. (MHz)	Reading (dBuV)	Factor ()	Result (dBuV/m)	Limit (dBuV/m)	Over Limit (dB)	Detector	Height (cm)	degree (deg)	Remark
1	0.2089	24.04	20.31	44.35	101.18	-56.83	AV			
2	0.3790	22.68	20.28	42.96	96.02	-53.06	AV			
3	0.5947	22.16	20.27	42.43	72.12	-29.69	QP			
4	1.0648	21.05	20.25	41.30	67.08	-25.78	QP			
5	2.8389	16.49	20.30	36.79	69.50	-32.71	QP			
6	7.8723	11.20	20.50	31.70	69.50	-37.80	QP			

Remark: According to FCC PART 15.209 (d), the emission limits for the frequency bands 9–90 kHz, 110–490 kHz and above 1000 MHz, Radiated emission limits in these three bands are based on measurements employing an average detector.

Shenzhen Anbotek Compliance Laboratory Limited
Address:1/F.,Building D,Sogood Science and Technology Park, Sanwei Community, Hangcheng Street, Bao'an District, Shenzhen, Guangdong, China.
Tel:(86) 0755-26066440 Fax:(86) 0755-26014772 Email:service@anbotek.com
Hotline 400-003-0500
www.anbotek.com.cn

(Between 30MHz –1000 MHz)

Standard:	**FCC PART15 C _3m**	**Polarization:**	**Horizontal**
Test item:	**Radiation Test**	**Power Source:**	**AC 120V, 60Hz for adapter**
Test Mode:	**Mode 1**	**Temp.(C)/Hum.(%RH):**	**24.3℃/46%RH**
Distance:	**3m**		

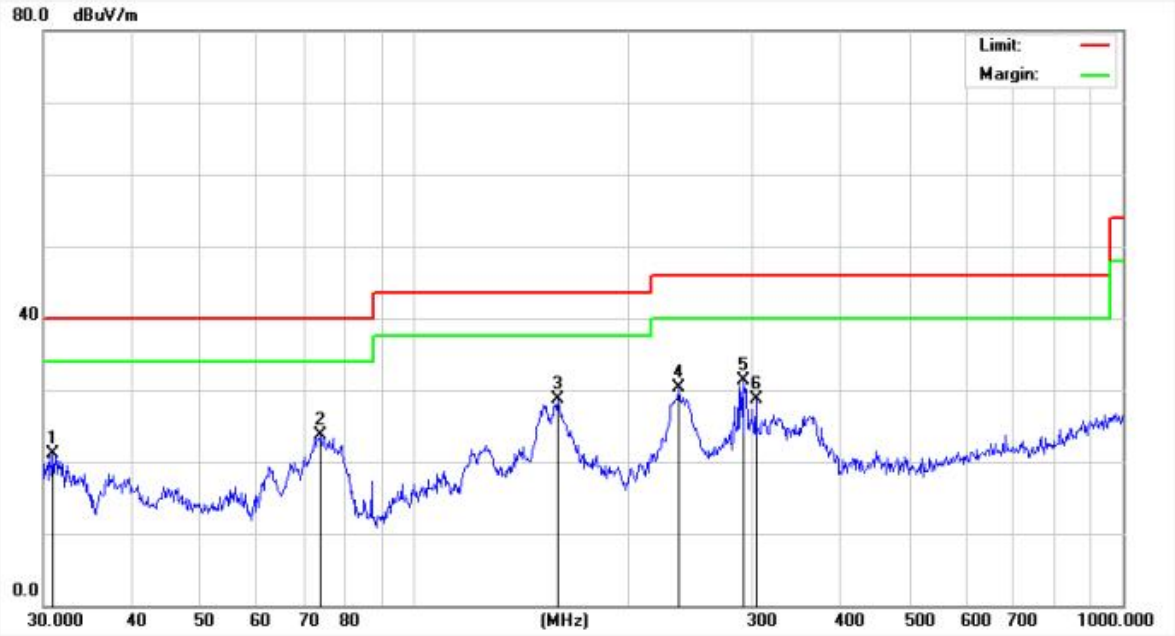

No.	Freq. (MHz)	Reading (dBuV)	Factor (dB/m)	Result (dBuV/m)	Limit (dBuV/m)	Over Limit (dB)	Detector	Height (cm)	degree (deg)	Remark
1	30.8535	41.03	-19.95	21.08	40.00	-18.92	QP			
2	73.6170	45.81	-22.06	23.75	40.00	-16.25	QP			
3	159.2251	52.58	-23.94	28.64	43.50	-14.86	QP			
4	236.6447	51.95	-21.71	30.24	46.00	-15.76	QP			
5	292.0583	49.10	-17.85	31.25	46.00	-14.75	QP			
6	303.5437	45.88	-17.08	28.80	46.00	-17.20	QP			

Shenzhen Anbotek Compliance Laboratory Limited
Address:1/F.,Building D,Sogood Science and Technology Park, Sanwei Community, Hangcheng Street, Bao'an District, Shenzhen, Guangdong, China.
Tel:(86) 0755–26066440 Fax:(86) 0755–26014772 Email:service@anbotek.com
Hotline 400–003–0500
www.anbotek.com.cn

Standard:	**FCC PART15 C _3m**	**Polarization:**	**Vertical**
Test item:	**Radiation Test**	**Power Source:**	**AC 120V, 60Hz for adapter**
Test Mode:	**Mode 1**	**Temp.(C)/Hum.(%RH):**	**24.3℃/46%RH**
Distance:	**3m**		

No.	Freq. (MHz)	Reading (dBuV)	Factor (dB/m)	Result (dBuV/m)	Limit (dBuV/m)	Over Limit (dB)	Detector	Height (cm)	degree (deg)	Remark
1	30.6379	47.49	-17.86	29.63	40.00	-10.37	QP			
2	45.0583	41.58	-15.06	26.52	40.00	-13.48	QP			
3	74.9191	50.78	-19.89	30.89	40.00	-9.11	QP			
4	158.1123	50.31	-21.74	28.57	43.50	-14.93	QP			
5	903.3094	32.30	-6.19	26.11	46.00	-19.89	QP			
6	952.0937	32.00	-5.61	26.39	46.00	-19.61	QP			

Shenzhen Anbotek Compliance Laboratory Limited
Address:1/F.,Building D,Sogood Science and Technology Park, Sanwei Community, Hangcheng Street, Bao'an District, Shenzhen, Guangdong, China.
Tel:(86) 0755-26066440 Fax:(86) 0755-26014772 Email:service@anbotek.com
Hotline 400-003-0500
www.anbotek.com.cn

5. Antenna Requirement

5.1. Test Standard and Requirement

Test Standard	FCC Part15 Section 15.203
Requirement	An intentional radiator shall be designed to ensure that no antenna other than that furnished by the responsible party shall be used with the device. The use of a permanently attached antenna or of an antenna that uses a unique coupling to the intentional radiator, the manufacturer may design the unit so that a broken antenna can be replaced by the user, but the use of a standard antenna jack or electrical connector is prohibited.

5.2. Antenna Connected Construction

The antenna is a Inductive loop coil Antenna which permanently attached, and the best case gain of the antenna is 0 dBi. It complies with the standard requirement.

Shenzhen Anbotek Compliance Laboratory Limited
Address:1/F.,Building D,Sogood Science and Technology Park, Sanwei Community, Hangcheng Street, Bao'an District, Shenzhen, Guangdong, China.
Tel:(86) 0755-26066440 Fax:(86) 0755-26014772 Email:service@anbotek.com
Hotline 400-003-0500
www.anbotek.com.cn

APPENDIX I -- TEST SETUP PHOTOGRAPH

Photo of Conducted Emission Measurement

Photo of Radiation Emission Test

Shenzhen Anbotek Compliance Laboratory Limited
Address:1/F.,Building D,Sogood Science and Technology Park, Sanwei Community, Hangcheng Street, Bao'an District, Shenzhen, Guangdong, China.
Tel:(86) 0755-26066440 Fax:(86) 0755-26014772 Email:service@anbotek.com
Hotline 400-003-0500
www.anbotek.com.cn

Shenzhen Anbotek Compliance Laboratory Limited
Address:1/F.,Building D,Sogood Science and Technology Park, Sanwei Community, Hangcheng Street, Bao'an District, Shenzhen, Guangdong, China.
Tel:(86) 0755-26066440 Fax:(86) 0755-26014772 Email:service@anbotek.com
Hotline 400-003-0500
www.anbotek.com.cn

APPENDIX II -- EXTERNAL PHOTOGRAPH

Please refer to the test report 18220WC10278701.

APPENDIX III -- INTERNAL PHOTOGRAPH

Please refer to the test report 18220WC10278701.

---------- End of Report ----------

Shenzhen Anbotek Compliance Laboratory Limited
Address:1/F.,Building D,Sogood Science and Technology Park, Sanwei Community, Hangcheng Street, Bao'an District, Shenzhen, Guangdong, China.
Tel:(86) 0755-26066440 Fax:(86) 0755-26014772 Email:service@anbotek.com
Hotline 400-003-0500
www.anbotek.com.cn