TREADMILL USER'S MANUAL

CAUTION

Read all precautions and instructions in this manual before using this equipment. Keep this manual for future reference.

MADE IN CHINA

Contents

I. IMPORTANT PRECAUTIONS.....(1)

II.MAIN TECHNICAL FEATURES ……..……..(3)

III. ASSEMBLY……..(4)

IV.TREADMILL OPERATION ……..(7)

V.MAINTENANCE.……..(11)

VI. COMMON ERRORS……..……(14)

VII.THE OBVIOUS DANGER LIST .....……(15)

VIII.WARRANTY……..(16)

IX.NOTE.....(17)

X.WORKOUT GUIDELINES.....(18)

I.IMPORTANT PRECAUTIONS

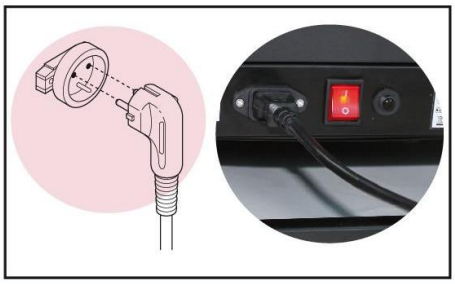

WARNING:	THE SECURITY KEY HAS A MAGNET WHICH MUST BE PUT IN THE DISPLAY. AT THE END OF THE LACE THERE IS A CLAMP WHICH SHOULD BE ATTACHED TO THE CLOTHES.THE TREADMILL WILL START WORKING ONLY IF THE KEY IS PLACED IN THE DISPLAY.THIS IS ESSENTIAL. A CORRECT LUBRICATION OF THE TREADMILL WITH SILICON OIL OR TEFLON IS REALLY IMPORTANT. THIS LUBRICATION MUST BE PERFORMED REGULARLY DEPENDING ON EACH PERSON, EVEN BEFORE ITS FIRST USE. YOU MUST PRESERVE THE ORIGINAL PACKAGING WITH ITS PROTECTIONS, PURCHASE RECEIPT, MANUAL AND COMPONENTS DURING THE GUARANTEE PERIOD.

In order to decrease the risk of suffering severe injuries, read carefully all the important instructions and warnings regarding the use of a treadmill before using it.

Our company doesn't take any responsibility for personal injuries or property damages resulting from the use of this product.

1-Before starting any workout programm, consult your doctor. It's specially important for people older than 35 years old, people with health problem and pregnant women.

2-The owner must ensure that all users are correctly informed about the warnings.

3-Use the equipment as explained in the instructions manual.

4-**Keep the equipment in an enclosed area, away from dust or humidity. Don't store it in a garage, indoor backyard or near the water. Humidity, dust and water could lead to a malfunction of the equipment, anulling its guarantee.**

5-Place the unit on a flat surface. If the surface is uneven, the proper functioning could be affected. Some models include levellers or levelling threads behind the legs, helping the levelling. Please read the manual to verify if your unit is provided with one of them..

6-The unit must be placed in a ventilated area. Don't use it in places with sprays or with oxygen dispenser. The air you breath may be affected and cause an accident.

7-Keep children younger than 12 years old and pets away from the equipment. Keep the security distance.

8-**Check in the manual the maximum weight your equipment can support. An excessive weight could lead to a malfunction in the operating system, which won't be covered by the guarantee.**

9-Wear suitable clothes and shoes. Do not use loose clothe that may get hooked.

10-If your equipment is working through a power supply: make sure that the power cord and plug are in good conditions. Carry out the connection only when the circuit has ground connection, otherwise it could cause damages on the equipment or in the property which the guarantee won't cover. Power cords must be away from hot surfaces.

11-If it is a battery-powered unit: check and make sure that they are charged enough so the display will fully function.

12-If your equipment is provided with a security key, please understand the produce before using it. The security key has a magnet which must be put in the display. At the end of the lace there is a clamp which should be attached to the clothes.The treadmill will start working only if the key is placed in the display.**THIS IS ESSENTIAL.**

13-If your unit works thanks to a power supply: don't put it into operation while you are on the belt. The motor would be innecesarily loaded. The right way is placing yourself with open legs, each one on a side of the belt and sit up once it is ongoing.

14-If your unit works with an electric supply: check the speed it can reach, for your security. The best is to adjust gradually the speed in order to avoid sudden changes.

15-**If your unit works through an electric supply: never leave the machine unattented while it's working. Take the security key off, turn the "on" button into "off" and unplug the power cord.**

16-If your equipment is provided with a pulse sensor, you may know it isn't a medical instrument. It's designed as a help for the workout and determines the tendencies of heart rates. There are some factors which could affect the accuracy of the heart rate interpretations, for example the movements of the user.

17-The machines don't take too much space as they can be folded. Once folded, make sure that all is well assembled to the locking system, either if it has a lock or an hidraulic engine. Don't try to move it or raise unless you are insured. Should any damage happen being the machine uninsured, it won't be covered by the guarantee.

18-**Check and tighten all screws on a regular basis, because due to vibrations screws and nuts tend to loosen. Damages caused by a lack of maintenance won't be covered by the guarantee.**

19-**A correct lubrication of the treadmill with silicon oil or teflon is REALLY IMPORTANT.** This lubrication must be performed regularly depending on each person, even before its first use.The lubrication must be carried out this way: disconnect the equipment of the electricity supply (in case you have one), pull up the tapestry from the side with one hand and spread the oil on the board. Please repeat this procedure from the other lateral side. Connect the equipment to the power supply (in case you have one) and turn the "on" button (red button) into the correct position (I), insert the security key and let the treadmill work for several minutes without any weight on it. Repeat this action on a regular basis.

20-**Two people will be needed in order to take the unit from the package. Otherwise, the damages caused in this moment won't be covered by the guarantee.**

21-Don't let any object fall into the grooves.

22-If the unit works through a power cord: unplug always the power cord before cleaning it, after the workout and before performing any maintenance duty.

23-This unit is designed for a domestic purpose and in an interior place, not for business environment or outside.

24-Do a workout with stretches before and after the sessions, you will avoid injuries.

25-Drink water before, during and after the workout.

26-If you start feeling pain or dizziness while training: **STOP IMMEDIATELY.**

27-**YOU MUST PRESERVE THE ORIGINAL PACKAGING WITH ITS PROTECTIONS, MANUAL AND COMPONENTS DURING THE GUARANTEE PERIOD.**

28-The accessories can be different to the other models.

29-This electronic product can't be thrown under any circumstances into the municipal rubbish bins. With the aim of preserving the environment, this product must be recycled according to the applicable law of your country. Please contact your town council to know more about this procedure.

30-Should you need technical assistance or advise with the installation of pieces, You can get in touch with us.

31.Clear safety area of at least 2000mm in length and at least as wide as the treadmill shall be provided behind the equipment when in use.

YOU MUST KEEP THE PURCHASE RECEIPT IN ORDER TO HAVE ACCESS TO THIS SERVICE

KEEP THESE ADVISES FOR FUTURE REFERENCES

II.MAIN TECHNICAL FEATURES

Input Voltage	110V±10%
Frequency	60 Hz
Running area	1230X420mm
Function	Time, Speed, distance, Calorie, heart rate, Bluetooth speaker,Bluetooth App
Speed Range	0.6-9MPH

III.ASSEMBLY

NOTICE:ASSEMBLY REQUIRES TWO PERSONS

Main part	Name	Q'ty
	1.Main frame	1set
	2.Plastic cover	1pair

1.Main

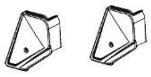

2.Plastic cover

No.	Fittings	Qnty	No.	Fittings	Qnty
①	M8*20	6	⑦	6mm Wrench	1
②	M8*45	2	⑧	Multi Wrench	1
③	ST4*15	2	⑨	Silicone oil	1
④	M8 Nut	2	⑩	User’s Manual	1
⑤	Flat washer	8	⑪	Security Key	1
⑥	5mmWrench	1			

STEP 1

1. Carry out the machine from the package by two persons and place it lightly on flat floor, and put other fittings beside the machine. Lift up the stand tube and electronic watch according to the picture(make sure not to press the signal wire)
2. One person hold the electronic watch steady and the other person puts **4PCS M8*20** and **2PCS M8X45** screw and fix them onto the stand tube with **FLAT WASHERS**.

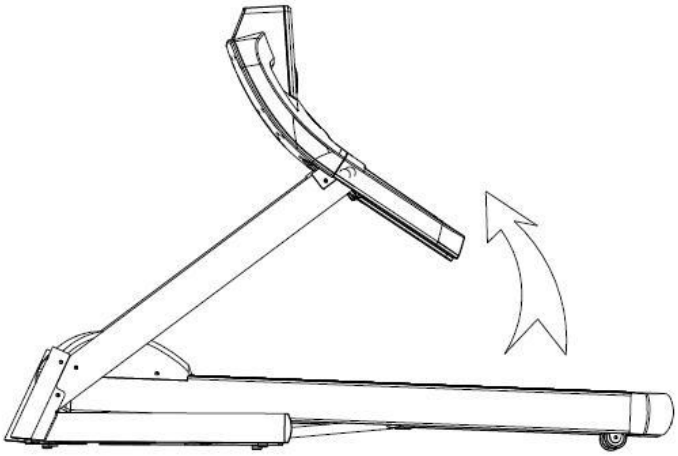

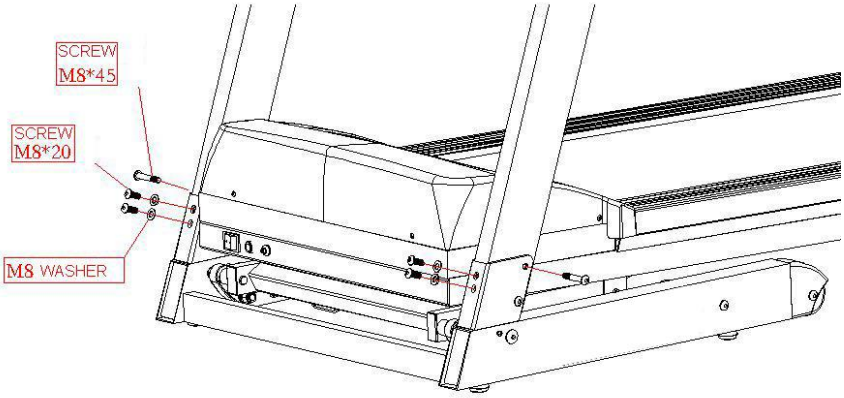

STEP 2

Use **2PCS M8*20** screws and **FLAT WASHERS** to screw up the left and right stand tube with the electronic watch.

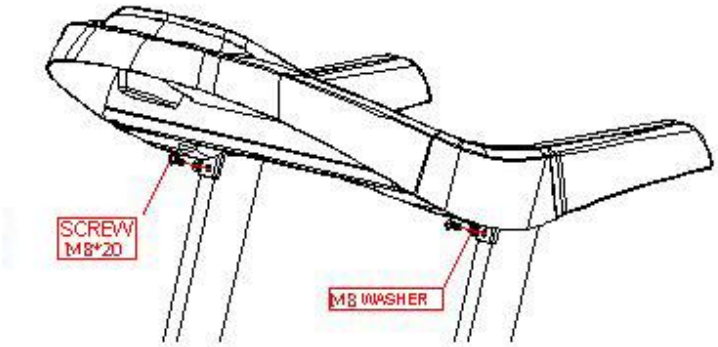

STEP 3

Use 2PCS ST4X15 screws to fasten the plastic cover at bottom of stand tube.

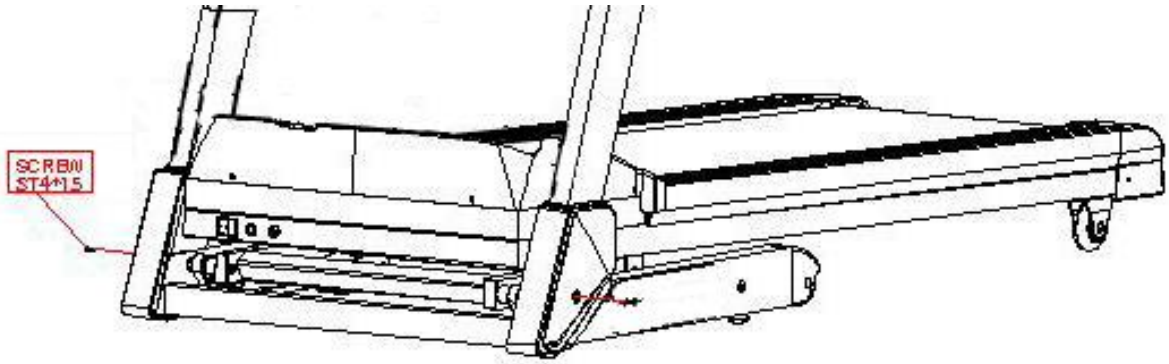

IV.TREADMILL OPERATION

HOW TO EXPAND AND MOVE THE TREADMILL

COMPUTER

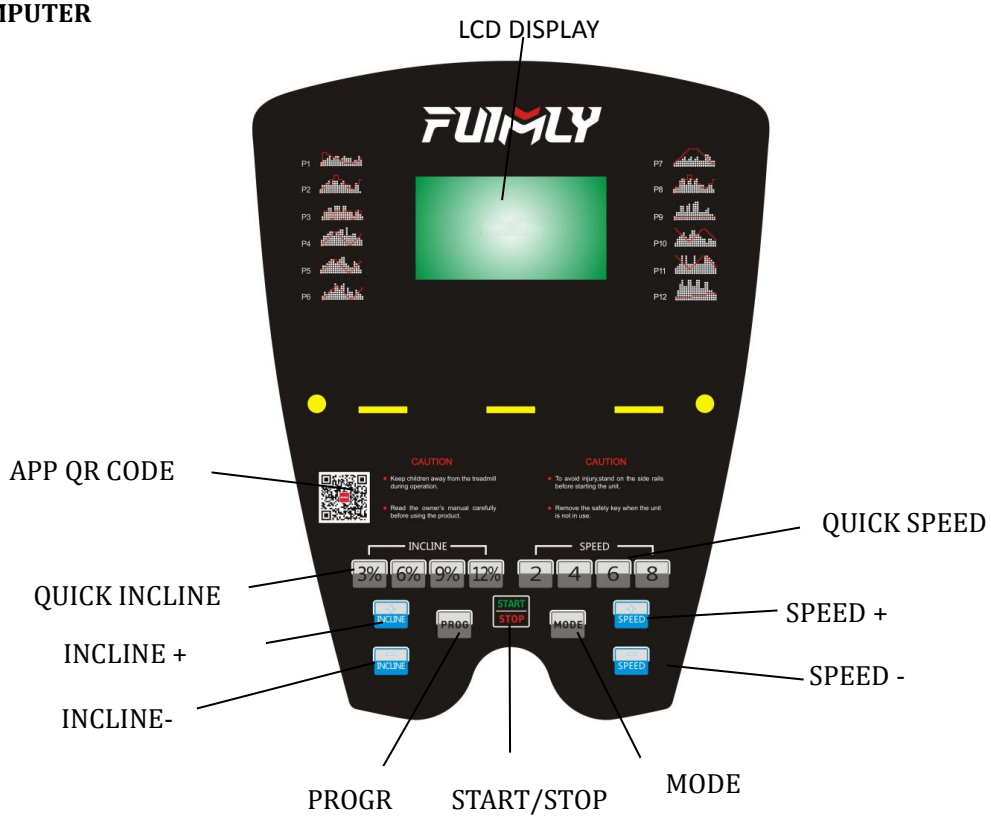

Manual

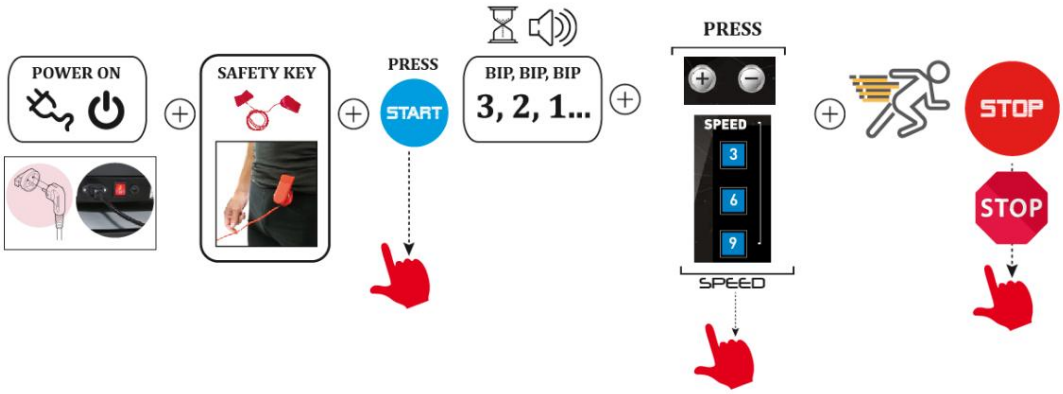
POWER ON
SAFETY KEY
PRESS
START
BIP, BIP, BIP
3, 2, 1...
PRESS
SPEED
3
6
9
SPEED
STOP
STOP

Mode

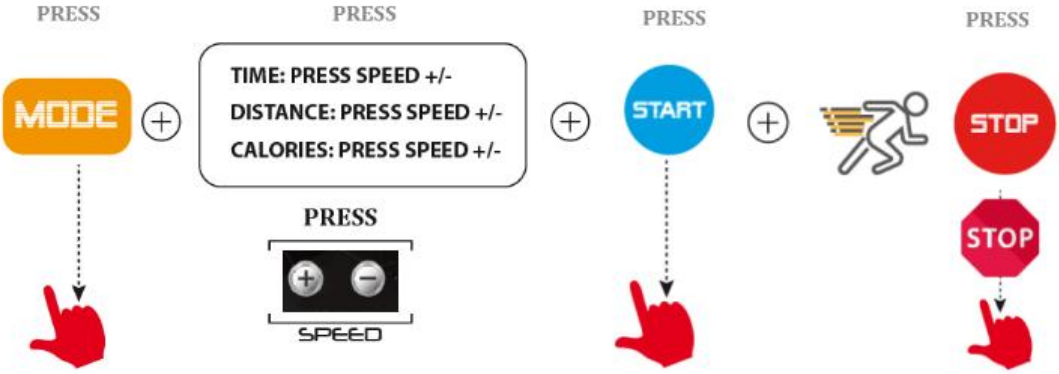
PRESS
MODE
PRESS
TIME: PRESS SPEED +/-
DISTANCE: PRESS SPEED +/-
CALORIES: PRESS SPEED +/-
PRESS
SPEED
PRESS
START
PRESS
STOP
STOP

Program

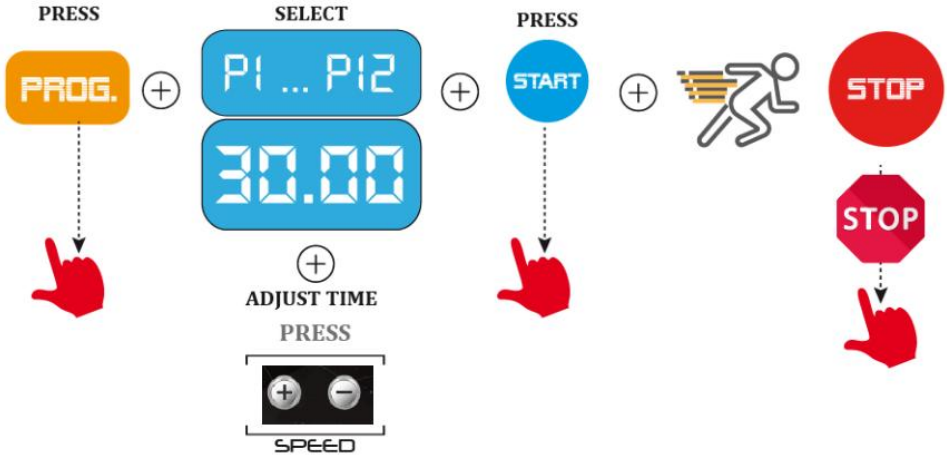

TIME / SECTION / PROGRAM		SETTING TIME / 20= EACH SECTION OPERATION TIME																			
		1	2	3	4	5	6	7	8	9	10	11	12	13	14	15	16	17	18	19	20
P01	SPEED	1.2	1.9	1.9	2.5	3.1	1.9	2.5	3.1	3.1	1.9	2.5	3.1	2.5	2.5	2.5	1.2	1.9	1.9	3.1	1.9
	INCLINE	0	7	7	6	6	5	5	4	4	3	3	2	2	2	2	2	2	3	3	4
P02	SPEED	1.2	2.5	2.5	3.1	3.7	2.5	3.7	3.7	3.7	2.5	3.1	3.7	2.5	2.5	2.5	1.2	1.2	3.1	2.5	0.6
	INCLINE	0	3	3	5	5	7	7	9	9	7	7	5	5	3	3	3	3	5	5	7
P03	SPEED	1.2	2.5	2.5	3.7	3.7	2.5	4.3	4.3	4.3	2.5	4.3	4.3	2.5	2.5	2.5	1.2	2.5	3.1	1.9	1.2
	INCLINE	0	5	5	5	1	1	5	5	5	1	1	5	5	5	1	1	5	5	5	1
P04	SPEED	1.9	3.1	3.1	3.7	4.3	4.3	3.1	4.3	4.3	5	5	3.1	5.6	3.1	3.1	3.7	3.7	2.5	2.5	1.9
	INCLINE	0	2	3	4	5	6	7	7	6	5	4	3	2	1	1	2	3	4	5	6
P05	SPEED	1.2	2.5	2.5	3.1	3.7	4.3	4.3	3.1	3.7	4.3	5	5	3.1	2.5	1.9	1.9	3.7	3.1	2.5	1.2
	INCLINE	0	2	3	4	5	6	7	7	6	5	4	3	2	1	1	2	3	4	5	6
P06	SPEED	1.2	2.5	1.9	2.5	3.1	2.5	5	4.3	3.1	4.3	5	1.9	3.7	2.5	2.5	1.2	3.1	2.5	1.9	1.2
	INCLINE	0	2	3	4	5	6	7	7	6	5	4	3	2	1	1	2	3	4	5	6
P07	SPEED	1.2	1.9	1.9	1.9	2.5	3.1	1.9	2.5	3.1	1.9	2.5	3.1	1.9	1.9	1.9	3.7	3.7	3.1	1.9	1.9
	INCLINE	2	3	4	5	6	7	8	9	9	9	9	9	8	7	6	5	4	3	2	2
P08	SPEED	1.2	1.9	1.9	3.7	4.3	4.3	2.5	3.7	4.3	2.5	3.7	4.3	2.5	2.5	1.2	1.2	1.9	2.5	2.5	1.2
	INCLINE	0	3	3	5	5	7	7	9	9	7	7	5	5	3	3	3	3	5	5	7
P09	SPEED	1.2	2.5	2.5	4.3	4.3	2.5	4.3	5	2.5	5	5.6	5.6	2.5	2.5	3.1	3.1	3.7	1.9	1.9	1.2
	INCLINE	0	2	2	2	2	2	2	2	2	2	2	2	2	2	2	2	2	2	2	2
P10	SPEED	1.2	2.5	3.1	3.7	4.3	3.1	2.5	3.7	5	5	3.7	3.7	3.1	2.5	1.2	1.2	2.5	2.5	1.9	1.9
	INCLINE	9	8	7	6	5	4	3	3	4	5	6	7	8	9	9	8	7	6	5	4
P11	SPEED	1.9	2.5	3.1	5.6	3.1	5.6	3.1	3.1	3.1	5.6	3.1	3.1	3.1	3.1	5.6	5.6	5	4.3	3.7	1.9
	INCLINE	9	8	7	6	5	4	3	3	4	5	6	7	8	9	9	8	7	6	5	4
P12	SPEED	1.2	3.1	5	6.2	4.3	4.3	6.2	4.3	4.3	4.3	6.2	6.2	3.7	3.7	5.6	5.6	3.1	3.1	2.5	1.9
	INCLINE	2	2	2	2	2	2	2	2	3	3	3	3	3	3	3	4	4	4	4	4

Bluetooth speaker to play music

Bluetooth APP-- SCAN RQ code on panel sticker or search SPAX/ZWIFT at APP store or Google play to download APP

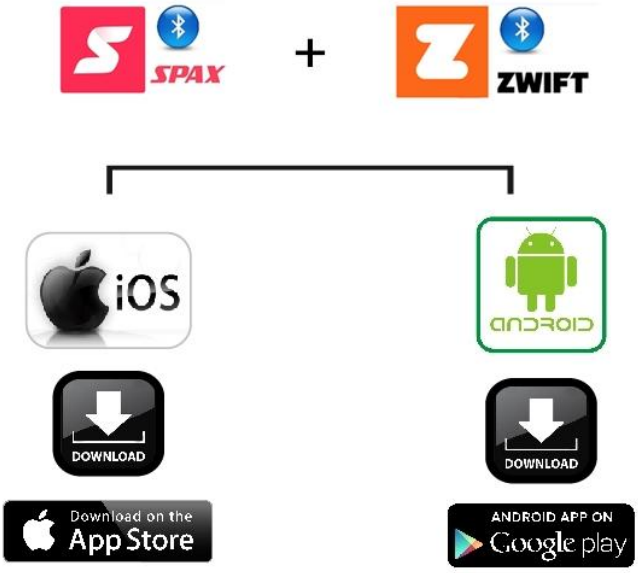

Constitutioon test

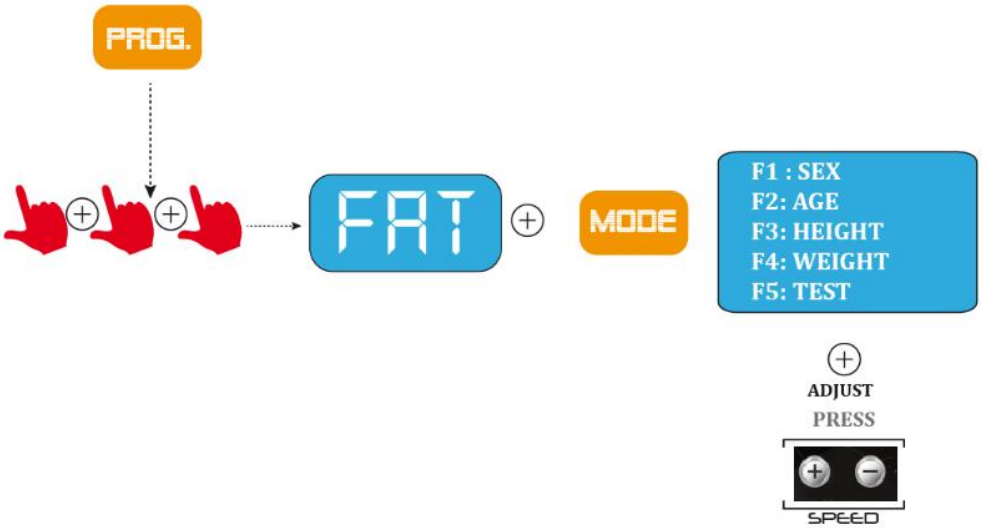

01	Sex	01 M	02 F
02	Age	10------99	
03	Height	100----240	
04	Weight	20-----160	
05	FAT	≤19	Underweight
	FAT	=(20---25)	Normal weight
	FAT	=(25---29)	Overweight
	FAT	≥30	Obesity

V. MAINTENANCE

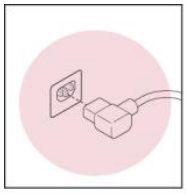

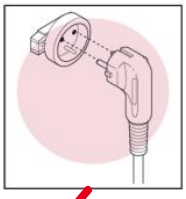

This product must be earthed. If the power cord is damaged,it must be replaced with a manufacturer recommended power cord.

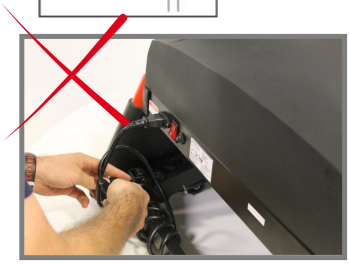

DO NOT TANGLE THE POWER CORD

REGULAR MAINTENANCE OF THE TREADMILL

- **STORAGE:** Keep your equipment in a enclosed place, away from dust or humidity. Don't store it neither in a garage or in a indoor backyard, or near the water. Humidity, dust and water could damage it and have an effect on its functioning
- **ELECTRIC CABLE:** Make sure that the cable and plug are in perfect conditions. Electric cables must be away from hot surfaces
- **SCREWS AND CONNECTING CABLES:** Supervise and tighten the screws on a regular basis, because due to the vibration the screws and nuts tend to loosen.

LUBRICATION: It's a correct lubrication of the treadmill with silicon oil or teflon is really important. This lubrication must be performed regularly depending on its use even before the first use.There is a hole for adding oil on motor cover. After starting machine, please change to highest speed, then add the oil into the hole, the oil will be spread from the middle between the running belt and board.

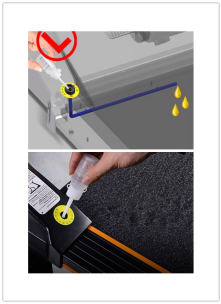

-

< 3 hours/week	2 months
4 – 7 hours/week	1 month
> 8 hours/week	15 days

- **ALIGN AND TIGHTEN THE BELT OF THE TREADMILL**

- **ALIGN THE BELT:** Due to its use, the belt can move off center. If the belt has moved to the left, start treadmill and increase the speed to 3MPH .Use the 6mm Wrench to turn the fixed left bolt clockwise or turn the fixed right bolt counterclockwise. Don't tighten the belt too much in order to be able to walk. Repeat this procedure until the belt is properly aligned.

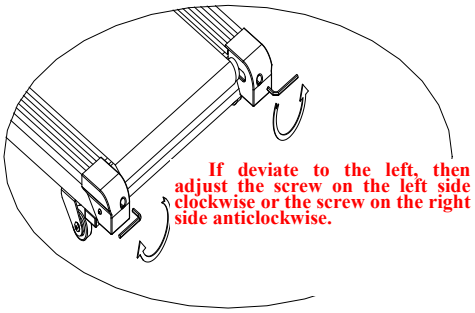

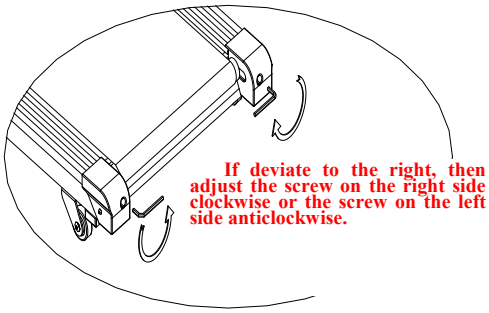

- **TIGHTEN THE BELT:** (if the belt slips on the treadmill when walking). Start treadmill and increase the speed to 3MPH.Using the 6mm Wrench , turn both bolts 1/4 clockwise. If the belt is properly tight to walk, you must be able to pull up each side of the belt 5 or 7 cm off the platform. Be careful and maintain the belt aligned. Repeat this procedure until the belt is properly tightened.

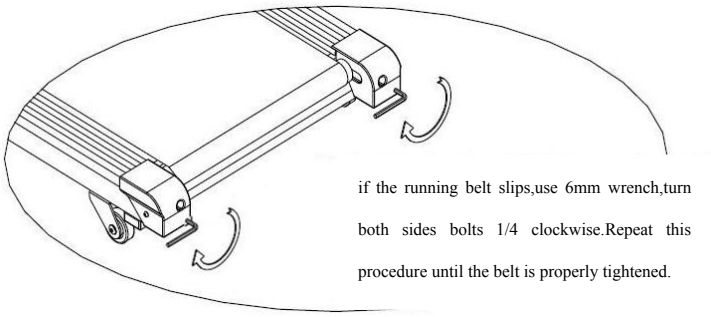

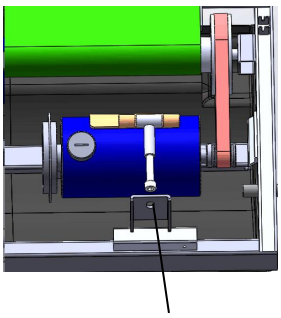

- **TIGHTEN THE DRIVE BELT:**if the drive belt becomes loose after using for a period of time,you need to:
  (1) Open the motor cover .
  (2) Use the 6mm wrench to turn the adjusting bolt clockwise.

Repeat this procedure until the drive belt is not slippery anymore.

- **CLEANING:** Don't use abrasive products. A damp cloth is enough.
- **LEVELING:** If your unit is provided with leveling wheels, please adjust them in order to avoid vibrations and therefore malfunctions.
- **KEEP THESE MAINTENANCE ADVISES FOR FUTURE REFERENCES**

VI.COMMON ERRORS :

ERRO CODE		REASON	HOW TO SOLVE
NO DISPLAY		A) electricity not connected	Connect the electricity
		B) power switch not turn on	Turn on power switch
		C) pcb no power or broken	Press over-load protector or change new pcb
		D) signal wire not connected	Re-connect signal wire or change new one
		E) computer broken	Change new computer
		F) background light broken	Check background light wire or change new one
NOT DISPLAY ALL INFORMATION		A) display drive IC not inserted well	Re-insert IC,and re-weld it or change new one
		B) EMI gasket slip, not well fastened	Re-assemble screen
NOT RUN SMOOTHLY		A) driving position has resistance	Adjust driving position, or add some silicon oil
		B) running belt too tight or too loose	Adjust the belt tension
		C) pcb torque too big or too small	Ajust torque to right position
	---OR---- (OR E00/E07)	A) safety key off	Put on safety key
		B) magnetron not fixed well	Fix magnetron to right position
	E01/E13	A) signal wire not well connected	Re-connect signal wire
		B) signal wire broken	Change new signal wire
		C) signal wire broken	Change new computer
		D) pcb broken	Change new pcb
	E02	A) motor wire not well connected, or open	Re-connect motor wire or change new motor
		B) IGBT on pcb broken	Change new pcb
		C) input voltage too low	Stop using, ask electrician to check
	E03	A) speed signal wire not well connected, or	Re-connect speed signal wire or change new sensor
		B) pcb broken	Change new pcb
	E04	A) incline motor wire not well connected	Re-connect incline motor wire
		B) incline motor broken	Change new incline motor
		C) pcb broken	Change new pcb
	E05	A) over-loaded	Turn off and re-start machine
		B) driving position hinder	Adjust driving position, or add oil
		C) motor short circuit	Change new motor
		D) pcb burnt	Change new pcb
	E06	A) motor wire not well connected	Re-connect motor wire
		B) motor open circuit	Change new motor
		C) motor idling	Re-assemble to test
	E08	A) storage IC not well inserted	Re-insert IC, pay attention to pins
		B) storage IC broken, or pcb broken	Change new IC, or change new pcb
	E09	A) machine stand or not put evenly on	Put evenly on floor
		B) pcb broken	Change new pcb
	E10	A) pcb torque too big	Adjust torque to right position
		B) motor short circuit	Change new motor
		C) driving position hinder	Adjust driving position, or add oil
	E11	Input voltage too big	Stop using, ask electrician to check
	E14	Input voltage too low	Stop using, ask electrician to check

VII. THE OBVIOUS DANGER LIST

No.	Description	Associated
1.	Mechanical Hazards	
1.1	Crushing	Inclining
		Folding
1.2	Shearing	Inclining
		Folding
1.3	Drawing-in Or Trapping	Rear roller
		Drive system
1.4	Falling	Sudden starts/stops
		Excessive speed variation
		Support failure
1.5	Abrasion	Contact with moving running surface
1.6	Slippery Surface	Slipping and falling
1.7	Stored Energy	Folded treadmills falling down
		Springs or elastic devices prior to assembly
2.	Electrical Hazards	
2.1	Electrocution	Contact with live components
3.	Thermal Hazards	
3.1	Burns	Contact with hot surfaces
4.	Hazards generated by neglecting ergonomic principles in design process	
4.1	Ineffective ergonomics	Size or location of support surfaces
		Running surface dimensions
4.2	Human errors human behaviour	Reasonably foreseeable misuse
5.	Noise Hazards	
5.1	Disturbing acoustic communication	Moving treadmill motor and belt

A correct lubrication of the treadmill with silicon oil or teflon is REALLY IMPORTANT.
This lubrication MUST BE PERFORMED REGULARLY DEPENDING ON EACH PERSON, EVEN BEFORE ITS FIRST USE.
YOU MUST PRESERVE THE ORIGINAL PACKAGING WITH ITS PROTECTIONS, PURCHASE RECEIPT, MANUAL AND COMPONENTS DURING THE GUARANTEE PERIOD.

VIII.WARRANTY

We have one year quality warranty to the products. Within the warranty period, we provide the FREE replacement parts. If caused by incorrect assembly, incorrect use or change of parts failures, our company takes no responsibility. You should show our products series no. and relative pictures or information before getting the warranty.
This treadmill is only for home use, if the problems occurred by commercial used, our company takes no responsibility.

IX.NOTE

FCC Warning Statement

This equipment has been tested and found to comply with the limits for a Class B digital device, pursuant to Part 15 of the FCC Rules. These limits are designed to provide reasonable protection against harmful interference in a residential installation.
This equipment generates, uses and can radiate radio frequency energy and, if not installed and used in accordance with the instructions, may cause harmful interference to radio communications.

However, there is no guarantee that interference will not occur in a particular installation. If this equipment does cause harmful interference to radio or television reception, which can be determined by turning the equipment off and on, the user is encouraged to try to correct the interference by one or more of the following measures:

Reorient or relocate the receiving antenna.
Increase the separation between the equipment and receiver.
Connect the equipment into an outlet on a circuit different from that to which the receiver is connected.
Consult the dealer or an experienced radio/TV technician for help.

Warning: Changes or modifications to this unit not expressly approved by the part responsible for compliance could void the user's authority to operate the equipment.

FCC Radiation Exposure Statement

The device has been evaluated to meet general RF exposure requirement. The device can be used in portable exposure condition without restriction.

This device complies with Part 15 of the FCC Rules. Operation is subject to the following two conditions:

(1)This device may not cause harmful interference, and
(2)This device must accept any interference received, including interference that may cause undesired operation.

X.WORKOUT GUIDELINES

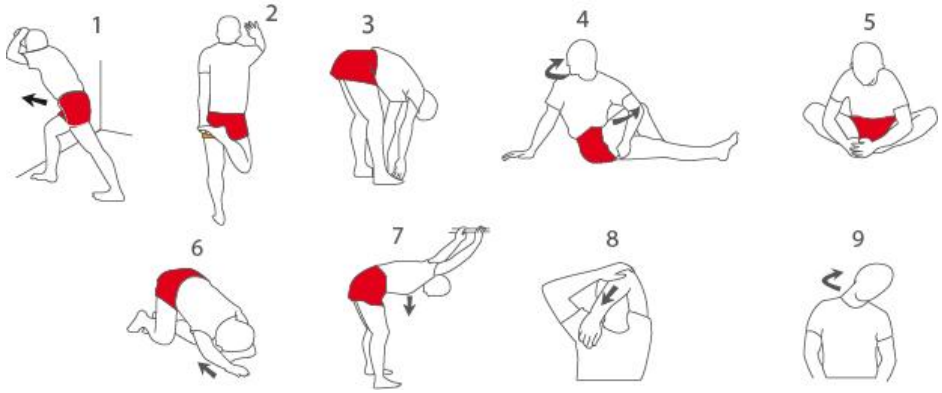

BEWARE: Before starting to use this or any exercise programs, consult your doctor. This is specially important for people older than 35 years old, or for people with health problems.

If your equipment is provided with a pulse sensor, you must keep in mind this isn't a medical instrument. Several factors can vary the accuracy of the heart rate interpretations. The pulse sensor is just a help for the work outs, determining the general tendences of the heart rate.

PROGRAMM WITH WARM UP WORKOUTS:

WARM UP: Start stretching and slightly activating the muscles between 5 and 10 minutes. The warm up will increase your corporal temperature, your heart rate and your blood flow, making you ready for the workouts.

- **WORKOUT FOCUSED ON THE TRAINING AREA:** Do some exercises during 20-30 minutes with your heart rate (don't maintain your heart rate more than 20 minutes during the first weeks of the exercise program). Breath constantly and deeply during the workout (never hold your breath).
- **COOL DOWN:** Finish with stretching exercises during 5-10 minutes. Stretching increases the flexibility of your muscles and help you to avoid injuries after the workouts.

FREQUENCY OF THE WORKOUT: In order to be fit or improve your shape, complete three workout sessions each week, with a rest day between the workouts. After some moths of regular training, you will be able of completing up to five workouts a week.

MADE IN CHINA