车载无线充

A18

使用说明书

1 包装清单及参数说明

产品名称：车载支架无线充电器(智能感应)

功率: 15W,10W,7.5W, 5W

有效传输距离: 1-8mm

产品尺寸: 132mm×82mm×49mm

充电接口： Type C

包装清单:

车载支架×1, 说明书×1

数据线×1车载出风口底座(夹子)×1

磁吸头×3（苹果，Type-C,安卓）

2 功能组件

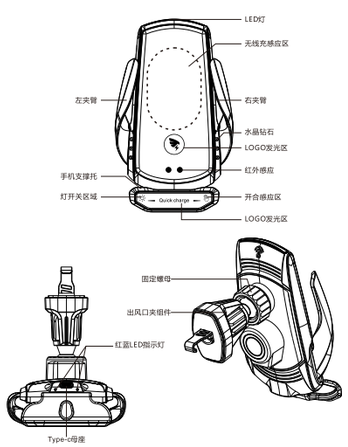

3 规格参数

1. 型号：A18
2. 颜色：红 色/银 色/金 色/镈 色
3. 重量：产品净重约112.7g
4. 材质：PC+ABS真空镀
5. 磁吸头输入电压：DC 5V/2A
6. 输入电压/电流: 5V/2A,9V/1.67A,12V/1.5A
7. 输出功率: 15W、10W、7.5W、5W自动识别
8. 充电功率: 110K-205KHz
9. 支持规格：符合QI无线协议充电
10. 部份支持无线快充设备

苹果：Iphone8/8P/X/XS/XSmax/11/11Pro/11Promax

华为：Mate RS/Mate20 Pro/Mate20 RS/P30 Pro/P40 Pro

三星：S7/S7 edge/S8/S8+/S9+/S10

小米：MIX2S/MIX3/NI9/10

11. 不支持无线充电的设备需要配合对应磁吸公头方可充电

4 使用说明

1.使用时将车载无线充设备连接适配的数据线.

2.将数据线的USB端连接车上的可充电接口(如：点烟器转换充电器和车上USB充电接口).

3.设备接通电DC5V-12V电源后，设备接通DC5V-12V电源后，设备会自动夹紧伸缩臂一次，同时蓝色指示灯亮起并转红色指示灯长亮，此时设备进入正常待机状态。当物体正面靠近设备5CM-20CM时，设备自动感应张开双臂，放入手机后，设备自动夹紧手机，此时无线充将对手机自动充电，充电时设备蓝色指示灯（呼吸灯）亮起。（需具备无线充电功能手机）。当需要取出手机时，需要手触摸设备正面感应区，设备会自动张开双臂，取走手机。

4.本设备有过压保护，过温保护，磁场保护, 短路保护，如设备出现异常时，会自动停止工作.

5 注意事项

1.请勿过度挤压或碰撞设备。

2.请勿在严重高温，潮湿或腐蚀性环境下使用无线充电器，避免损坏设备的电路

感谢您对本产品的使用！

Car Wireless Charger

A18

Instruction Manual

1.Car Wireless Charger Manual

Product Name: Car stand wireless charger

(Intelligent sensing)

Power: 15W, 10W, 7.5W , 5W

Effective transmission distance: 1-8mm

Product size:132mm×82mm×49mm

Charging interface: Type C

Packing list:

Car bracket x 1, Manual X1,

Data line×1, Car outlet base(clip)×1

Magnetic head×1 (Iphone, type-C, Android)

2.Functional components

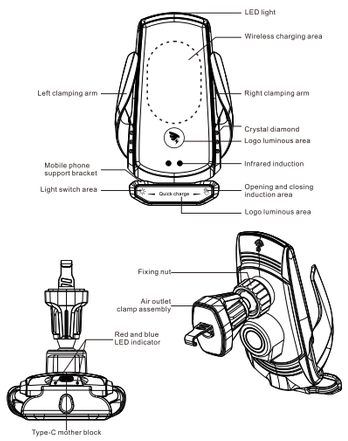

3. Specifications

1. Model: A18
2. Color: Red/Tarnish/Gold/Silver
3. Weight: product net weight about 112.7g
4. Material: PC+ ABS Vacuum Plating
5. Input voltage of magnetic head: DC 5V/2A
6. Input voltage/current: 5V/2A, 9V/1.67A, 12V/1.5A
7. Output power: 15W,10W, 7.5W, 5W automatic identification
8. Charging power: 110K-205K Hz
9. Support Specifications: Qualified with QI Wireless Protocol Charging
10. Some support wireless fast charging equipment

IPHONE:Iphone8/8P/X/XS/XSmax/11/11Pro/11Promax

HUAWEI:Mate RS/Mate20 Pro/Mate20 RS/P30 Pro/P40 Pro

SAMSUNG:S7/S7 edge/S8/S8+/S9+/S10

XIAOMI:MIX2S/MIX3/NI9/10

11. Devices that do not support wireless charging can only be recharged by cooperating with the corresponding magnetic plug

4. Instructions For Use

1.Connect the vehicle's wireless charging device to the appropriate data cable when using it.

2.Connect the USB port of the data cable to the charging interface on the car(eg,cigarette lighter switching charger and USB charging port on the car.

3.After the equipment is powered on with DC5V-12V power supply and DC5V-12V power supply, the equipment will automatically clamp the telescopic arm once, and the blue indicator light will turn on and turn red, and the indicator light will be on for a long time. At this time, the device enters the normal standby state. When the front of the object is 5cm-20cm close to the device, the device will automatically open its arms. After putting the mobile phone into the device, the device will automatically clamp the mobile phone. At this time, the wireless charging will automatically charge the mobile phone. When charging, the blue indicator light (breathing light) of the device will be on. (mobile phone with wireless charging function is required). When you need to take out the mobile phone, you need to touch the front sensing area of the device, and the device will automatically open its arms and take it away.

4.This device has over-voltage protection,over-temperature protection,magnetic field protection,short-circuit protection if the device is abnormal,it will automatically stop working.

5. Precautions

1. Do not over-squeeze or hit the device

2. Do not use the wireless charger under severe high temperature, humidity or corrosive environment to avoid damaging the device's circuit

Thank You For Using This Product

FCC WARNING

This device complies with part 15 of the FCC Rules. Operation is subject to the following two conditions: (1) this device may not cause harmful interference, and (2) this device must accept any interference received, including interference that may cause undesired operation.

Any changes or modifications not expressly approved by the party responsible for compliance could void the user's authority to operate the equipment.

NOTE: This equipment has been tested and found to comply with the limits for a Class B digital device, pursuant to Part 15 of the FCC Rules. These limits are designed to provide reasonable protection against harmful interference in a residential installation. This equipment generates, uses and can radiate radio frequency energy and, if not installed and used in accordance with the instructions, may cause harmful interference to radio communications. However, there is no guarantee that interference will not occur in a particular installation.

If this equipment does cause harmful interference to radio or television reception, which can be determined by turning the equipment off and on, the user is encouraged to try to correct the interference by one or more of the following measures:

-- Reorient or relocate the receiving antenna.

-- Increase the separation between the equipment and receiver.

-- Connect the equipment into an outlet on a circuit different from that to which the receiver is connected.

-- Consult the dealer or an experienced radio/TV technician for help.

To maintain compliance with FCC’s RF Exposure guidelines, This equipment should be installed and operated with minimum 20cm distance between the radiator and your body: Use only the supplied antenna.