Antenna specification

Antenna Sample Confirmation From

Name of supplier	ShenZhen Aihui Technology Co., Ltd				
Customer name	Le Chang				
Sample name	PT26-DT68TX				
model					
Sample size					
Inspection item	**Performance test**	**Visual inspection**	**Structure**	**In the news**	**Test results**
Notes					
Quality Audit		Project Audit		Business confirmation	
The following is to be completed by the client					

Address: 402TEL: 0755-23203435fax: 0755-23203435, Block C, Juxin Science and Technology Industrial Park, Nanchang community, xixiang, Baoan District, Shenzhen

Customer feedback	
Customer signature/seal	date:

Antenna Test Report

Test Unit: Shenzhen Aihui Technology Co. , Ltd.			
Materials	Spring		
Antenna form	Monopole	Polarization mode	**Linear**
Application scenario			
Working band	**433Mhz**	**VSWR**	**≤2**

Power	**Max：2W**	**Impedance**	**50Ω**
dBi	**≥-1dBi**		
Test Equipment	**HPE5071C、Shielding Room、3D automatic turntable**		

Antenna Description:：
1. Grounding processing and picture description: no
2. Need to change the motherboard to match: no

- Test voltage: 3.6V, check the antenna contact is good before testing.
- The RF cable of the integrated tester is kept in a natural state and can not be curled.

Specification:test the specified power level, all indicators must conform to the specifications.

Shenzhen Aihui Technology Co. , Ltd.

---

1. Project Image
2. Test Fixture
3. Antenna matching circuit
4. S11 test
5. Antenna passive efficiency and gain
6. Darkroom test equipment and data
7. Schematic diagram of antenna assembly
8. Antenna environment handling
9. Antenna mass production index
10. Structural drawing

Address: 402TEL: 0755-23203435fax: 0755-23203435, Block C, Juxin Science and Technology Industrial Park, Nanchang community, xixiang, Baoan District, Shenzhen

1.Project Image

The final verification antenna performance prototype in our company for at least one year, easy to analyze and solve the problem of antenna mass production, to ensure the quality of antenna shipment

2.Test Fixture

Objective: to test the passive parameters of antenna as accurately as possible. Making Method: the handset is made of a 50 ohm coaxial cable, one end of which is connected to the test point of the back end of the matching circuit of the handset motherboard (front end of the RF test hole) , and the other end is connected to the SMA joint. The diagram is as follows:

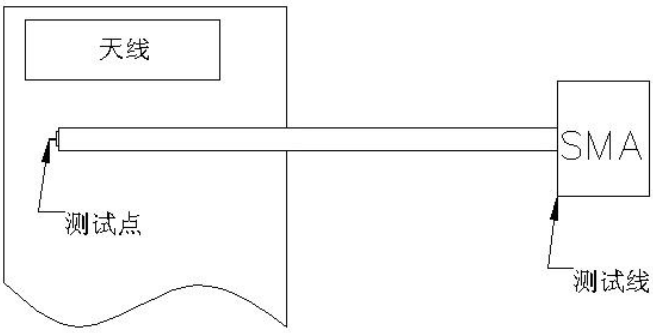

3、Antenna matching circuit

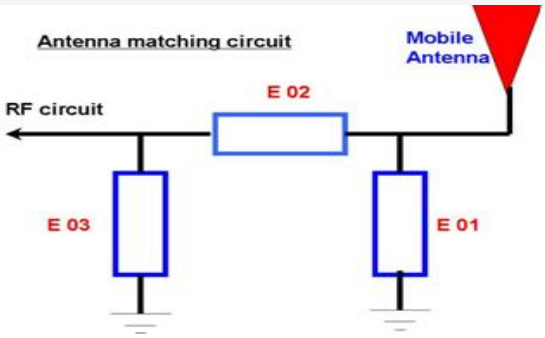

Modify

Address: 402TEL: 0755-23203435fax: 0755-23203435, Block C, Juxin Science and Technology Industrial Park, Nanchang community, xixiang, Baoan District, Shenzhen

E01	E02	E03
No	No	No

Note: The match is unmodified.

4.S11 test

4.0 4.0s11 test method description of test equipment: Network Analyzer (E5071C) test method: a 50 ohm CABLE is used to export from the instrument test port. The SMA connector for connecting the handset is calibrated using a calibration piece, record the echo loss and standing wave ratio corresponding to the relevant frequency points. The test schematic is as follows:

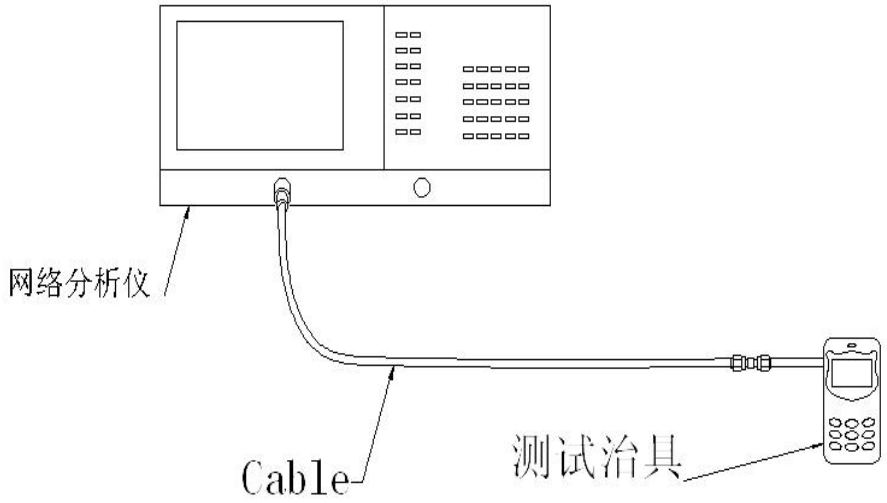

4.1 SWR

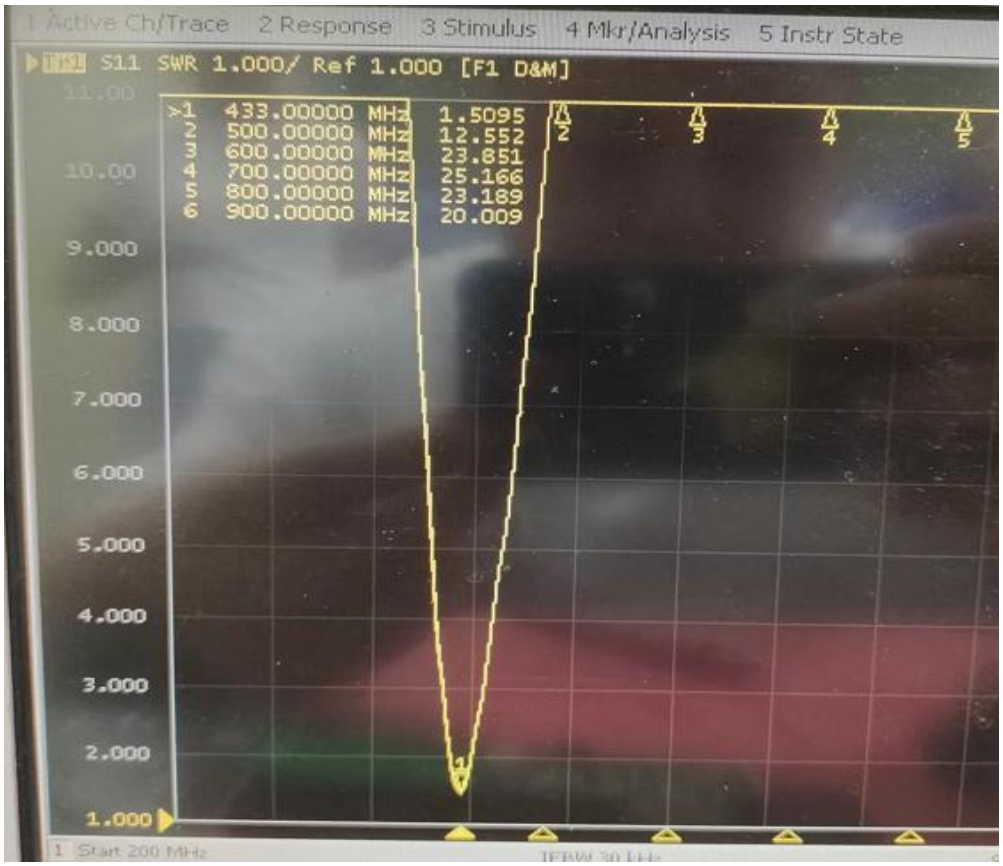
1 Active Ch/Trace
2 Response
3 Stimulus
4 Mkr/Analysis
5 Instr State
S11 SWR 1.000/ Ref 1.000 [F1 D&M]
>1 433.00000 MHz 1.5095
2 500.00000 MHz 12.552
3 600.00000 MHz 23.851
4 700.00000 MHz 25.166
5 800.00000 MHz 23.189
6 900.00000 MHz 20.009
11.00
10.00
9.000
8.000
7.000
6.000
5.000
4.000
3.000
2.000
1.000
1 Start 200 MHz

5.Darkroom test equipment and data

6.Test Equipment

Test system: shielded darkroom

The temperature was 22 ° C ± 3 ° C and the humidity was 50% ± 15%

Test equipment: when testing passive data, use the Network analyzer AGILENTE5071C to test active data, use the omnibus CMW500

7.Active antenna test data

测试数据：		
433Mhz		
Freq(MHz)	Efficiency (%)	Gain (dBi)
430	30.5	0.25
431	31.4	0.36
432	32.5	0.48
433	33.6	0.52
434	34.5	0.16
435	31.6	0.19
436	32.5	0.21
437	30.5	-0.15
438	29.5	0.14

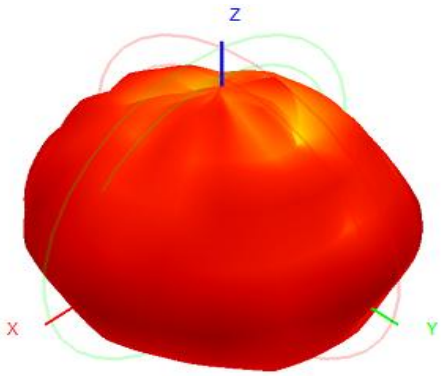

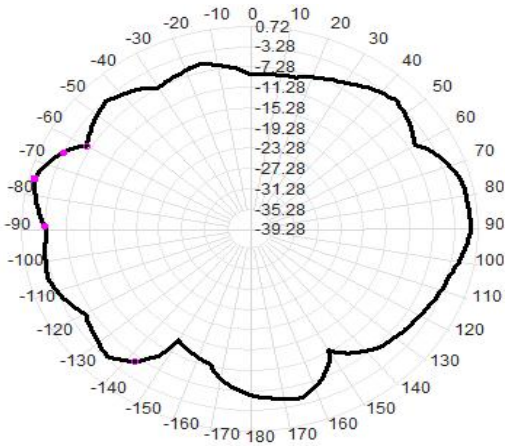

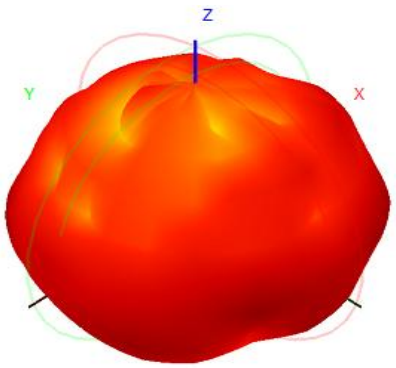

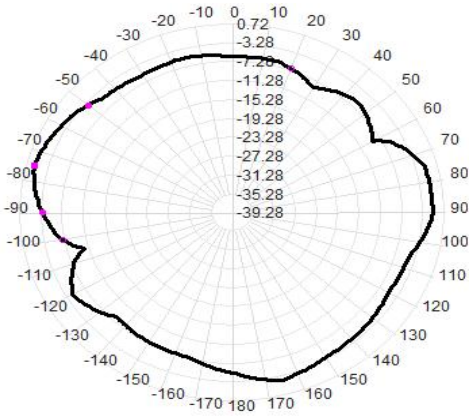

8.Schematic diagram of antenna assembly

9.Antenna environment handling

10.Antenna mass production index

When the antenna is mass-produced, the standing wave ratio is taken as the mass-produced test standard. Based on the differences of the project itself, the following criteria are given:	Standard for volume production
824Mhz-2170Mhz	VSWR (Mass Production performance) & LT;

	VSWR(recognition performance) 0.5
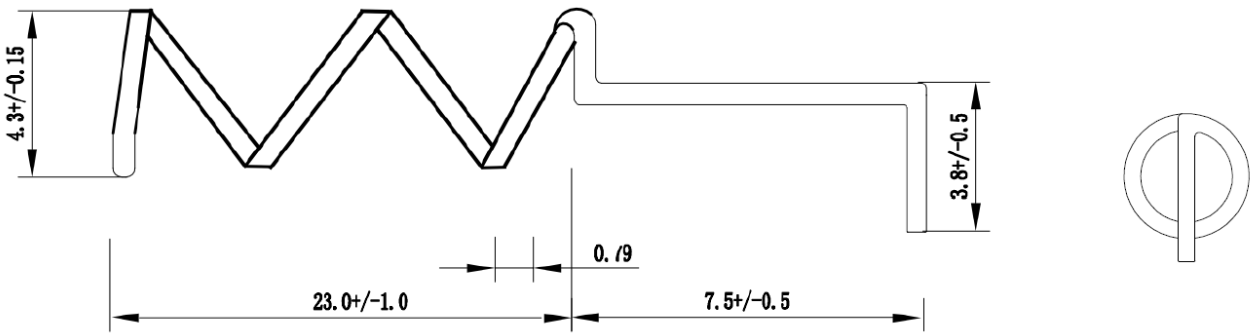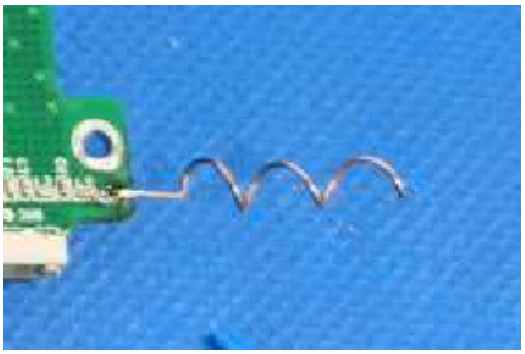
10.1 Structural drawings （mm）