LituFoto

COB Photographic Video Light U8

Instruction Manual

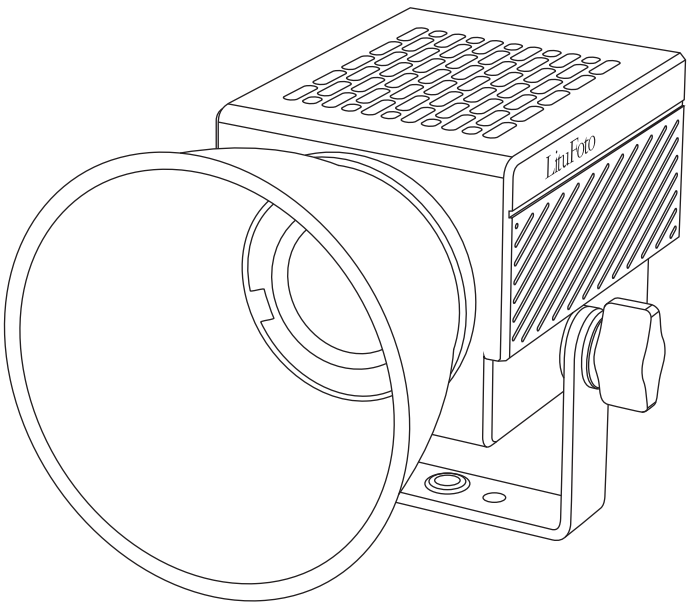

English

Preface

Thank you for purchasing LituFoto U8 products!
U8 is a new cost-effective 60W professional COB camera video light launched by LituFoto.
1.Compact body, only the size of the palm, weighing only 250g, it can achieve portable storage and easy to fill light anywhere, anytime.
2.The compact light body still has a strong output brightness and ultra-high display index, more realistic restoration of the original color of objects, live video without color bias, improve shooting efficiency.
3.With a wide range of adjustable color temperature 2700K-7500K, cool and warm color temperature adjustment at will, 0-100% brightness precision adjustment, shaping stronger texture of the picture, 8 built-in special effects to increase the creation of more possibilities.
4.2.4G wireless remote control and APP control to achieve remote control of multiple lights at your fingertips; compact lamp body cooling channels throughout the light body, with a silent fan, excellent noise control capabilities to allow you to experience immersive shooting.
5.DC adapter power supply / PD fast charging protocol power supply to make outdoor shooting live more convenient.
6.According to different scenes with silicone soft ball or mini soft box and other accessories to use, whether shooting people or a

long time live to make the light softer instead of harsh, for portrait shooting, still life shooting, food shooting, video recording, live lighting and other indoor and outdoor scenes to provide a stable light source.
Please read this manual carefully and carefully before use, after reading, please keep this manual for future reference.

Warning

Please keep dry, do not touch the product with wet hands, and do not immerse the product in water or expose it to rain.
This product is not waterproof, please pay attention to waterproof in rainy days and humid environment.
Please place it out of the reach of children.
Do not disassemble, hit, squeeze or put into fire.
Do not use in flammable gas, violation of this warning may cause an explosion or fire.
Do not use in a high temperature environment or in a closed space under direct sunlight.
Please use a specified power adapter or mobile power supply for power supply, and follow the operating instructions correctly, and use within the specified voltage and temperature range.
Disconnect the power cord when not in use.

Product Specifications

Product Name: COB Photographic Video Light

Product Model：U8
Control mode: APP / remote control
Output power: 60W
Adapter: 24V/3A
USB / C port: applicable PD (according to the power to adapt to the brightness)
Heat dissipation mode: active heat dissipation
Power supply mode: DC adapter, PD adapter, PD mobile power
Display: OLED
Color temperature range: 2700k-7500k
Brightness range: 0-100%
Color rendering index: Ra>96/TLCI>97
Fixed interface: 1/4 or lamp holder port (lamp holder port purchased separately)
Working temperature: -10 °C - 40 °C
Product net weight: 250g
Product size: 161*74*68mm

■ Standard items

Main body light U8 1pc
Spotlight cover 1pc
Soft cover 1pc
Power adapter 1pc
Remote control 1pc (remote control version)

Part Name

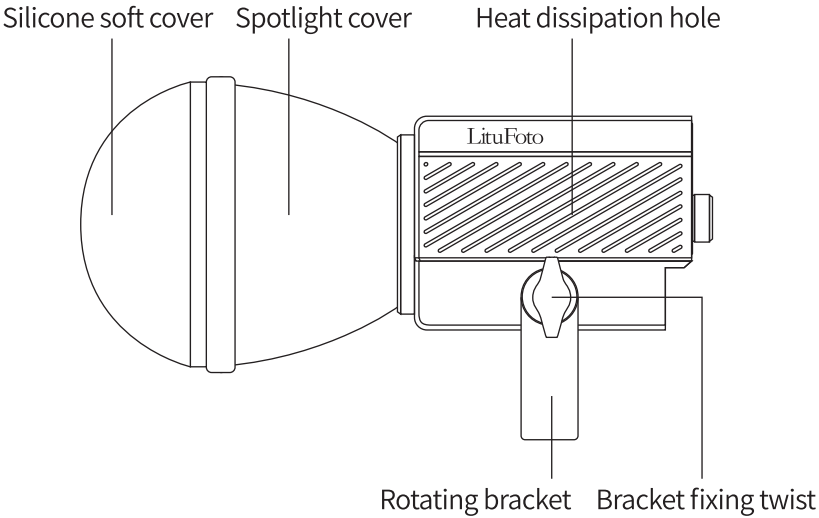
Silicone soft cover
Spotlight cover
Heat dissipation hole
LituFoto
Rotating bracket
Bracket fixing twist

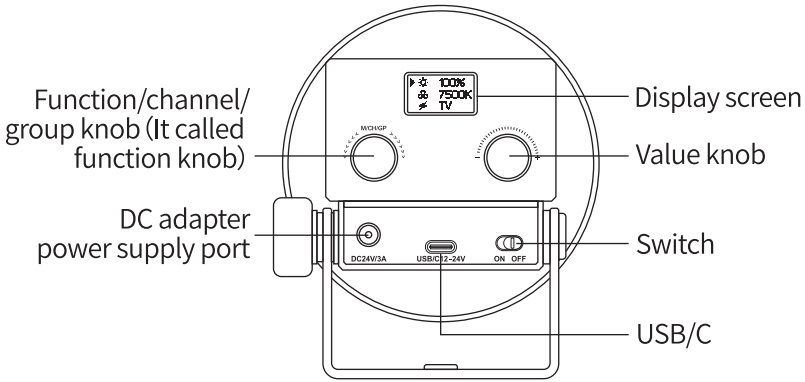
Function/channel/
group knob (It called
function knob)
DC adapter
power supply port
100%
7500K
TV
M/CH/GP
DC24V/3A
USB/C 12-24V
ON OFF
Display screen
Value knob
Switch
USB/C

USB/C port: PD adapter, PD mobile power supply port.

1. Using PD adapter or PD mobile power, PD adapter or PD mobile power with voltage above 12V and current above 2A can work properly, and the device will automatically output brightness according to the power supply of the adapter.

2. When the voltage of the adapter or mobile power is lower than 12V, the current is less than 2A, or when using an A-port adapter, the device may not light up and the display will indicate that the adapter does not match: "Adapter mismatch!"

3.PD adapter or PD mobile power supply icon:

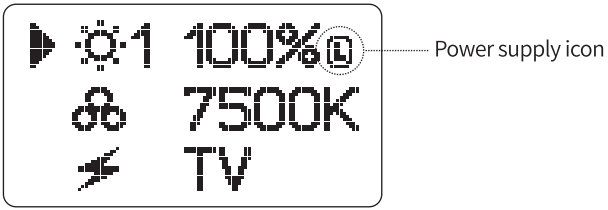

4. PD adapter or PD mobile power supply control: 12V-14V: brightness level 1/24w, 14V-18V: brightness level 2/30w, 18V-20V: brightness level 3/40w, 22V-24V: brightness level 4/60W

Display Interface

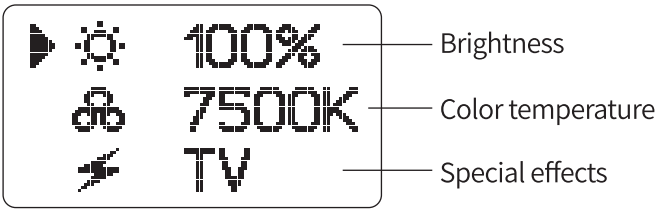

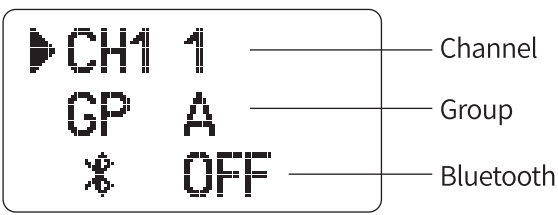

Operation Instructions

Brightness Settings:

Rotate the left function knob to set the small triangle to the brightness[▶ ☼ 100%], then rotate the right value knob to adjust the brightness, the brightness value of 0%-100%.

Color Temperature Settings:

Rotate the function knob on the left and set the small triangle to the color temperature[▶ 7500K], then rotate the right value knob, you can adjust the color temperature of 2700K-7500K.

Special Effect Settings:

Rotate the function knob on the left and set the small triangle to the effects[▶ TV], then rotate the right value knob, you can adjust 8 different effects respectively: LTG, Thunder, Screen,

Candle, Explode, Firework, Welding, SOS. When using the remote control, just press the effects button repeatedly.

Channel/Group Settings:

1.Rotate the function knob [M/CH/GP]on the left of the device, rotate the small triangle icon to the channel[▶CH1 1] or group [▶GP A], long press the function knob for 2 seconds, the device will enter the coding mode, the device light flashes at this time; Press and hold the channel/group coding button [CH GP]on the upper right corner of the remote control for 2 seconds, the remote control light will flash and enter the coding mode;

2.After the device and the remote control enter the coding mode, press the remote control brightness/channel + button or brightness/channel - button to set different channels 1-10 (total10 control channels) ; press the color temperature/group + button or color temperature/group - button to set different groups A/B/C/D/E/F (total 6 groups)

3.After selecting the channel and group, press and hold the function knob[M/CH/GP]of the device and the channel/group code button [CH GP]of the remote control respectively for 2 seconds to confirm the setting, the lights of the device and the remote control will no longer blink and the setting is completed.

Bluetooth Connection:

1.When using the app connection, Bluetooth will directly display ON [▶ ✱ ON] when the phone and device are paired.

2.When you need to disconnect from the mobile app, rotate the function knob to the Bluetooth [▶ ✱ ON] , and rotate the value knob to disconnect the Bluetooth connection [▶ ✱ OFF] .

* Bluetooth connection status:: [▶ ✱ ON]
Bluetooth disconnected status:[▶ ✱ OFF]
Ignore this setting when using the remote control.

Warranty Card

User information	Product name, mode:	
	User name	
	Phone number:	
	Address:	
	Purchase date:	

Seller's information:	Name:	
	Address:	
	Phone number:	
	Sell date	
	Seller stamp and confirm	

Warranty service terms

1. This product is guaranteed for one year
2. Warranty is calculated from the date of first purchase of the product. The purchase date is based on the date of registration of the warranty card when the product is purchased.
3. When a quality problem requires a warranty, return the warranty card, purchase document, and product to your dealer or factory repair service.

FCC Statement:

This device complies with part 15 of the FCC Rules. Operation is subject to the following two conditions:

(1) This device may not cause harmful interference, and

(2) this device must accept any interference received, including interference that may cause undesired operation.

This equipment has been tested and found to comply with the limits for a Class B digital device, pursuant to part 15 of the FCC Rules. These limits are designed to provide reasonable protection against harmful interference in a residential installation. This equipment generates, uses and can radiate radio frequency energy and, if not installed and used in accordance with the instructions, may cause harmful interference to radio communications. However, there is no guarant ee that interference will not occur in a particular installation. If this equipment does cause harmful interference to radio or television reception, which can be determined by turning the equipment off and on, the user is encouraged to try to correct the interference by one or more of the following measures:

—Reorient or relocate the receiving antenna.

—Increase the separation between the equipment and receiver.

—Connect the equipment into an outlet on a circuit different from that to which the receiver is connected.

—Consult the dealer or an experienced radio/TV technician for help.

Caution: Any changes or modifications not expressly approved by the party responsible for compliance could void the user's authority to operate the equipment.

This equipment complies with FCC radiation exposure limits set forth for an uncontrolled environm ent. This transmitter must not be co‐located or operating in conjunction with any other antenna or transmitter.

This equipment should be installed and operated with minimum distance 20cm between the radiator&your body.

Not applicable warranty

1. Product or component exceeds warranty.
2. Cannot provide warranty card or valid certificate for purchase.
3. Damage or broken caused by failure to use the instructions.
4. Broken or damage caused by improper handling, dropping, shipping.
5. Malfunction or damage caused by contact with or exposure to improper temperature, solvents, acids, bases, flooding, or moisture .
6. Malfunction and ddamage caused by repairs, disassembles, changes by users.
7. Malfunction or damage due to force or accident.
8. Malfunction or damage caused by other non-quality problems.
9. Malfunction and damage caused by using a power source other than the specified one, voltage .

During the use of the product, the appearance of scratching, discoloration, wear, and consumption is not a fault within the scope of the warranty; the damage or economic loss caused by improper use has nothing to do with the company.

Shenzhen Li Neng Technology Co., Ltd.
Add: 6th Floor, Dawei Business Building NO.B, West Jianshe Road, Minzhi Street, Longhua District, Shenzhen City.
Website:www.litufoto.com

RoHS FC CE PSE UK CA

Made in China