Introduction

Thank you for selecting our products, for a better using experience, please read this guide carefully before using it.

Rotating screen, which implied by the name is to use the persistence of vision in the human eyes, through a series of high-density LED rotating to images, then perform the three-dimensional visual effect. The device is characteristic of borderless vision, high brightness, low power consumption, also easy to install and carry. It can be widely used in exhibitions, shops, malls, cinemas, airports, hotels, and other crowded areas for advertising.

Product List

Mainframe*1 Light Emitting Diode Strips*4
Power Adapter*1 Power Line*1
Remote Control*1 Fixing Bracket*1
Screw Bag*1 Manual*1

Product Parameter

Input Power: AC100~240V/50~60Hz Operating Voltage: DC24V
Rated Power: 96W Operating Temperature: -20~60 degrees
Audio Output: support Multiple Splicing: support
Support Format: mainstream video and image formats such as MP4 /MPEG/AVI/JPG
Support Application: IOS/ Android/Personal Computer Win7/8/10

Install

1.Select the installation location, first install the fixing bracket, the spacing between the holes is shown below.

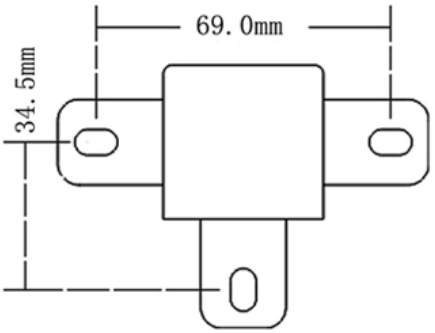

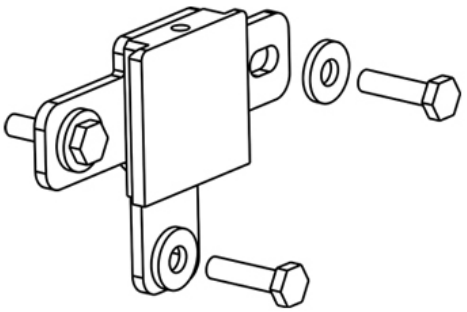

2.Install the light strips, simultaneously press the safety buckle on the both sides of the arm of mainframe, then insert the light strip A or B into the light arm, remember to check whether the safety buckle is completely sprung and locked. Danger alert: If the safetv buckle is not locked, the light strip will be thrown out.

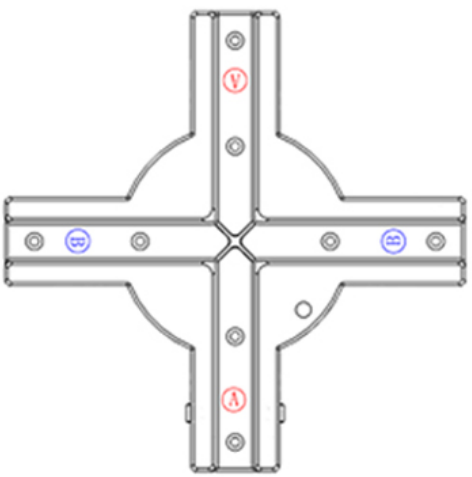

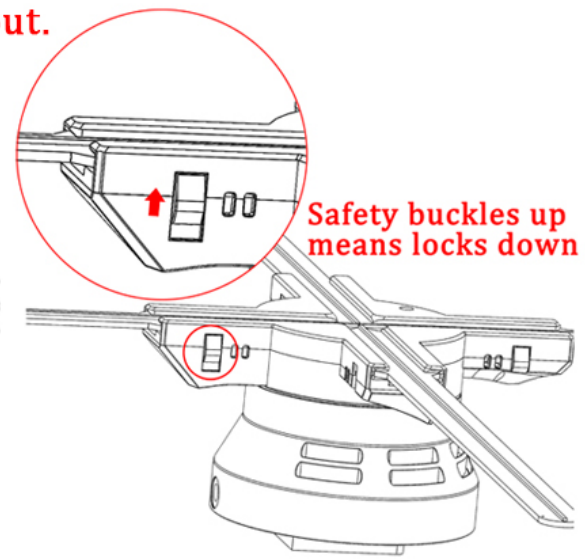

3.After inserting the light strip, hang the mainframe on the bracket which just installed, then screw on a locking screw, installation is completed, as the picture below.

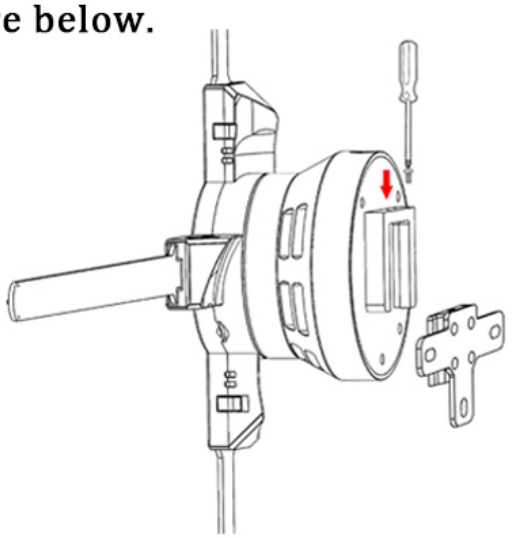

Using Method

1.Connect the power, four light strips are on, running in the form of a lantern. The default is the power-up device does not rotate, it is controlled by remote control or connections with application.Please scan the code to download the application.

2.Start the application (As shown in figure 1), for the first time, keep the phone connecting with internet, ensure the application is the latest version. Open the application, click on the “design” window. While seeing the three-dimension text sphere and other templates updated, it means the application is the latest version. (As shown in the figure 2)
(Take the android for example, same to the IOS)

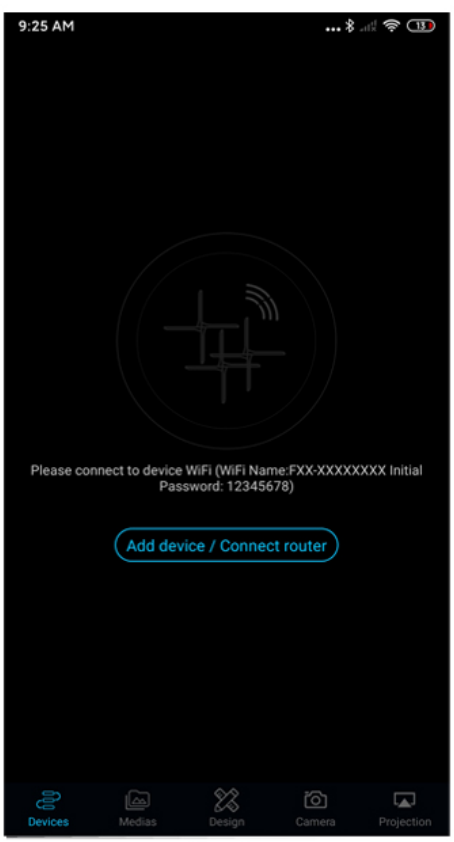

(一)

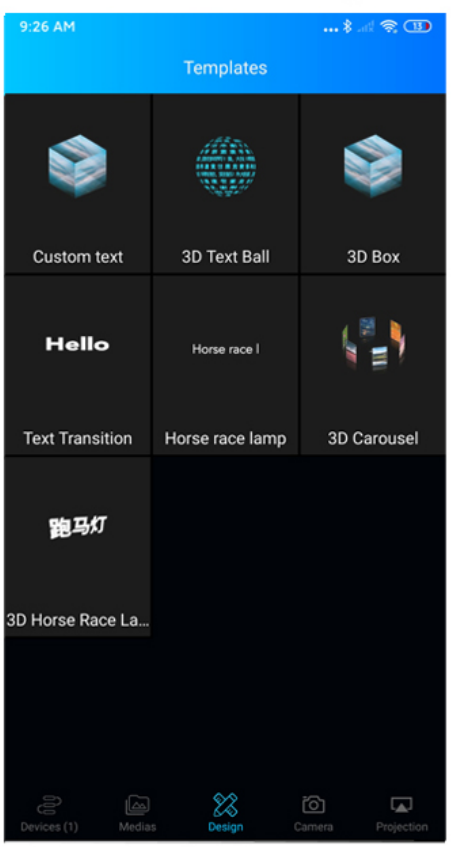

(二)

3.Click adding device, the list will show you the nearby hotspots that can be connected, choose F65-XXXXXXXX, F65 refers to the type of the device, which is different between all the sizes, such as the 80 size is F80-XXXXX XXX. Last eight digits are the identification of the device. The password of WIFI is 12345678, return to the application surface after connected successfully. (As shown below) The lower left corner shows device 1 means it has already connected one device. Point out: if device did not connect after returning to the application surface, please shut the application down and restart it.

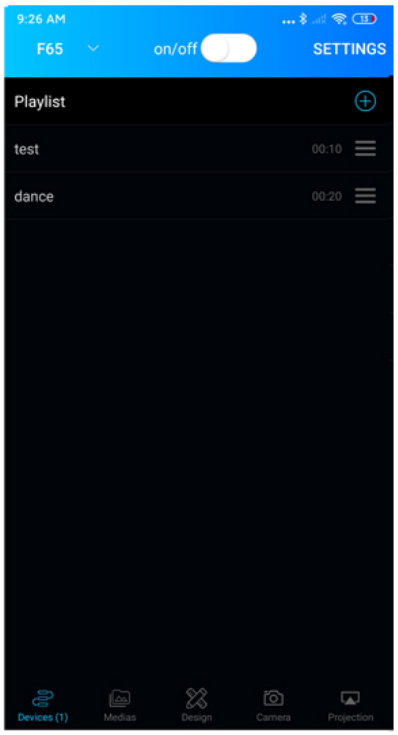

(三)

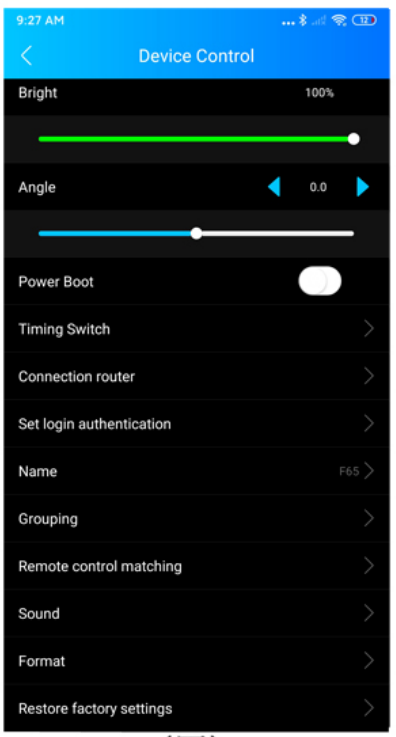

(四)

4.After connected successfully, click the material in the playlist and slide it to the left, then you can change the file name of the material and put it on a timer. Click the “+”, then you can add your own images or videos. Click set up, then you can alter the power up and resume by alarm. (As shown in the picture 4)

5.After making the material and saving it in the “design”, return to the main surface and click the “+” at the upper right corner, choose “local” , then you can upload the material you just made.

6.Bluetooth Speaker Connection. The default is turning off the Bluetooth, after connecting to the device, open the audio Bluetooth switch-activate Bluetooth. Prompt Bluetooth activated successfully, please open the Bluetooth speaker, then the device will automatically search for the connectable Bluetooth speaker. During the using process, Bluetooth will automatically disconnect when you upload the files, and automatically connect again after uploaded.

7.When using the material from the cloud media library, the phone needs to relate to the internet before browsing and downloading. And the material must download to the local before being uploaded and used.

Personal Computer and Multiple splicing Method

1.Use the browser opening the websitehttps://www.ftlled.com/spindisplay click download.

2.After installed the software, click the connecting function of computer to connect with device. The name and the password of device is same as the application. Connected successfully is as below.

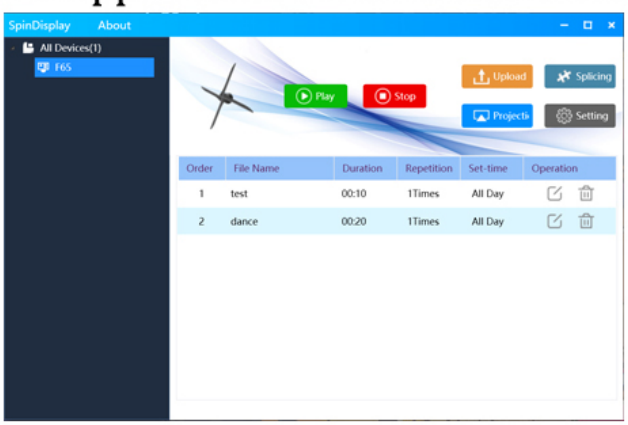

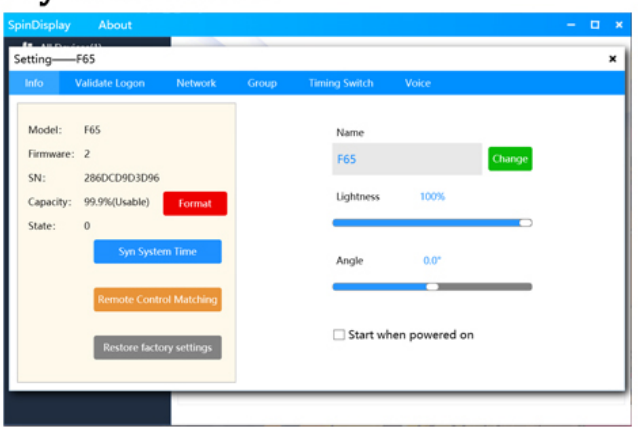

3.Click “upload” button, then you can add your own images or videos. Click setup, then you can alter the name of device, connect the router, and perform multiple connections.

4.About methods of multiple splicing, please contact with local distributors.

Introduction to Remote Control

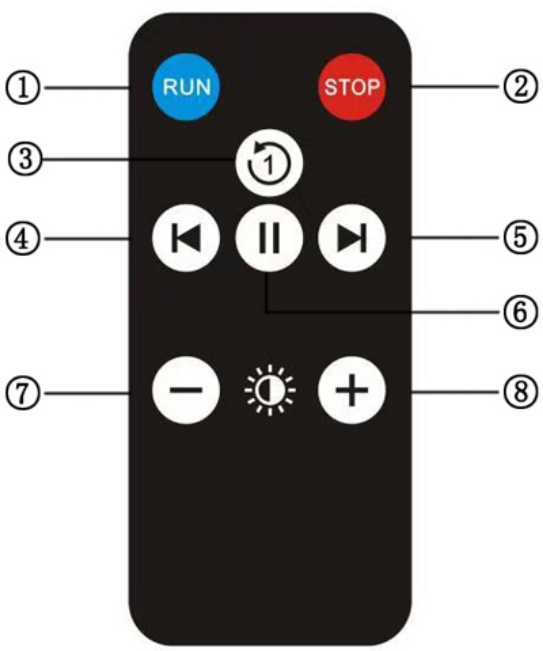

①Run ②Stop

③Current display materials loop

④Play the last piece

⑤Play the next piece

⑥Pause

⑦Luminance-

⑧Luminance+

Daily maintenance and common fault handling

1.When the power is plugged in, the device cannot be turned on, there is nothing displayed on the screen.

◆If the device can be powered correctly, you can see the light strips are bright.

2.After the device is started, the screen appears incomplete or the whole light strip is not bright.

◆Remove the light strip, check whether there are foreign matter or surface dirt on the gold finger contact point.

3.After the device has been running for hours, black circles appear on the screen.

◆There will be dust and stains sticking to the surface of the device during the operation, please remove it through a soft dry cloth or a small brush. Please clean the dust regularly to achieve the best display. Do not use the volatile organic solvents for cleaning.

Attention

1. Do not touch the product while it is running.

2. Install the device at least above ground 2.9 meters, otherwise it should be installed in a protective cover.

3.After using for a long period, the temperature of the device will go up, please do not touch it until it cools down.

4.No children allowed to operate or play with the device and do not let children close to the device without adults supervised.

5.The device does not have waterproof function; it should be installed in a protective cover while exposed to the area.

After-sales Service

1. The product purchased from our company under non-human causes are guaranteed to keep in good repair for one year, maintain for life.

2.During the warranty period, if happened the costs on the quality of the products, our company will repair it for free.

3.Warranty will not be provided in case of the following circumstances:

①Disassembly and repair the device without the company's consents.
②Damage caused by improper use or the other natural environment.

4.The warranty liability is limited to the product maintenance during the warranty period, we do not take any other responsibilities.

This device complies with part 15 of the FCC Rules. Operation is subject to the following two conditions: (1) This device may not cause harmful interference, and (2) this device must accept any interference received, including interference that may cause undesired operation.

Any Changes or modifications not expressly approved by the party responsible for compliance could void the user's authority to operate the equipment.

Note: This equipment has been tested and found to comply with the limits for a Class B digital device, pursuant to part 15 of the FCC Rules. These limits are designed to provide reasonable protection against harmful interference in a residential installation. This equipment generates uses and can radiate radio frequency energy and, if not installed and used in accordance with the instructions, may cause harmful interference to radio communications. However, there is no guarantee that interference will not occur in a particular installation. If this equipment does cause harmful interference to radio or television reception, which can be determined by turning the equipment off and on, the user is encouraged to try to correct the interference by one or more of the following measures:
-Reorient or relocate the receiving antenna.
-Increase the separation between the equipment and receiver.
-Connect the equipment into an outlet on a circuit different from that to which the receiver is connected.
-Consult the dealer or an experienced radio/TV technician for help.

This equipment complies with FCC radiation exposure limits set forth for an uncontrolled environment. This equipment should be installed and operated with minimum distance 20cm between the radiator & your body.