KEMI
MOTO

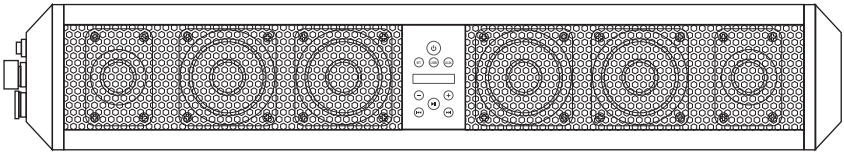

Usage Guidelines

TABLE OF CONTENTS

INFORMATION TO THE USER---------- 2
GETTING TO KNOW YOUR KEMIMOTO---------- 2
BEFORE YOU START---------- 3
BLUETOOTH OPERATION---------- 4
STREAMNG MUSIC---------- 5
AUX INPUT---------- 6
USB INPUT---------- 7
REMOTE CONTROL---------- 8
INSTALLATION---------- 9
TROUBLESHO0TING---------- 10
WIRE DIAGRAM---------- 11
SPECIFICATIONS---------- 11

Thank you for purchasing this
KEMIMOTO All-Terrain Sound System

Please read through these instructions carefully so you will know how to operate your model properly.
After you have finished reading the instructions,keep this document in a safe place for future reference.

THIS PACKAGE CONTAINS

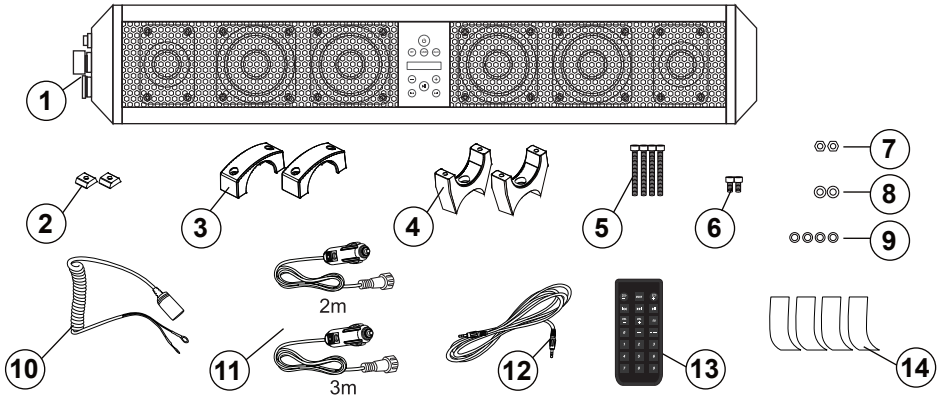

1	KEMIMOTO All-Terrain Speaker System	x1
2	Slider	x2
3	Bracket-1	x2
4	Bracket-2	x2
5	Long Bolt M6*50mm	x4
6	Short Bolt M6*14mm	x2
7	Nut	x2
8	Washer	x2
9	Spring Washer	x4
10	Power Accessory Extension Adaptor	x1
11	Adapter (2m & 3m)	x1
12	3.5mm Aux Cable (2m)	x1
13	Remote control	x1
14	Rubber Pad	x4

INFORMATION TO THE USER

The Bluetooth® word mark and logos are registered trademarks owned by Bluetooth SIG,Inc.and any use of such marks is under license. Other trademarks and trade names are those of their respective owners.

GETTING TO KNOW YOUR KEMIMOTO

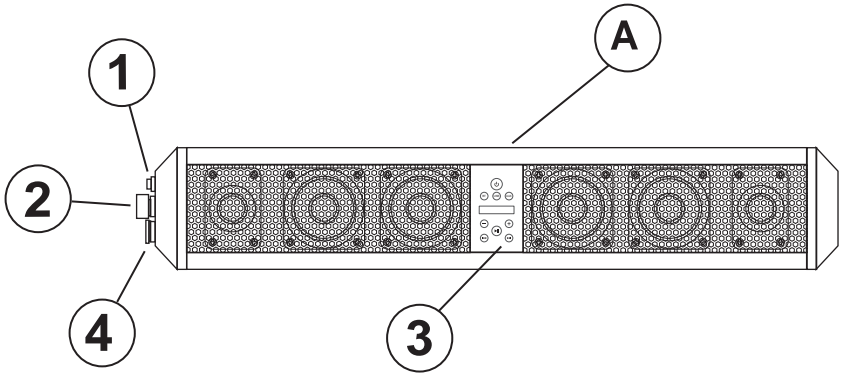

A	KEMIMOTO
1	3.5mm AUX-INPUT
2	CIGARETTE POWER CABLE ADAPTER
3	CONTROL PANEL
4	USB JACK

BEFORE YOU START

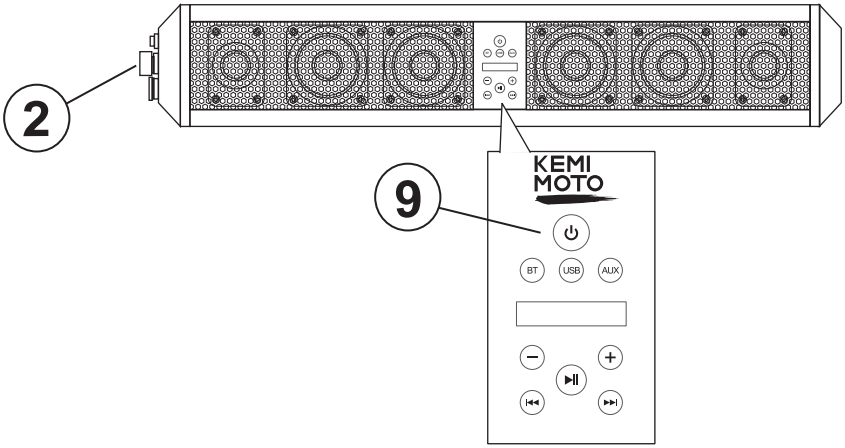

PAIRING& DISCOVERING A NEW BLUETOOTH CONNECTION

1) Power on the KEMIMOTO by plugging in the male cigarette lighter adaptor into ② a female cigarette lighter receptacle.

2) Press the button⑨.The KEMIMOTO will automatically go in to pairing mode:

ANDROID users:
a. Go into the **Settings Menu** of your device
b. Enter the **Bluetooth Menu**
c. **TURN ON Bluetooth** and press SCAN
d."**KEMIMOTO**"wil now be displayed under **AVAILABLE DEVICES**
e. If prompted, enter passcode: "0000"

iOS users:
a. Go into the **Settings Menu** of your **iOS** device
b. Enter the **Bluetooth Menu**
c. **TURN ON Bluetooth**
d."**KEMIMOTO**" will now be displayed
e. If prompted, enter passcode:"0000"

NOTE: You have 2 minutes before you must restart this procedure over again.

3) If **KEMIMOTO** is not seen,repeat the above steps to refresh the “**Device List**”

4) When the connection is successful, you are now ready to stream music from your favorite media player to the **KEMIMOTO**

BLUETOOTH OPERATION

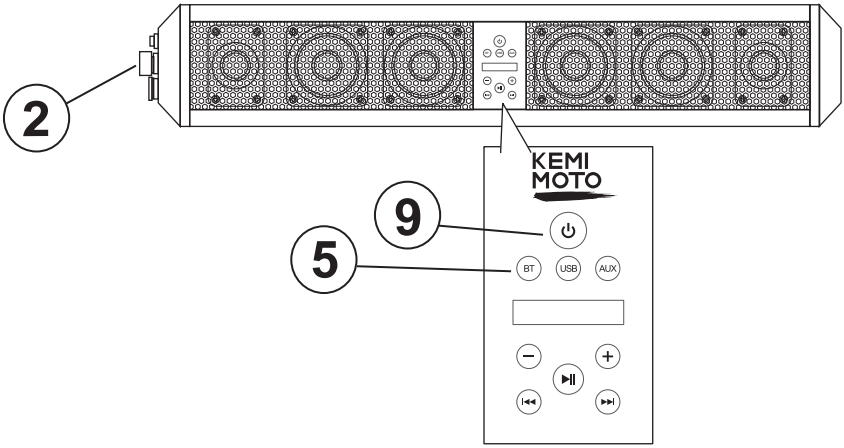

RECONNECTION

1)Power on the **KEMIMOTO** and your last paired **Bluetooth device**.

2) Press the button⑤.The unit will now automatically reconnect.

3) If your device was previously paired with the **KEMIMOTO**,but it wasn't the last paired device:
a. Ensure no other **devices** are currently paired.
b. Enter the **Bluetooth Menu** on your device being paired .
c. "**KEMIMOTO**"will display under **AVAILABLE DEVICES.**
d. Choose the "**KEMIMOTO**" to reconnect.

4)If the device is out of range from the **KEMIMOTO**,it will disconnect automatically:
a.The **KEMIMOTO** will automatically reconnect to the device once back in range.

TIPS	To avoid battery exhaustion, be sure to occasionally run the vehicles engine while using this product. Using this product without running the engine can drain the battery.

STREAMING MUSIC

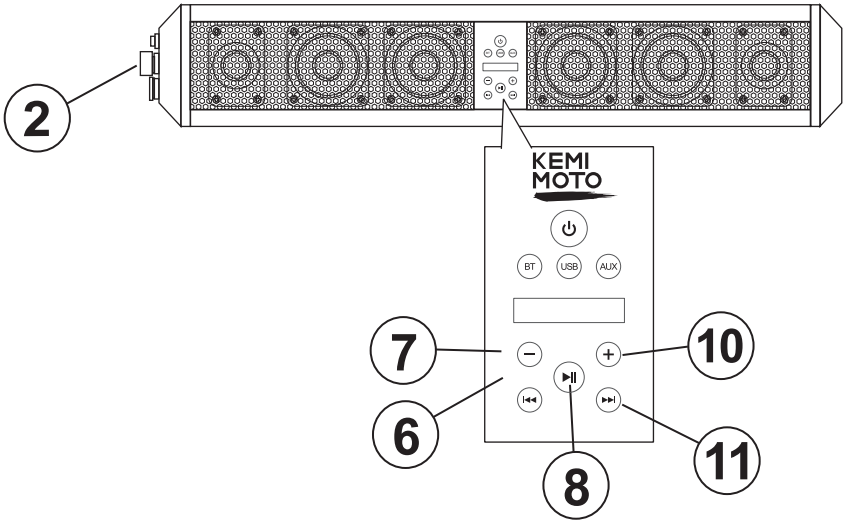

MULTIFUNCTION CONTROLLER BLUETOOTH OPERATION

1) Press the ⑧ **PLAY/PAUSE** once to start playing music or press the PLAY button from your devices touch screen

2) To skip songs or advance,press the ⑪ **NEXT TRACK** button

3)To select the previous song,press the ⑥ **PREVIOUS TRACK** button

VOLUME CONTROL

1) To raise the volume press the ⑩ **VOLUME UP** button or use your devices controls

2)To lower the volume press the ⑦ VOLUME DOWN button or use your devices controls

TIPS	For maximum audio performance, ensure your device Bluetooth volume is set to a minimum 75% level before stowing.

AUX INPUT

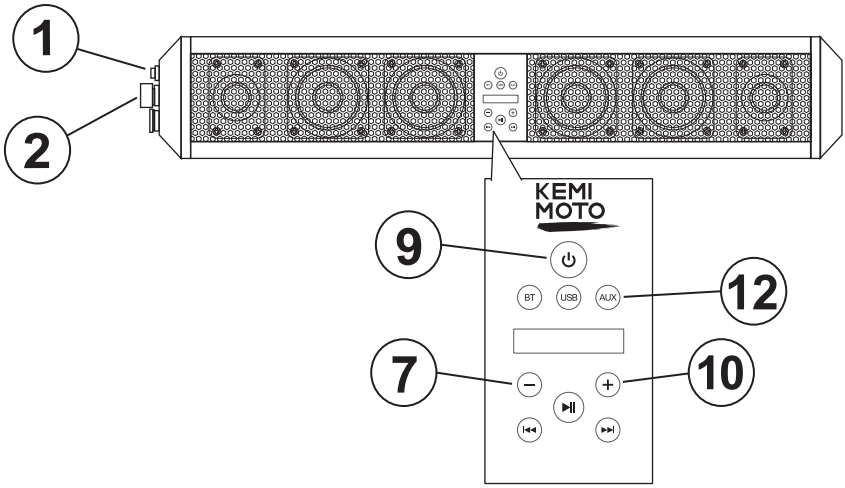

AUX-IN OPERATION

1)Power on the **KEMIMOTO** by plugging in the male cigarette lighter adaptor into ② a female cigarette lighter receptacle.

2)Press ⑨ to power on.

3) Connect the integrated 3.5mm **AUX-IN** cable ① to your devices headphone jack

4) Route the wire back to **KEMIMOTO**, and secure your device

VOLUME CONTROL

1) To raise the volume press the ⑩ **VOLUME UP** button or use your controls

2) To lower the volume press the ⑦ **VOLUME DOWN** button or use your devices controls

TIPS	For maximum audio performance, ensure your device headphone volume is set to a minimum 75% level before stowing.

USB INPUT

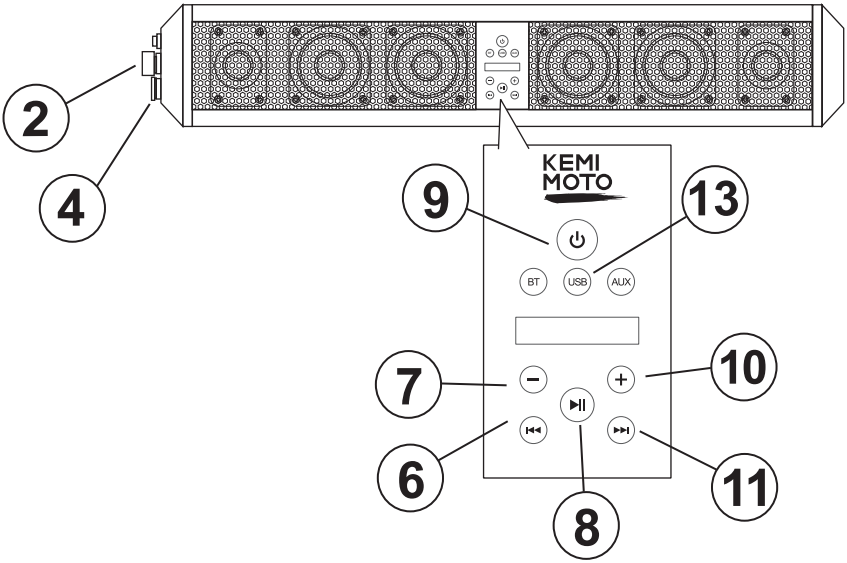

USB IN OPERATION

1)Power on the **KEMIMOTO** by plugging in the male cigarette lighter adaptor into ② a female cigarette lighter receptacle.

2)Press ⑨ to power on.

3)Insert the USB Flash drive on ④ and play the music automatically.

4)Press the ⑧ **PLAY/PAUSE** once to start playing music or pause

5) To skip songs or advance, press the ⑪ **NEXT TRACK** button

6)To select the previous song, press the ⑥ **PREVIOUS TRACK** button

7)To raise the volume press the ⑩ **VOLUME UP** button or use your devices controls

8)To lower the volume press the ⑦ **VOLUME DOWN** button or use your device controls

TIPS	USB can play music formats MP3 and WMA. USB can provide 1Acurrent.

REMOTE CONTROL

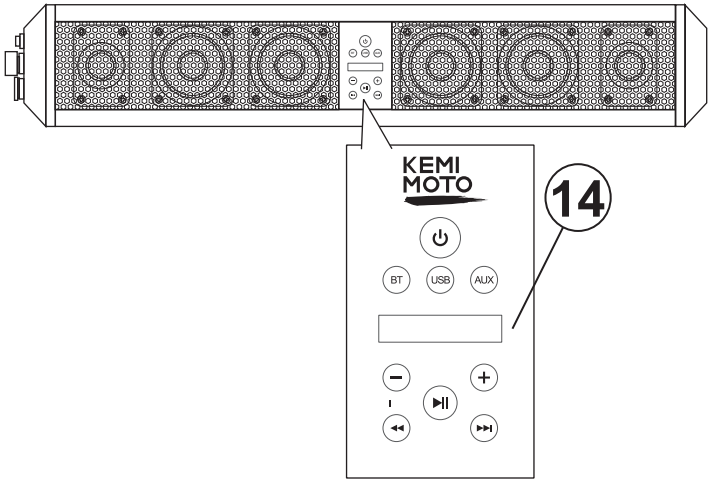

REMOTE CONTROL OPERATION

1) Remote control receiver window（14）.

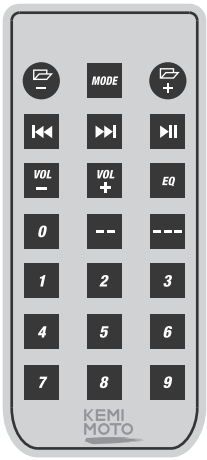

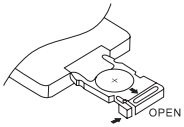

REPLACEMENT BATTERY - CR2025

INSTALLATION

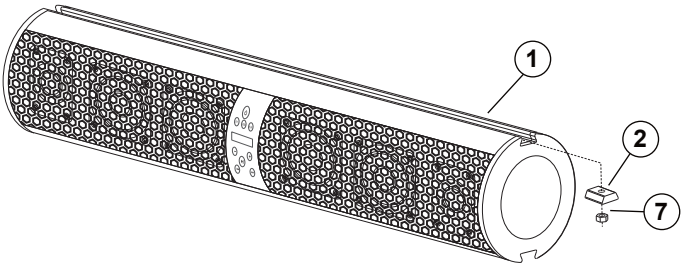

1. Put the nut [7] into the lower slot of the slider [2], and push the slider [2] onto the slide rail of the speaker.

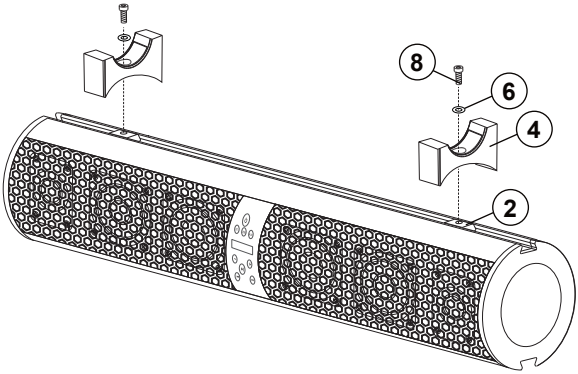

2. Secure bracket [4] to slider [2] with short bolt [6] and washer [8].

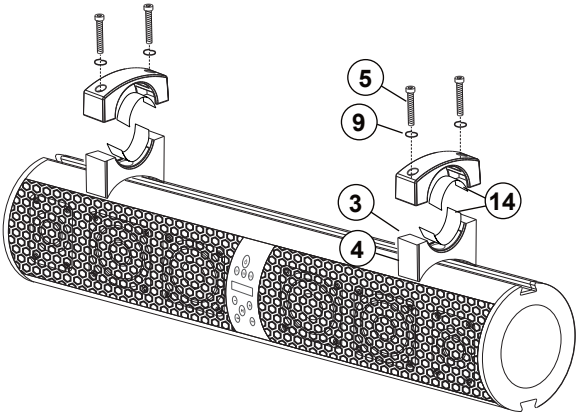

3. Place the rubber pads [14] on the roll bar, assemble bracket [3] and bracket [4] with two long bolts [5] and two spring washers [9].

4. Repeat step 1-3 for other side installation.

TROUBLE SHOOTING

TROUBLE	*CAUSE*	*SOLUTION*
Unit will not turn on	The fuse is blown	Check / replace the fuse
	Main acc switch not engaged	Turn switch to on position
No sound is heard	Device volume is low / muted	Turn the volume level up
	Device is paused or muted	Check your devices playing / volume status
Cannot pair Bluetooth	The Bluetooth function of the device is not enabled	Refer to the user manual of the device for how to enable the Bluetooth function
The audio quality is poor after connection with a Bluetooth enabled device	The Bluetooth reception is poor	Move the device closer to the audio system or remove any obstacle between the device
Unit has become unresponsive	Power glitch or interference	Disconnect power for 10 seconds to reset

DIMENSIONS

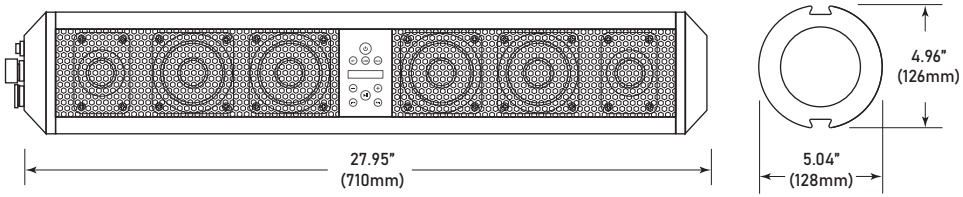

WIRE DIAGRAM

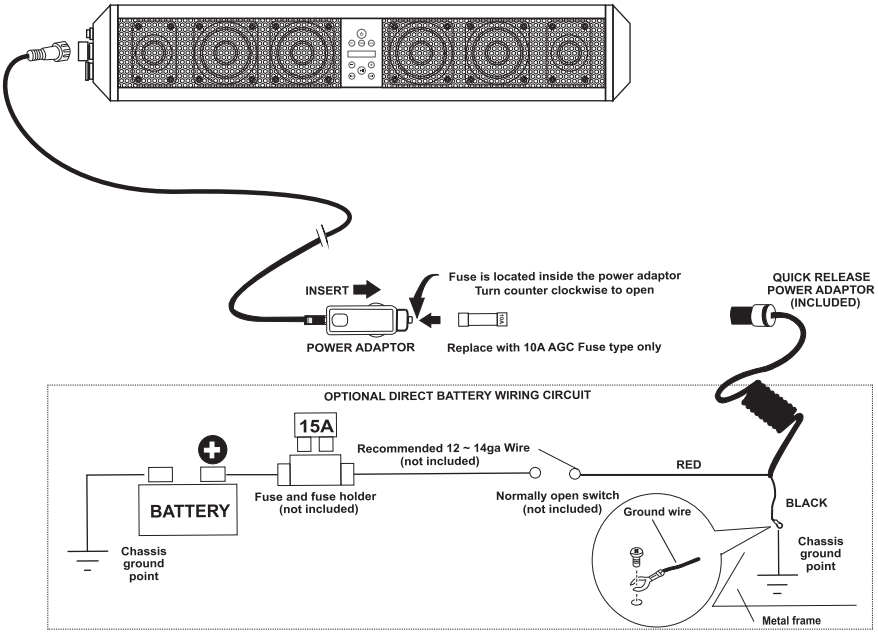

SPECIFICATIONS

BLUETOOTH

·Version: 5w/ EDR
·A2DP
·Range: 33ft(10m)

AMPLIFIER

·Maximum Output Power: 500 Watts
·Frequency Response: 45Hz-22kHz

SPEAKERS

· Dimensions: (4)4”/101.6mm
· Tweeter Size: (2)1”soft Dome

GENERAL

·Operational Power: 12VDC (10-16V allowable)
·MAX Current Draw: 8A
·Replacement Fuse: 10A AGC TYPE
·Color: Black
·Weight: 13.2lbs / 6Kg
·Dimensions mm WxHxD: 710x128x126
·Dimensions Inches WxHxD: 27.95x5.04x4.96

SPECIFICATIONS SUBJECT TO CHANGE WITHOUT NOTICE

FCC Statement

This equipment has been tested and found to comply with the limits for a Class B digital device, pursuant to part 15 of the FCC Rules. These limits are designed to provide reasonable protection against harmful interference in a residential installation. This equipment generates, uses and can radiate radio frequency energy and, if not installed and used in accordance with the instructions, may cause harmful interference to radio communications. However, there is no guarantee that interference will not occur in a particular installation. If this equipment does cause harmful interference to radio or television reception, which can be determined by turning the equipment off and on, the user is encouraged to try to correct the interference by one or more of the following measures:

- Reorient or relocate the receiving antenna.
- Increase the separation between the equipment and receiver.
- Connect the equipment into an outlet on a circuit different from that to which the receiver is connected.
- Consult the dealer or an experienced radio/TV technician for help.

Caution: Any changes or modifications to this device not explicitly approved by manufacturer could void your authority to operate this equipment.

This device complies with part 15 of the FCC Rules. Operation is subject to the following two conditions: (1) This device may not cause harmful interference, and (2) this device must accept any interference received, including interference that may cause undesired operation.

RF Exposure Information

This equipment complies with FCC radiation exposure limits set forth for an uncontrolled environment. This equipment should be installed and operated with minimum distance 20cm between the radiator and your body.