CFR 47 FCC PART 02
CFR 47 FCC PART 22 H
CFR 47 FCC PART 24 E
CFR 47 FCC PART 27
CFR 47 FCC PART 90S

TEST REPORT

For

LTE MODULE

MODEL NUMBER: EG25-G

FCC ID: 2A46G-EG25-G

REPORT NUMBER: 4790502434-1

ISSUE DATE: August 15, 2022

Prepared for

Guangzhou Xaircraft Technology CO.,LTD
Block C, No.115, Gaopu Road, Tianhe District, GuangzhouCity, Guangdong,P.R.China

Prepared by

UL Verification Services (Guangzhou) Co., Ltd, Song Shan Lake Branch

Building 10, Innovation Technology Park, No. 1, Li Bin Road, Song Shan Lake Hi-Tech Development Zone Dongguan, 523808, People's Republic of China

Tel: +86 769 22038881
Fax: +86 769 33244054
Website: www.ul.com

The results reported herein have been performed in accordance with the laboratory's terms of accreditation. This report shall not be reproduced except in full without the written approval of the Laboratory. The results in this report apply to the test sample(s) mentioned above at the time of the testing period only and are not to be used to indicate applicability to other similar products.

Revision History

Rev.	Issue Date	Revisions	Revised By
V0	08/15/2022	Initial Issue	

Note:
1.This test report is only published to and used by the applicant, and it is not for evidence purpose in China.
2. The measurement result for the sample received is <Pass> according to < CFR 47 FCC PART 22 H >< CFR 47 FCC PART 24 E>< CFR 47 FCC PART 27 > <CFR 47 FCC PART 90> when <Accuracy Method> decision rule is applied.

This report shall not be reproduced except in full, without the written approval of UL Verification Services (Guangzhou) Co., Ltd, Song Shan Lake Branch

TABLE OF CONTENTS

1. ATTESTATION OF TEST RESULTS 4

2. TEST METHODOLOGY 5

3. FACILITIES AND ACCREDITATION 5

4. CALIBRATION AND UNCERTAINTY 6

4.1. MEASURING INSTRUMENT CALIBRATION 6

4.2. MEASUREMENT UNCERTAINTY 6

5. EQUIPMENT UNDER TEST 7

5.1. DESCRIPTION OF EUT 7

5.2. TEST CHANNEL CONFIGURATION 7

5.3. MAXIMUM AVERAGE OUTPUT POWER 11

5.4. WORST-CASE CONFIGURATION AND MODE 15

5.5. DESCRIPTION OF AVAILABLE ANTENNAS 16

5.6. DESCRIPTION OF TEST SETUP 17

6. MEASURING INSTRUMENT AND SOFTWARE USED 18

7. ANTENNA TERMINAL TEST RESULTS 19

7.1. EFFECTIVE (ISOTROPIC) RADIATED POWER OF TRANSMITTER 19

7.2. PEAK TO AVERAGE RADIO 42

7.3. OCCUPIED BANDWIDTH 43

7.4. BAND EDGE EMISSIONS 44

7.5. SPURIOUS EMISSION AT ANTENNA TERMINAL 46

7.6. FREQUENCY STABILITY 48

8. RADIATED SPURIOUS EMISSIONS 49

This report shall not be reproduced except in full, without the written approval of UL Verification Services (Guangzhou) Co., Ltd, Song Shan Lake Branch

1. ATTESTATION OF TEST RESULTS

Applicant Information

Company Name:	Guangzhou Xaircraft Technology CO.,LTD
Address:	Block C, No.115, Gaopu Road, Tianhe District, GuangzhouCity, Guangdong, P.R.China

Manufacturer Information

Company Name:	Guangzhou Xaircraft Technology CO.,LTD
Address:	Block C, No.115, Gaopu Road, Tianhe District, GuangzhouCity, Guangdong, P.R.China

EUT Information

EUT Name:	LTE MODULE
Model:	EG25-G
Sample Received Date:	July 1, 2022
Sample Status:	Normal
Sample ID:	5116176
Date of Tested:	July 14, 2022 ~ August 08, 2022

APPLICABLE STANDARDS	
STANDARD	**TEST RESULTS**
CFR 47 FCC PART 02	PASS
CFR 47 FCC PART 22 H	PASS
CFR 47 FCC PART 24 E	PASS
CFR 47 FCC PART 27	PASS
CFR 47 FCC PART 90S	PASS

Prepared By:

James Qin
Project Engineer

Checked By:

Denny Huang
Laboratory Leader

Approved By:

Stephen Guo
Laboratory Manager

This report shall not be reproduced except in full, without the written approval of UL Verification Services (Guangzhou) Co., Ltd, Song Shan Lake Branch

2. TEST METHODOLOGY

The tests documented in this report were performed in accordance with ANSI C63.26-2015, 971168 D01 Power Meas License Digital Systems v03r01, 971168 D02 Misc Rev Approv License Devices v02r01, 412172 D01 v01r01 Determining ERP and EIRP, CFR 47 FCC Part 2, Part 22 H, Part 24 E, Part 27, Part 90.

3. FACILITIES AND ACCREDITATION

Accreditation Certificate	**A2LA (Certificate No.: 4102.01)** UL Verification Services (Guangzhou) Co., Ltd. Song Shan Lake Branch. has been assessed and proved to be in compliance with A2LA. ***FCC (FCC Designation No.: CN1187)*** UL Verification Services (Guangzhou) Co., Ltd. Song Shan Lake Branch. Has been recognized to perform compliance testing on equipment subject to the Commission's Delcaration of Conformity (DoC) and Certification rules ***ISED (Company No.: 21320)*** UL Verification Services (Guangzhou) Co., Ltd. Song Shan Lake Branch. has been registered and fully described in a report filed with ISED. The Company Number is 21320 and the test lab Conformity Assessment Body Identifier (CABID) is CN0046. ***VCCI (Registration No.: G-20019, R-20004, C-20012 and T-20011)*** UL Verification Services (Guangzhou) Co., Ltd. Song Shan Lake Branch. has been assessed and proved to be in compliance with VCCI, the Membership No. is 3793. Facility Name: Chamber D, the VCCI registration No. is G-20019 and R-20004 Shielding Room B , the VCCI registration No. is C-20012 and T-20011

Note 1: All tests measurement facilities use to collect the measurement data are located at Building 10, Innovation Technology Park, Song Shan Lake Hi tech Development Zone, Dongguan, 523808, China

Note 2: The test anechoic chamber in UL Verification Services (Guangzhou) Co., Ltd. Song Shan Lake Branch had been calibrated and compared to the open field sites and the test anechoic chamber is shown to be equivalent to or worst case from the open field site.

Note 3: For below 30 MHz, lab had performed measurements at test anechoic chamber and comparing to measurements obtained on an open field site. And these measurements below 30 MHz had been correlated to measurements performed on an OFS.

This report shall not be reproduced except in full, without the written approval of UL Verification Services (Guangzhou) Co., Ltd, Song Shan Lake Branch

4. CALIBRATION AND UNCERTAINTY

4.1. MEASURING INSTRUMENT CALIBRATION

The measuring equipment utilized to perform the tests documented in this report has been calibrated in accordance with the manufacturer's recommendations and is traceable to recognize national standards.

4.2. MEASUREMENT UNCERTAINTY

Where relevant, the following measurement uncertainty levels have been estimated for tests performed on the apparatus:

Test Item	Uncertainty
Conduction emission	3.62 dB
Radiated Emission (Included Fundamental Emission) (9 kHz ~ 30 MHz)	2.2 dB
Radiated Emission (Included Fundamental Emission) (30 MHz ~ 1 GHz)	4.00 dB
Radiated Emission (Included Fundamental Emission) (1 GHz to 40 GHz)	5.78 dB (1 GHz-18 GHz)
	5.23dB (18 GHz-26 GHz)
	5.64 dB (26 GHz-40 GHz)
Bandwidth	1.1 %
Note: This uncertainty represents an expanded uncertainty expressed at approximately the 95 % confidence level using a coverage factor of k=2.	

This report shall not be reproduced except in full, without the written approval of UL Verification Services (Guangzhou) Co., Ltd, Song Shan Lake Branch

5. EQUIPMENT UNDER TEST

5.1. DESCRIPTION OF EUT

EUT Name	LTE MODULE
Model Name	EG25-G

5.2. TEST CHANNEL CONFIGURATION

Mode	TX	Low	Middle	High
LTE Band 2	TX (1.4 MHz)	18607	18900	19193
		1850.7 MHz	1880 MHz	1909.3 MHz
	TX (3 MHz)	18615	18900	19185
		1851.5 MHz	1880 MHz	1908.5 MHz
	TX (5 MHz)	18625	18900	19175
		1852.5 MHz	1880 MHz	1907.5 MHz
	TX (10 MHz)	18650	18900	19150
		1855 MHz	1880 MHz	1905 MHz
	TX (15 MHz)	18675	18900	19125
		1857.5 MHz	1880 MHz	1902.5 MHz
	TX (20 MHz)	18700	18900	19100
		1860 MHz	1880 MHz	1900 MHz

Mode	TX/RX	Low	Middle	High
LTE Band 4	TX (1.4 MHz)	19957	20175	20393
		1710.7 MHz	1732.5 MHz	1754.3 MHz
	TX (3 MHz)	19965	20175	20385
		1711.5 MHz	1732.5 MHz	1753.5 MHz
	TX (5 MHz)	19975	20175	20375
		1712.5 MHz	1732.5 MHz	1752.5 MHz
	TX (10 MHz)	20000	20175	20350
		1715 MHz	1732.5 MHz	1750 MHz
	TX (15 MHz)	20025	20175	20325
		1717.5 MHz	1732.5 MHz	1747.5 MHz
	TX (20 MHz)	20050	20175	20300
		1720 MHz	1732.5 MHz	1745 MHz

This report shall not be reproduced except in full, without the written approval of UL Verification Services (Guangzhou) Co., Ltd, Song Shan Lake Branch

Mode	TX/RX	Low	Middle	High
LTE Band 5	TX (1.4 MHz)	20407	20525	20643
		824.7 MHz	836.5 MHz	848.3 MHz
	TX (3 MHz)	20415	20525	20635
		825.5 MHz	836.5 MHz	847.5 MHz
	TX (5 MHz)	20425	20525	20625
		826.5 MHz	836.5 MHz	846.5 MHz
	TX (10 MHz)	20450	20525	20600
		829.0 MHz	836.5 MHz	844.0 MHz

Mode	TX/RX	Low	Middle	High
LTE Band 7	TX (5 MHz)	20775	21100	21425
		2502.5 MHz	2535.0 MHz	2567.5 MHz
	TX (10 MHz)	20800	21100	21400
		2505.0 MHz	2535.0 MHz	2565.0 MHz
	TX (15 MHz)	20825	21100	21400
		2507.5 MHz	2535.0 MHz	2562.5 MHz
	TX (20 MHz)	20850	21100	21350
		2510.0 MHz	2535.0 MHz	2560.0 MHz
Mode	TX/RX	Low	Middle	High
LTE Band 12	TX (1.4 MHz)	23017	23095	23173
		699.7 MHz	707.5 MHz	715.3 MHz
	TX (3 MHz)	23025	23095	23165
		700.5 MHz	707.5 MHz	714.5 MHz
	TX (5 MHz)	23035	23095	23155
		701.5 MHz	707.5 MHz	713.5 MHz
	TX (10 MHz)	23060	23095	23130
		704.0 MHz	707.5 MHz	711.0 MHz

Mode	TX/RX	Low	Middle	High
LTE Band 13	TX (5 MHz)	23205	23230	23255
		779.5 MHz	782.0 MHz	784.5 MHz
	TX (10 MHz)	23230	23230	23230
		782.0 MHz	782.0 MHz	782.0 MHz

This report shall not be reproduced except in full, without the written approval of UL Verification Services (Guangzhou) Co., Ltd, Song Shan Lake Branch

Mode	TX/RX	Low	Middle	High
LTE Band 25	TX (1.4 MHz)	26047	26365	26683
		1850.7 MHz	1882.5 MHz	1914.3 MHz
	TX (3 MHz)	26055	26365	26675
		1851.5 MHz	1882.5 MHz	1913.5 MHz
	TX (5 MHz)	26065	26365	26665
		1852.5 MHz	1882.5 MHz	1912.5 MHz
	TX (10 MHz)	26090	26365	26640
		1855.0 MHz	1882.5 MHz	1910.0 MHz
	TX (15 MHz)	26115	26365	26615
		1857.5 MHz	1882.5 MHz	1907.5 MHz
	TX (20 MHz)	26140	26365	26590
		1860.0 MHz	1882.5 MHz	1905.0 MHz

Mode	TX/RX	Low	Middle	High
LTE Band 26 814-824 MHz	TX (1.4 MHz)	26697	26740	26783
		814.7 MHz	819.0 MHz	823.3 MHz
	TX (3 MHz)	26705	26740	26775
		815.5 MHz	819.0 MHz	822.5 MHz
	TX (5 MHz)	26715	26740	26765
		816.5 MHz	819.0 MHz	821.5 MHz
	TX (10 MHz)	/	26740	/
		/	819.0 MHz	/

Mode	TX/RX	Low	Middle	High
LTE Band 26 824-849 MHz	TX (1.4 MHz)	26797	26915	27033
		824.7 MHz	836.5 MHz	848.3 MHz
	TX (3 MHz)	26805	26915	27025
		825.5 MHz	836.5 MHz	847.5 MHz
	TX (5 MHz)	26815	26915	27015
		826.5 MHz	836.5 MHz	846.5 MHz
	TX (10 MHz)	26840	26915	26990
		829.0 MHz	836.5 MHz	844.0 MHz
	TX (15 MHz)	26865	26915	26965
		831.5 MHz	836.5 MHz	841.5 MHz

This report shall not be reproduced except in full, without the written approval of UL Verification Services (Guangzhou) Co., Ltd, Song Shan Lake Branch

Mode	TX/RX	Low	Middle	High
LTE Band 38	TX (5 MHz)	37775	38000	38225
		2572.5 MHz	2595.0 MHz	2617.5 MHz
	TX (10 MHz)	37800	38000	38200
		2575.0MHz	2595.0 MHz	2615.0 MHz
	TX (15 MHz)	37825	38000	38175
		2577.5 MHz	2595.0 MHz	2612.5 MHz
	TX (20 MHz)	37850	38000	38150
		2580.0 MHz	2595.0 MHz	2610.0 MHz

Mode	TX/RX	Low	Middle	High
LTE Band 41	TX (5 MHz)	39675	40620	41564
		2498.5 MHz	2593.0 MHz	2687.5 MHz
	TX (10 MHz)	39700	40620	41539
		2501.0 MHz	2593.0 MHz	2685.0 MHz
	TX (15 MHz)	39725	40620	41514
		2503.5 MHz	2593.0 MHz	2682.5 MHz
	TX (20 MHz)	39750	40620	41489
		2506.0 MHz	2593.0 MHz	2680.0 MHz

This report shall not be reproduced except in full, without the written approval of UL Verification Services (Guangzhou) Co., Ltd, Song Shan Lake Branch

5.3. MAXIMUM AVERAGE OUTPUT POWER

Note: The actual measurement is conducted power, the regulations require the measurement of EIRP/ERP, and Section 5.3 is the result after conversion.

LTE Band 2

Part 24								
EIRP Limit(W)		2						
Antenna Gain (dBi)		2.5						
Bandwidth (MHz)	Modulation	Low Frequency (MHz)	Upper Frequency (MHz)	Conducted Average (dBm)	EIRP Average (dBm)	EIRP Average(W)	99%OBW (MHz)	Emission Designator
1.4	QPSK	1850.7	1909.3	21.86	24.36	0.27	1.084	1M08G7D
	16QAM			21.15	23.65	0.23	1.083	1M08W7D
3	QPSK	1851.5	1908.5	21.61	24.11	0.26	2.684	2M68G7D
	16QAM			20.74	23.24	0.21	2.685	2M69W7D
5	QPSK	1852.5	1907.5	21.9	24.4	0.28	4.486	4M49G7D
	16QAM			20.99	23.49	0.22	4.484	4M48W7D
10	QPSK	1855.0	1905.0	21.85	24.35	0.27	8.946	8M95G7D
	16QAM			21.31	23.81	0.24	8.947	8M95W7D
15	QPSK	1857.5	1902.5	21.96	24.46	0.28	13.421	13M4G7D
	16QAM			20.83	23.33	0.22	13.42	13M4W7D
20	QPSK	1860.0	1900.0	21.99	24.49	0.28	17.95	18M0G7D
	16QAM			21.44	23.94	0.25	17.946	18M0W7D

LTE Band 4

Part 27								
EIRP Limit(W)		1.00						
Antenna Gain (dBi)		2.8						
Bandwidth (MHz)	Modulation	Low Frequency (MHz)	Upper Frequency (MHz)	Conducted Average (dBm)	EIRP Average (dBm)	EIRP Average(W)	99%OBW (MHz)	Emission Designator
1.4	QPSK	1710.7	1754.3	22.69	25.49	0.35	1.093	1M09G7D
	16QAM			22.06	24.86	0.31	1.09	1M09W7D
3	QPSK	1711.5	1753.5	22.59	25.39	0.35	2.695	2M70G7D
	16QAM			21.62	24.42	0.28	2.692	2M69W7D
5	QPSK	1712.5	1752.5	22.72	25.52	0.36	4.498	4M50G7D
	16QAM			21.52	24.32	0.27	4.501	4M50W7D
10	QPSK	1715.0	1750.0	22.72	25.52	0.36	8.95	8M95G7D
	16QAM			21.95	24.75	0.30	8.944	8M94W7D
15	QPSK	1717.5	1747.5	22.68	25.48	0.35	13.421	13M4G7D
	16QAM			22.27	25.07	0.32	13.408	13M4W7D
20	QPSK	1720.0	1745.0	22.86	25.66	0.37	17.92	17M9G7D
	16QAM			22.44	25.24	0.33	17.904	17M9W7D

This report shall not be reproduced except in full, without the written approval of UL Verification Services (Guangzhou) Co., Ltd, Song Shan Lake Branch

LTE Band 5

Part 22								
ERP Limit(W)		7.00						
Antenna Gain (dBi)		1.2						
Bandwidth (MHz)	Modulation	Low Frequency (MHz)	Upper Frequency (MHz)	Conducted Average (dBm)	ERP Average (dBm)	ERP Average(W)	99%OBW (MHz)	Emission Designator
1.4	QPSK	824.7	848.3	23.11	22.16	0.16	1.088	1M09G7D
	16QAM			22.48	21.53	0.14	1.088	1M09W7D
3	QPSK	825.5	847.5	23.04	22.09	0.16	2.692	2M70G7D
	16QAM			22.2	21.25	0.13	2.69	2M70W7D
5	QPSK	826.5	846.5	23.16	22.21	0.17	4.497	4M50G7D
	16QAM			22.17	21.22	0.13	4.506	4M50W7D
10	QPSK	829.0	844.0	23.24	22.29	0.17	8.956	8M96G7D
	16QAM			22.16	21.21	0.13	8.949	8M95W7D

LTE Band 7

Part 27								
EIRP Limit(W)		2						
Antenna Gain (dBi)		2						
Bandwidth (MHz)	Modulation	Low Frequency (MHz)	Upper Frequency (MHz)	Conducted Average (dBm)	EIRP Average (dBm)	EIRP Average(W)	99%OBW (MHz)	Emission Designator
5	QPSK	2502.5	2567.5	22.07	24.07	0.26	4.496	4M50G7D
	16QAM			20.92	22.92	0.20	4.504	4M50W7D
10	QPSK	2505.0	2565.0	22.37	24.37	0.27	8.963	8M96G7D
	16QAM			21.39	23.39	0.22	8.951	8M95W7D
15	QPSK	2507.5	2562.5	22.35	24.35	0.27	13.449	13M5G7D
	16QAM			21.22	23.22	0.21	13.433	13M4W7D
20	QPSK	2510.0	2560.0	22.56	24.56	0.29	17.975	18M0G7D
	16QAM			21.83	23.83	0.24	17.983	18M0W7D

LTE Band 12

Part 27								
ERP Limit(W)		3						
Antenna Gain (dBi)		-2						
Bandwidth (MHz)	Modulation	Low Frequency (MHz)	Upper Frequency (MHz)	Conducted Average (dBm)	ERP Average (dBm)	ERP Average(W)	99%OBW (MHz)	Emission Designator
1.4	QPSK	699.7	715.3	23.49	19.34	0.09	1.091	1M09G7D
	16QAM			22.97	18.82	0.08	1.089	1M09W7D
3	QPSK	700.5	714.5	23.49	19.34	0.09	2.692	2M69G7D
	16QAM			22.33	18.18	0.07	2.691	2M69W7D
5	QPSK	701.5	713.5	23.37	19.22	0.08	4.496	4M50G7D
	16QAM			22.48	18.33	0.07	4.507	4M51W7D
10	QPSK	704.0	711.0	23.62	19.47	0.09	8.96	8M96G7D
	16QAM			23.15	19	0.08	8.957	8M96W7D

This report shall not be reproduced except in full, without the written approval of UL Verification Services (Guangzhou) Co., Ltd, Song Shan Lake Branch

LTE Band 13

Part 27								
ERP Limit(W)		3						
Antenna Gain (dBi)		-2						
Bandwidth (MHz)	Modulation	Low Frequency (MHz)	Upper Frequency (MHz)	Conducted Average (dBm)	ERP Average (dBm)	ERP Average(W)	99%OBW (MHz)	Emission Designator
5	QPSK	779.5	784.5	23.51	19.36	0.09	4.494	4M49G7D
	16QAM			22.65	18.5	0.07	4.51	4M51W7D
10	QPSK	782	782	23.57	19.42	0.09	8.965	8M97G7D
	16QAM			22.41	18.26	0.07	8.952	8M95W7D

LTE Band 25

Part 24								
EIRP Limit(W)		2						
Antenna Gain (dBi)		2.5						
Bandwidth (MHz)	Modulation	Low Frequency (MHz)	Upper Frequency (MHz)	Conducted Average (dBm)	EIRP Average (dBm)	EIRP Average(W)	99%OBW (MHz)	Emission Designator
1.4	QPSK	1850.7	1914.3	22.35	24.85	0.31	1.088	1M09G7D
	16QAM			21.92	24.42	0.28	1.091	1M09W7D
3	QPSK	1851.5	1913.5	22.41	24.91	0.31	2.695	2M70G7D
	16QAM			21.71	24.21	0.26	2.691	2M69W7D
5	QPSK	1852.5	1912.5	22.46	24.96	0.31	4.494	4M49G7D
	16QAM			21.57	24.07	0.26	4.506	4M51W7D
10	QPSK	1855.0	1910.0	22.54	25.04	0.32	8.965	8M97G7D
	16QAM			21.89	24.39	0.27	8.956	8M96W7D
15	QPSK	1857.5	1907.5	22.56	25.06	0.32	13.464	13M5G7D
	16QAM			22.01	24.51	0.28	13.425	13M4W7D
20	QPSK	1860.0	1905.0	22.64	25.14	0.33	17.971	18M0G7D
	16QAM			22.01	24.51	0.28	17.973	18M0W7D

LTE Band 26-1

Part 90S								
Conducted Limit(W)		100						
Antenna Gain (dBi)		1.2						
Bandwidth (MHz)	Modulation	Low Frequency (MHz)	Upper Frequency (MHz)	Conducted Average (dBm)	EIRP Average (dBm)	EIRP Average(W)	99%OBW (MHz)	Emission Designator
1.4	QPSK	814.7	823.3	23.18	/	/	1.09	1M09G7D
	16QAM			22.33	/	/	1.09	1M09W7D
3	QPSK	815.5	822.5	23.17	/	/	2.694	2M70G7D
	16QAM			22.39	/	/	2.69	2M70W7D
5	QPSK	816.5	821.5	23.22	/	/	4.495	4M50G7D
	16QAM			22.23	/	/	4.506	4M51W7D
10	QPSK	819	819	23.1	/	/	8.978	8M98G7D
	16QAM			22.7	/	/	8.972	8M96W7D

This report shall not be reproduced except in full, without the written approval of UL Verification Services (Guangzhou) Co., Ltd, Song Shan Lake Branch

LTE Band 26-2

Part 22								
ERP Limit(W)		7						
Antenna Gain (dBi)		1.2						
Bandwidth (MHz)	Modulation	Low Frequency (MHz)	Upper Frequency (MHz)	Conducted Average (dBm)	ERP Average (dBm)	ERP Average(W)	99%OBW (MHz)	Emission Designator
1.4	QPSK	824.7	848.3	23.09	22.14	0.16	1.089	1M09G7D
	16QAM			22.29	21.34	0.14	1.09	1M09W7D
3	QPSK	825.5	847.5	22.98	22.03	0.16	2.693	2M70G7D
	16QAM			22.14	21.19	0.13	2.691	2M70W7D
5	QPSK	826.5	846.5	22.77	21.82	0.15	4.494	4M49G7D
	16QAM			21.74	20.79	0.12	4.506	4M51W7D
10	QPSK	829	844	22.81	21.86	0.15	8.956	8M96G7D
	16QAM			22.17	21.22	0.13	8.949	8M95W7D
15	QPSK	831.5	841.5	22.75	21.8	0.15	13.434	13M4G7D
	16QAM			22.37	21.42	0.14	13.431	13M4W7D

LTE Band 38

Part 27								
EIRP Limit(W)		2						
Antenna Gain (dBi)		2						
Bandwidth (MHz)	Modulation	Low Frequency (MHz)	Upper Frequency (MHz)	Conducted Average (dBm)	EIRP Average (dBm)	EIRP Average(W)	99%OBW (MHz)	Emission Designator
5	QPSK	2572.5	2617.5	21.81	23.81	0.24	4.496	4M50G7D
	16QAM			21.16	23.16	0.21	4.488	4M49W7D
10	QPSK	2575.0	2615.0	21.95	23.95	0.25	8.957	8M96G7D
	16QAM			21.52	23.52	0.22	8.946	8M95W7D
15	QPSK	2577.5	2612.5	21.97	23.97	0.25	13.431	13M4G7D
	16QAM			20.98	22.98	0.20	13.418	13M4W7D
20	QPSK	2580.0	2610.0	21.99	23.99	0.25	17.94	17M9G7D
	16QAM			21.43	23.43	0.22	17.93	17M9W7D

LTE Band 41

Part 27								
EIRP Limit(W)		2						
Antenna Gain (dBi)		2						
Bandwidth (MHz)	Modulation	Low Frequency (MHz)	Upper Frequency (MHz)	Conducted Average (dBm)	EIRP Average (dBm)	EIRP Average(W)	99%OBW (MHz)	Emission Designator
5	QPSK	2498.5	2687.5	22.21	24.21	0.26	4.497	4M50G7D
	16QAM			21.56	23.56	0.23	4.503	4M50W7D
10	QPSK	2501.0	2685.0	22.42	24.42	0.28	8.96	8M96G7D
	16QAM			21.87	23.87	0.24	8.947	8M95W7D
15	QPSK	2503.5	2682.5	22.44	24.44	0.28	13.424	13M4G7D
	16QAM			21.42	23.42	0.22	13.412	13M4W7D
20	QPSK	2506.0	2680.0	22.84	24.84	0.30	17.939	17M9G7D
	16QAM			21.79	23.79	0.24	17.921	17M9W7D

This report shall not be reproduced except in full, without the written approval of UL Verification Services (Guangzhou) Co., Ltd, Song Shan Lake Branch

5.4. WORST-CASE CONFIGURATION AND MODE

During all testing, EUT is in link mode with base station emulator at maximum power level. The worst-case scenario for all measurements is based on the average conducted output power measurement investigation results. Output power measurements were measured on QPSK, 16QAM. All testing was performed using QPSK and 16QAM modulations to represent the worst case.

The radiated spurious emissions measurements were carried out in semi-anechoic chamber with 3-meter test range, and EUT was investigated in three orthogonal orientations X,Y and Z. It was determined that X orientation was the worst-case.

Radiated spurious emissions were investigated below 30 MHz, 30 MHz - 1 GHz and above 1 GHz. There were no emissions found on below 1GHz and above 18 GHz, the emissions between 1 GHz – 18 GHz were tested the highest transmitting power channel and the worse configuration.

Test Items	Worst case test configuration			
Description	Modulation	Channel	Bandwidth (MHz)	RB Configuration
Radiated Spurious Emissions	QPSK	L, M, H	Maximum BW	RB size=1, RB Location= Low

This report shall not be reproduced except in full, without the written approval of UL Verification Services (Guangzhou) Co., Ltd, Song Shan Lake Branch

5.5. DESCRIPTION OF AVAILABLE ANTENNAS

Antenna	Model	Antenna Type	MAX Antenna Gain (dBi)
1	030358F4GA	Internal Antenna	/
2	030358F4GA	Internal Antenna	/

Antenna	Band	Antenna Type	MAX Antenna Gain (dBi)
1	LTE Band 2	FPC	2.5
1	LTE Band 4	FPC	2.8
1	LTE Band 5	FPC	1.2
1	LTE Band 7	FPC	2
1	LTE Band 12	FPC	-2
1	LTE Band 13	FPC	-2
1	LTE Band 25	FPC	2.5
1	LTE Band 26	FPC	1.2
1	LTE Band 38	FPC	2
1	LTE Band 41	FPC	2

Band	Transmit and Receive Mode	Description
LTE Band 2	☒1TX, 1RX	Antenna 1 can be used as transmitting/receiving antenna.
LTE Band 4	☒1TX, 1RX	Antenna 1 can be used as transmitting/receiving antenna.
LTE Band 5	☒1TX, 1RX	Antenna 1 can be used as transmitting/receiving antenna.
LTE Band 7	☒1TX, 1RX	Antenna 1 can be used as transmitting/receiving antenna.
LTE Band 12	☒1TX, 1RX	Antenna 1 can be used as transmitting/receiving antenna.
LTE Band 13	☒1TX, 1RX	Antenna 1 can be used as transmitting/receiving antenna.
LTE Band 25	☒1TX, 1RX	Antenna 1 can be used as transmitting/receiving antenna.
LTE Band 26	☒1TX, 1RX	Antenna 1 can be used as transmitting/receiving antenna.
LTE Band 38	☒1TX, 1RX	Antenna 1 can be used as transmitting/receiving antenna.
LTE Band 41	☒1TX, 1RX	Antenna 1 can be used as transmitting/receiving antenna.

Note: The value of the antenna gain was declared by customer.

This report shall not be reproduced except in full, without the written approval of UL Verification Services (Guangzhou) Co., Ltd, Song Shan Lake Branch

5.6. DESCRIPTION OF TEST SETUP

Conducted

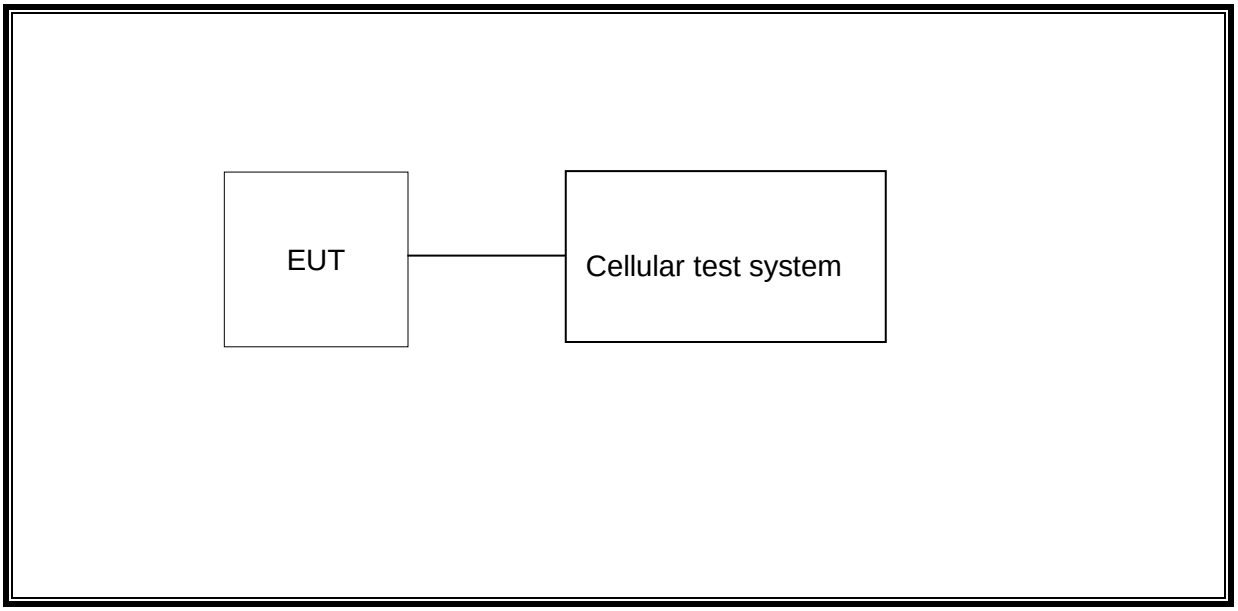

Radiated

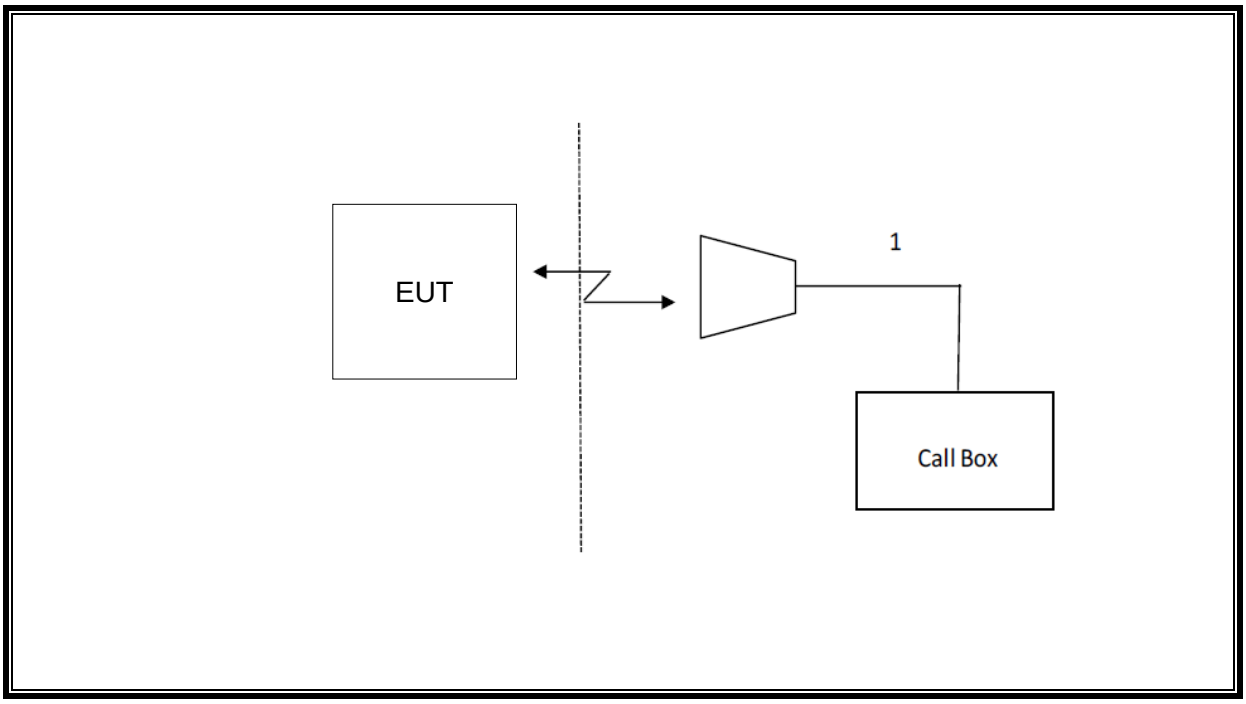

This report shall not be reproduced except in full, without the written approval of UL Verification Services (Guangzhou) Co., Ltd, Song Shan Lake Branch

6. MEASURING INSTRUMENT AND SOFTWARE USED

Antenna Terminal Test						
Instrument						
Used	Equipment	Manufacturer	Model No.	Serial No.	Last Cal.	Next Cal.
☑	Spectrum Analyzer	R&S	FSW40	S421035420	Oct.30, 2021	Oct.29, 2022
☑	Wideband Radio Communication Tester	R&S	CMW500	155523	Oct.30, 2021	Oct.29, 2022
☑	DC Power Supply	Array	3662A	A1512015	Oct.30, 2021	Oct.29, 2022
Software						
Used	Description		Manufacturer	Name		Version
☑	Tonsend Cellular Test System		Tonsend	JS1120 RF Auto Test System		3.1.46
Radiated Test						
Instrument						
Used	Equipment	Manufacturer	Model No.	Serial No.	Last Cal.	Next Cal.
☑	MXE EMI Receiver	KESIGHT	N9038A	MY56400036	Oct.30, 2021	Oct.29, 2022
☑	Hybrid Log Periodic Antenna	TDK	HLP-3003C	130960	Aug.02, 2021	Aug.01, 2024
☑	Preamplifier	HP	8447D	2944A09099	Oct.30, 2021	Oct.29, 2022
☑	EMI Measurement Receiver	R&S	ESR26	101377	Oct.30, 2021	Oct.29, 2022
☑	Horn Antenna	TDK	HRN-0118	130939	July 20, 2021	July 19, 2024
☑	High Gain Horn Antenna	Schwarzbeck	BBHA-9170	691	July 20, 2021	July 19, 2024
☑	Preamplifier	TDK	PA-02-0118	TRS-305-00066	Oct.31, 2021	Oct.30, 2022
☑	Preamplifier	TDK	PA-02-2	TRS-307-00003	Oct.31, 2021	Oct.30, 2022
☑	Loop antenna	Schwarzbeck	1519B	00008	Jan.17,2022	Jan.17,2025
☑	High Pass Filter	Wi	WHKX10-2700-3000-18000-40SS	23	Oct.31, 2021	Oct.30, 2022
Software						
Used	Description		Manufacturer	Name		Version
☑	Test Software for Radiated disturbance		Farad	EZ-EMC		Ver. UL-3A1

This report shall not be reproduced except in full, without the written approval of UL Verification Services (Guangzhou) Co., Ltd, Song Shan Lake Branch

7. ANTENNA TERMINAL TEST RESULTS

Note: All the conducted test data transfer to the ERP/EIRP values, It comply with the limit requirement, Only the Conducted test data were showed in the test report.

7.1. EFFECTIVE (ISOTROPIC) RADIATED POWER OF TRANSMITTER

RULE PART(S)

FCC: §2.1046, §22.913, §24.232, §27.50, §90

LIMITS

22.913(a) The ERP of mobile transmitters and auxiliary test transmitters must not exceed 7 Watts.
24.232(c) Mobile/portable stations are limited to 2 watts e.i.r.p. peak power and the equipment must employ means to limit the power to the minimum necessary for successful communications.
27.50(c) Portable stations (hand-held devices) in the 600 MHz uplink band and the 698-746 MHz band, and fixed and mobile stations in the 600 MHz uplink band are limited to 3 watts ERP.
27.50(d) Fixed, mobile, and portable (hand-held) stations operating in the 1710-1755 MHz band and mobile and portable stations operating in the 1695-1710 MHz and 1755-1780 MHz bands are limited to 1 watts EIRP.
27.50(h) Mobile stations are limited to 2.0 watts EIRP. All user stations are limited to 2.0 watts transmitter output power.
In addition, when the transmitter power is measured in terms of average value, the peak-to-average ratio of the power shall not exceed 13 dB.

TEST PROCEDURE

Refer to ANSI C63.26:2015 and KDB 971168 D01 Section 5.6
ERP/ EIRP = PMeas + GT − LC
where:
ERP or EIRP = effective or equivalent isotropically radiated power, respectively (expressed in the same units as PMeas, typically dBW or dBm);
PMeas = measured transmitter output power or PSD, in dBm or dBW;
GT = gain of the transmitting antenna, in dBd (ERP) or dBi (EIRP);
LC = signal attenuation in the connecting cable between the transmitter and antenna, in dB
The transmitter has a maximum radiated ERP / EIRP output powers as follows:

TEST SETUP

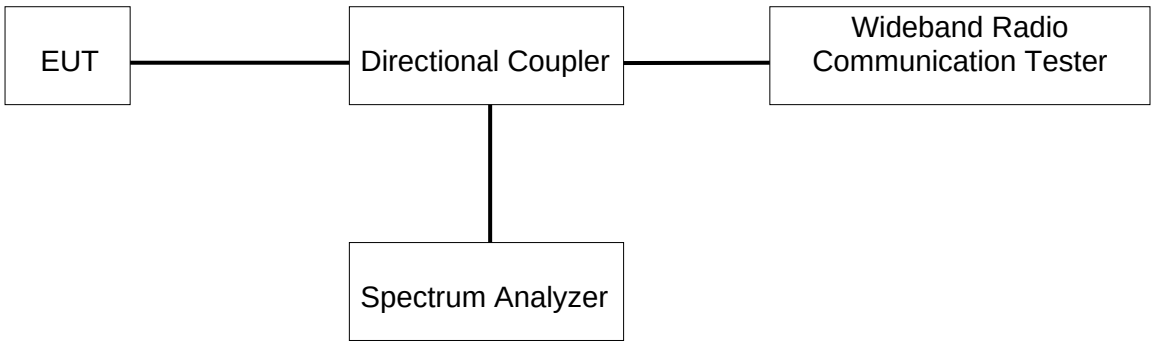

This report shall not be reproduced except in full, without the written approval of UL Verification Services (Guangzhou) Co., Ltd, Song Shan Lake Branch

TEST ENVIRONMENT

Temperature	23.1°C	Relative Humidity	59.4%
Atmosphere Pressure	101kPa	Test Voltage	DC 5.8 V

MAXUMUM EIRP/ERP FOR EACH BAND

LTE Band 2

Part 24						
EIRP Limit(W)		2				
Antenna Gain (dBi)		2.5				
Bandwidth (MHz)	Modulation	Low Frequency (MHz)	Upper Frequency (MHz)	Conducted Average (dBm)	EIRP Average (dBm)	EIRP Average (W)
20	QPSK	1860.0	1900.0	21.99	24.49	0.28

LTE Band 4

Part 27						
EIRP Limit(W)		1.00				
Antenna Gain (dBi)		2.8				
Bandwidth (MHz)	Modulation	Low Frequency (MHz)	Upper Frequency (MHz)	Conducted Average (dBm)	EIRP Average (dBm)	EIRP Average (W)
20	QPSK	1720.0	1745.0	22.86	25.66	0.37

LTE Band 5

Part 22H						
ERP Limit(W)		7.00				
Antenna Gain (dBi)		1.2				
Bandwidth (MHz)	Modulation	Low Frequency (MHz)	Upper Frequency (MHz)	Conducted Average (dBm)	ERP Average (dBm)	ERP Average (W)
10	QPSK	829.0	844.0	23.24	22.29	0.17

LTE Band7

Part 27						
EIRP Limit(W)		2.00				
Antenna Gain (dBi)		2				
Bandwidth (MHz)	Modulation	Low Frequency (MHz)	Upper Frequency (MHz)	Conducted Average (dBm)	EIRP Average (dBm)	EIRP Average (W)
20	QPSK	2510.0	2560.0	22.56	24.56	0.29

This report shall not be reproduced except in full, without the written approval of UL Verification Services (Guangzhou) Co., Ltd, Song Shan Lake Branch

LTE Band12

Part 27						
ERP Limit(W)		3.00				
Antenna Gain (dBi)		-2				
Bandwidth (MHz)	Modulation	Low Frequency (MHz)	Upper Frequency (MHz)	Conducted Average (dBm)	ERP Average (dBm)	ERP Average (W)
10	QPSK	704.0	711.0	23.62	19.47	0.09

LTE Band 13

ERP Limit(W)		3.00				
Antenna Gain (dBi)		-2				
Bandwidth (MHz)	Modulation	Low Frequency (MHz)	Upper Frequency (MHz)	Conducted Average (dBm)	ERP Average (dBm)	ERP Average (W)
10	QPSK	782	782	23.57	19.42	0.09

LTE Band 25

Part 24						
EIRP Limit(W)		2.00				
Antenna Gain (dBi)		2.5				
Bandwidth (MHz)	Modulation	Low Frequency (MHz)	Upper Frequency (MHz)	Conducted Average (dBm)	EIRP Average (dBm)	EIRP Average (W)
20	QPSK	1860.0	1905.0	22.64	25.14	0.33

LTE Band 26-1

Part 90S						
Conducted Limit(W)		100.00				
Antenna Gain (dBi)		1.2				
Bandwidth (MHz)	Modulation	Low Frequency (MHz)	Upper Frequency (MHz)	Conducted Average (dBm)	ERP Average (dBm)	ERP Average (W)
5	QPSK	816.5	821.5	23.22	/	/

LTE Band 26-2

Part 22						
ERP(W)		7				
Antenna Gain (dBi)		1.2				
Bandwidth (MHz)	Modulation	Low Frequency (MHz)	Upper Frequency (MHz)	Conducted Average (dBm)	ERP Average (dBm)	ERP Average (W)
1.4	QPSK	824.7	848.3	23.09	22.14	0.16

This report shall not be reproduced except in full, without the written approval of UL Verification Services (Guangzhou) Co., Ltd, Song Shan Lake Branch

LTE Band 38

Part 27						
EIRP Limit(W)		2.00				
Antenna Gain (dBi)		2				
Bandwidth (MHz)	Modulation	Low Frequency (MHz)	Upper Frequency (MHz)	Conducted Average (dBm)	EIRP Average (dBm)	EIRP Average (W)
20	QPSK	2580.0	2610.0	21.99	23.99	0.25

LTE Band 41

Part 27						
EIRP Limit(W)		2.00				
Antenna Gain (dBi)		2				
Bandwidth (MHz)	Modulation	Low Frequency (MHz)	Upper Frequency (MHz)	Conducted Average (dBm)	EIRP Average (dBm)	EIRP Average (W)
20	QPSK	2506.0	2680.0	22.84	24.84	0.30

This report shall not be reproduced except in full, without the written approval of UL Verification Services (Guangzhou) Co., Ltd, Song Shan Lake Branch

RESULT

LTE FDD B2				Conducted Power(dBm)		
Bandwidth	Modulation	RB size	RB offset	Channel 18607	Channel 18900	Channel 19193
1.4MHz	QPSK	1	0	21.51	**21.86**	21.46
		1	2	21.32	21.67	21.43
		1	5	21.31	21.71	21.44
		3	0	21.47	21.65	21.44
		3	1	21.29	21.63	21.52
		3	3	21.27	21.61	21.39
		6	0	20.3	20.74	20.52
	16QAM	1	0	20.45	20.85	20.52
		1	2	20.59	**21.15**	20.52
		1	5	20.4	20.78	20.31
		3	0	20.19	20.59	20.4
		3	1	20.29	20.5	20.39
		3	3	20.2	20.62	20.52
		6	0	19.35	19.91	19.46
Bandwidth	Modulation	RB size	RB offset	Channel 18615	Channel 18900	Channel 19185
3MHz	QPSK	1	0	21.36	21.58	21.45
		1	8	21.46	21.51	21.36
		1	14	21.42	**21.61**	21.33
		8	0	20.3	20.65	20.4
		8	4	20.33	20.67	20.43
		8	7	20.45	20.65	20.37
		15	0	20.36	20.58	20.41
	16QAM	1	0	20.21	20.5	20.26
		1	8	20.23	20.4	20.25
		1	14	**20.74**	20.46	20.58
		8	0	19.63	19.89	19.36
		8	4	19.65	19.89	19.63
		8	7	19.41	19.72	19.58
		15	0	19.37	19.6	19.34
Bandwidth	Modulation	RB size	RB offset	Channel 18625	Channel 18900	Channel 19175
5MHz	QPSK	1	0	21.23	21.62	21.53
		1	12	21.4	**21.9**	21.44
		1	24	21.51	21.74	21.33
		12	0	20.3	20.69	20.47
		12	6	20.32	20.7	20.5
		12	13	20.48	20.64	20.37
		25	0	20.36	20.64	20.4
	16QAM	1	0	19.98	20.45	20.72

This report shall not be reproduced except in full, without the written approval of UL Verification Services (Guangzhou) Co., Ltd, Song Shan Lake Branch

		1	12	20.08	20.69	20.61
		1	24	20.16	**20.99**	20.43
		12	0	19.31	19.79	19.57
		12	6	19.42	19.65	19.5
		12	13	19.51	19.82	19.35
		25	0	19.3	19.83	19.55
Bandwidth	Modulation	RB size	RB offset	Channel 18650	Channel 18900	Channel 19150
10MHz	QPSK	1	0	21.39	21.51	21.51
		1	24	21.72	**21.85**	21.65
		1	49	21.69	21.72	21.39
		25	0	20.44	20.81	20.71
		25	12	20.46	20.74	20.68
		25	25	20.59	20.68	20.53
		50	0	20.54	20.75	20.6
	16QAM	1	0	20.45	20.56	20.77
		1	24	21.16	**21.31**	20.72
		1	49	20.57	20.81	20.69
		25	0	19.44	19.58	19.72
		25	12	19.35	19.66	19.9
		25	25	19.65	19.79	19.66
		50	0	19.72	19.73	19.74
Bandwidth	Modulation	RB size	RB offset	Channel 18675	Channel 18900	Channel 19125
15MHz	QPSK	1	0	21.46	21.58	21.64
		1	38	21.67	21.83	21.55
		1	74	21.83	**21.96**	21.29
		36	0	20.57	20.8	20.73
		36	18	20.59	20.73	20.78
		36	37	20.6	20.73	20.77
		75	0	20.58	20.66	20.61
	16QAM	1	0	20.5	20.61	20.73
		1	38	20.66	20.71	20.39
		1	74	**20.83**	**20.83**	20.32
		36	0	19.67	19.69	19.76
		36	18	19.68	19.7	19.89
		36	37	19.58	19.82	19.93
		75	0	19.55	19.85	19.61
Bandwidth	Modulation	RB size	RB offset	Channel 18700	Channel 18900	Channel 19100
20MHz	QPSK	1	0	21.39	21.51	21.75
		1	49	**21.99**	21.95	21.8
		1	99	21.62	21.87	21.52
		50	0	20.6	20.63	20.73
		50	25	20.63	20.69	20.76

This report shall not be reproduced except in full, without the written approval of UL Verification Services (Guangzhou) Co., Ltd, Song Shan Lake Branch

		50	50	20.78	20.75	20.65
		100	0	20.58	20.77	20.61
	16QAM	1	0	20.76	21.01	20.62
		1	49	21.24	**21.44**	20.3
		1	99	20.61	21.16	20.27
		50	0	19.79	19.78	19.85
		50	25	19.71	19.78	20.05
		50	50	19.79	19.99	19.59
		100	0	19.76	19.87	19.83

LTE FDD B4				**Conducted Power(dBm)**		
Bandwidth	Modulation	RB size	RB offset	Channel 19957	Channel 20175	Channel 20393
1.4MHz	QPSK	1	0	21.58	22.29	22.35
		1	2	22.39	22.47	22.65
		1	5	22.36	22.57	**22.69**
		3	0	22.44	22.4	22.45
		3	1	22.44	22.31	22.47
		3	3	22.48	22.36	22.57
		6	0	21.38	21.43	21.63
	16QAM	1	0	21.58	21.63	21.65
		1	2	21.44	21.96	**22.06**
		1	5	21.56	21.68	22.02
		3	0	21.39	21.42	21.4
		3	1	21.39	21.32	21.4
		3	3	21.42	21.29	21.62
		6	0	20.39	20.59	20.61
Bandwidth	Modulation	RB size	RB offset	Channel 19965	Channel 20175	Channel 20385
3MHz	QPSK	1	0	22.48	22.43	22.42
		1	8	22.34	22.47	22.43
		1	14	22.36	22.56	**22.59**
		8	0	21.52	21.45	21.58
		8	4	21.45	21.38	21.53
		8	7	21.39	21.48	21.47
		15	0	21.48	21.5	21.5
	16QAM	1	0	21.43	21.39	21.4
		1	8	21.22	21.38	21.41
		1	14	21.2	21.41	**21.62**
		8	0	20.49	20.53	20.66
		8	4	20.66	20.62	20.67
		8	7	20.63	20.65	20.62
		15	0	20.39	20.71	20.7
Bandwidth	Modulation			Channel	Channel	Channel

This report shall not be reproduced except in full, without the written approval of UL Verification Services (Guangzhou) Co., Ltd, Song Shan Lake Branch

		RB size	RB offset	19975	20175	20375
5MHz	QPSK	1	0	22.47	22.41	22.5
		1	12	22.58	22.48	22.52
		1	24	22.33	22.51	**22.72**
		12	0	21.45	21.45	21.6
		12	6	21.38	21.46	21.53
		12	13	21.31	21.47	21.68
		25	0	21.39	21.39	21.56
	16QAM	1	0	21.25	21.1	21.24
		1	12	21.1	21.27	21.33
		1	24	21.08	21.26	**21.52**
		12	0	20.48	20.56	20.63
		12	6	20.4	20.39	20.74
		12	13	20.31	20.68	20.69
		25	0	20.5	20.61	20.77
Bandwidth	Modulation	RB size	RB offset	Channel	Channel	Channel
				20000	20175	20350
10MHz	QPSK	1	0	22.54	22.42	22.6
		1	24	22.52	22.67	22.6
		1	49	22.43	22.51	**22.72**
		25	0	21.44	21.49	21.61
		25	12	21.39	21.42	21.57
		25	25	21.37	21.58	21.57
		50	0	21.37	21.38	21.62
	16QAM	1	0	21.56	21.41	21.53
		1	24	**21.95**	21.86	21.87
		1	49	21.47	21.49	21.88
		25	0	20.56	20.51	20.56
		25	12	20.4	20.51	20.68
		25	25	20.54	20.69	20.66
		50	0	20.55	20.57	20.72
Bandwidth	Modulation	RB size	RB offset	Channel	Channel	Channel
				20025	20175	20325
15MHz	QPSK	1	0	22.63	22.34	**22.68**
		1	38	22.48	22.51	22.49
		1	74	22.44	22.49	22.51
		36	0	21.39	21.31	21.54
		36	18	21.34	21.3	21.5
		36	37	21.34	21.34	21.5
		75	0	21.3	21.33	21.5
	16QAM	1	0	21.53	21.3	21.71
		1	38	22.16	**22.27**	21.46
		1	74	21.49	21.42	21.66
		36	0	20.24	20.29	20.67

This report shall not be reproduced except in full, without the written approval of UL Verification Services (Guangzhou) Co., Ltd, Song Shan Lake Branch

		36	18	20.34	20.48	20.67
		36	37	20.43	20.29	20.65
		75	0	20.37	20.41	20.57
Bandwidth	Modulation	RB size	RB offset	Channel 20050	Channel 20175	Channel 20300
20MHz	QPSK	1	0	22.23	22.36	22.6
		1	49	22.71	**22.86**	22.83
		1	99	22.4	22.43	22.49
		50	0	21.29	21.34	21.7
		50	25	21.23	21.33	21.67
		50	50	21.35	21.5	21.48
		100	0	21.29	21.31	21.59
	16QAM	1	0	21.57	21.58	21.9
		1	49	21.78	**22.44**	22
		1	99	21.6	21.86	21.74
		50	0	20.42	20.55	20.83
		50	25	20.43	20.55	20.76
		50	50	20.58	20.47	20.67
		100	0	20.48	20.49	20.68

LTE FDD B5				**Conducted Power(dBm)**		
Bandwidth	Modulation	RB size	RB offset	Channel 20407	Channel 20525	Channel 20643
1.4MHz	QPSK	1	0	23.03	22.93	22.66
		1	2	23.09	**23.11**	22.97
		1	5	23.09	23.01	22.97
		3	0	23	22.91	22.76
		3	1	22.96	22.91	22.84
		3	3	22.9	22.97	22.86
		6	0	21.98	22.02	21.8
	16QAM	1	0	22.17	21.83	22.28
		1	2	**22.48**	22.01	22.33
		1	5	22.18	21.85	22.25
		3	0	21.88	21.86	21.66
		3	1	21.89	21.86	21.74
		3	3	21.8	21.9	21.7
		6	0	21.11	20.97	21.01
Bandwidth	Modulation	RB size	RB offset	Channel 20415	Channel 20525	Channel 20635
3MHz	QPSK	1	0	22.84	22.75	22.67
		1	8	22.87	22.92	22.89
		1	14	22.91	**23.04**	22.98
		8	0	21.9	22.02	21.81
		8	4	21.93	21.95	21.83
		8	7	21.92	21.95	21.88

This report shall not be reproduced except in full, without the written approval of UL Verification Services (Guangzhou) Co., Ltd, Song Shan Lake Branch

		15	0	21.99	22.03	21.87
	16QAM	1	0	21.91	21.97	21.74
		1	8	21.72	**22.2**	21.74
		1	14	21.9	21.94	21.77
		8	0	21.08	21.08	20.89
		8	4	21.22	21.07	20.92
		8	7	20.97	20.96	20.79
		15	0	20.91	20.84	20.95
Bandwidth	Modulation	RB size	RB offset	Channel 20425	Channel 20525	Channel 20625
5MHz	QPSK	1	0	22.82	22.79	22.69
		1	12	23.07	**23.16**	23.08
		1	24	22.84	22.92	22.76
		12	0	21.88	21.92	21.81
		12	6	21.93	21.87	21.86
		12	13	21.93	21.9	21.84
		25	0	21.83	21.82	21.77
	16QAM	1	0	21.59	**22.17**	21.49
		1	12	21.64	21.94	21.54
		1	24	21.42	21.79	21.52
		12	0	20.88	21.04	20.87
		12	6	20.67	21.05	20.89
		12	13	20.98	20.87	20.73
		25	0	20.84	20.8	20.71
Bandwidth	Modulation	RB size	RB offset	Channel 20450	Channel 20525	Channel 20600
10MHz	QPSK	1	0	22.8	22.63	22.77
		1	24	23.03	**23.24**	22.79
		1	49	22.95	22.82	22.72
		25	0	21.96	21.95	21.94
		25	12	21.97	21.93	22
		25	25	21.96	21.98	21.85
		50	0	21.89	21.91	21.94
	16QAM	1	0	21.96	21.88	21.9
		1	24	**22.16**	21.92	22.01
		1	49	21.95	21.74	21.77
		25	0	20.96	20.86	20.91
		25	12	20.87	21.05	20.92
		25	25	20.87	20.94	20.65
		50	0	20.98	20.83	20.74

LTE FDD B7				**Conducted Power(dBm)**		
Bandwidth	Modulation	RB size	RB offset	Channel 20775	Channel 21100	Channel 21425
5MHz	QPSK	1	0	21.75	21.56	21.71

This report shall not be reproduced except in full, without the written approval of UL Verification Services (Guangzhou) Co., Ltd, Song Shan Lake Branch

		1	12	21.97	21.79	**22.07**
		1	24	21.74	21.7	21.94
		12	0	20.9	20.68	20.89
		12	6	20.78	20.7	20.9
		12	13	20.84	20.78	21.02
		25	0	20.87	20.68	20.9
	16QAM	1	0	20.48	20.38	20.58
		1	12	20.56	20.42	20.66
		1	24	**20.92**	20.78	20.69
		12	0	19.72	19.68	19.88
		12	6	19.73	19.68	19.92
		12	13	19.73	19.77	19.87
		25	0	19.96	19.86	19.98
Bandwidth	Modulation	RB size	RB offset	Channel 20800	Channel 21100	Channel 21400
10MHz	QPSK	1	0	22.11	21.85	21.93
		1	24	22.24	21.96	**22.37**
		1	49	22.13	21.81	21.94
		25	0	21.12	20.82	20.99
		25	12	21.22	20.75	21.02
		25	25	21.17	20.84	21.1
		50	0	21.06	20.84	20.98
	16QAM	1	0	21.05	20.81	20.85
		1	24	**21.39**	21.31	21.19
		1	49	21.09	20.67	21.03
		25	0	20.16	19.8	19.89
		25	12	20.16	19.81	20
		25	25	20.14	19.8	20
		50	0	20.08	19.9	19.85
Bandwidth	Modulation	RB size	RB offset	Channel 20825	Channel 21100	Channel 21375
15MHz	QPSK	1	0	22.06	21.82	21.87
		1	38	**22.35**	21.8	21.87
		1	74	22.13	21.79	21.89
		36	0	21.14	20.8	20.98
		36	18	21.07	20.83	20.96
		36	37	21.17	20.84	20.97
		75	0	21.13	20.74	20.91
	16QAM	1	0	**21.22**	20.91	20.83
		1	38	21.13	20.76	20.91
		1	74	21.05	20.74	21.06
		36	0	20.12	19.88	19.93
		36	18	20.22	19.8	19.95
		36	37	20.12	19.81	19.76
		75	0	20.07	19.78	19.86

This report shall not be reproduced except in full, without the written approval of UL Verification Services (Guangzhou) Co., Ltd, Song Shan Lake Branch

Bandwidth	Modulation	RB size	RB offset	Channel 20850	Channel 21100	Channel 21350
20MHz	QPSK	1	0	21.87	21.66	21.81
		1	49	**22.56**	22.1	22.01
		1	99	21.99	21.98	21.86
		50	0	21.14	20.87	21.05
		50	25	21.12	20.8	21.06
		50	50	21.1	20.82	21.03
		100	0	21.05	20.8	20.99
	16QAM	1	0	21.31	21.21	21.16
		1	49	**21.83**	21.24	21.21
		1	99	21.19	20.91	21.22
		50	0	20.15	19.85	19.99
		50	25	20.04	19.96	20
		50	50	20.1	19.88	19.96
		100	0	20.07	19.78	19.96

LTE FDD B12				Conducted Power(dBm)		
Bandwidth	Modulation	RB size	RB offset	Channel 23017	Channel 23095	Channel 23173
1.4MHz	QPSK	1	0	22.9	23.12	22.67
		1	2	23.14	23.41	22.83
		1	5	23.23	23.41	22.83
		3	0	23.12	**23.49**	22.81
		3	1	23.32	23.48	22.93
		3	3	23.25	23.36	22.79
		6	0	22.27	22.29	21.75
	16QAM	1	0	21.92	22.6	21.9
		1	2	22.23	**22.97**	22.11
		1	5	22.6	22.66	21.81
		3	0	22.26	22.15	21.68
		3	1	22.05	22.24	21.69
		3	3	22.37	22.15	21.74
		6	0	21.3	21.35	20.7
Bandwidth	Modulation	RB size	RB offset	Channel 23025	Channel 23095	Channel 23165
3MHz	QPSK	1	0	23.01	23.34	22.98
		1	8	23.34	23.28	22.96
		1	14	23.32	**23.49**	22.83
		8	0	22.28	22.4	22.08
		8	4	22.2	22.42	21.97
		8	7	22.34	22.35	21.77
		15	0	22.29	22.35	21.72
	16QAM	1	0	22.01	22.21	22.15
		1	8	22.23	**22.33**	21.9

This report shall not be reproduced except in full, without the written approval of UL Verification Services (Guangzhou) Co., Ltd, Song Shan Lake Branch

		1	14	22.17	22.11	21.89
		8	0	21.38	21.54	21.09
		8	4	21.39	21.42	20.98
		8	7	21.29	21.35	20.72
		15	0	21.39	21.16	20.74
Bandwidth	Modulation	RB size	RB offset	Channel 23035	Channel 23095	Channel 23155
5MHz	QPSK	1	0	23.1	23.26	23.01
		1	12	23.25	**23.37**	23.04
		1	24	23.36	23.17	22.84
		12	0	22.26	22.39	22.05
		12	6	22.19	22.4	21.93
		12	13	22.37	22.25	21.58
		25	0	22.32	22.2	21.79
	16QAM	1	0	21.79	22.31	22.05
		1	12	22.37	22.33	21.88
		1	24	**22.48**	22.03	21.86
		12	0	21.18	21.35	20.86
		12	6	21.12	21.34	20.88
		12	13	21.38	21.23	20.67
		25	0	21.46	21.29	20.96
Bandwidth	Modulation	RB size	RB offset	Channel 23060	Channel 23095	Channel 23130
10MHz	QPSK	1	0	22.96	23.16	23.35
		1	24	**23.62**	23.51	23.58
		1	49	23.31	23.12	22.75
		25	0	22.29	22.41	22.29
		25	12	22.41	22.39	22.27
		25	25	22.44	22.26	21.86
		50	0	22.28	22.2	22.12
	16QAM	1	0	22.11	22.21	22.76
		1	24	23.07	22.26	**23.15**
		1	49	22.36	22.01	22.1
		25	0	21.21	21.5	21.15
		25	12	21.22	21.4	21.14
		25	25	21.42	21.3	20.85
		50	0	21.37	21.23	21.11

LTE FDD B13				**Conducted Power(dBm)**		
Bandwidth	Modulation	RB size	RB offset	Channel 23205	Channel 23230	Channel 23255
5MHz	QPSK	1	0	22.18	23.15	23.34
		1	12	23.14	23.31	**23.51**
		1	24	23.02	23.35	23.5
		12	0	22.34	22.22	22.18

This report shall not be reproduced except in full, without the written approval of UL Verification Services (Guangzhou) Co., Ltd, Song Shan Lake Branch

		12	6	22.21	22.18	22.41
		12	13	22.14	22.6	22.49
		25	0	22.22	22.28	22.36
	16QAM	1	0	22.29	21.85	22.28
		1	12	21.99	22.09	22.37
		1	24	22.42	21.96	**22.65**
		12	0	21.23	21.17	21.15
		12	6	21.32	21.26	21.08
		12	13	21.22	21.17	21.2
		25	0	21.11	21.28	21.1
Bandwidth	Modulation	RB size	RB offset	Channel 23230		
10MHz	QPSK	1	0	23.22		
		1	24	23.16		
		1	49	**23.57**		
		25	0	22.4		
		25	12	22.18		
		25	25	22.43		
		50	0	22.35		
	16QAM	1	0	22.1		
		1	24	**22.41**		
		1	49	22.02		
		25	0	21.07		
		25	12	21.17		
		25	25	21.37		
		50	0	21.22		

LTE FDD B25				**Conducted Power(dBm)**		
Bandwidth	Modulation	RB size	RB offset	Channel 26047	Channel 26365	Channel 26683
1.4MHz	QPSK	1	0	22.24	22.31	22.19
		1	2	22.3	22.32	21.33
		1	5	22.16	22.28	20.76
		3	0	22.15	**22.35**	21.51
		3	1	22.16	22.26	21.49
		3	3	22.17	22.25	20.84
		6	0	21.23	21.35	21.15
	16QAM	1	0	21.45	21.71	21.13
		1	2	21.68	**21.92**	20.56
		1	5	21.39	21.63	20
		3	0	21.06	21.27	20.64
		3	1	21.05	21.26	20.59
		3	3	21.12	21.18	19.93
		6	0	20.27	20.51	20.24
Bandwidth	Modulation			Channel	Channel	Channel

This report shall not be reproduced except in full, without the written approval of UL Verification Services (Guangzhou) Co., Ltd, Song Shan Lake Branch

		RB size	RB offset	26055	26365	26675
3MHz	QPSK	1	0	22.26	22.17	22.17
		1	8	22.25	22.36	22.04
		1	14	**22.41**	22.39	20.71
		8	0	21.27	21.44	21.64
		8	4	21.2	21.45	21.46
		8	7	21.32	21.36	21.27
		15	0	21.33	21.33	21.35
	16QAM	1	0	21.16	21.26	21.28
		1	8	21.6	**21.71**	21.26
		1	14	21.16	21.35	19.93
		8	0	20.32	20.4	20.68
		8	4	20.33	20.4	20.57
		8	7	20.47	20.33	20.39
		15	0	20.33	20.44	20.41
Bandwidth	Modulation	RB size	RB offset	Channel 26065	Channel 26365	Channel 26665
5MHz	QPSK	1	0	22.14	22.19	22.12
		1	12	22.39	**22.46**	22.24
		1	24	22.22	22.25	20.95
		12	0	21.19	21.3	21.4
		12	6	21.21	21.41	21.3
		12	13	21.29	21.38	21.31
		25	0	21.25	21.32	21.17
	16QAM	1	0	20.92	20.98	**21.57**
		1	12	21	20.92	21.5
		1	24	20.95	21.09	20.22
		12	0	20.3	20.41	20.3
		12	6	20.31	20.33	20.3
		12	13	20.2	20.32	20.45
		25	0	20.37	20.5	20.12
Bandwidth	Modulation	RB size	RB offset	Channel 26090	Channel 26365	Channel 26640
10MHz	QPSK	1	0	22.12	22.34	22.1
		1	24	**22.54**	22.51	22.07
		1	49	22.27	22.45	20.6
		25	0	21.25	21.5	21.4
		25	12	21.28	21.42	21.36
		25	25	21.41	21.39	21.26
		50	0	21.27	21.37	21.25
	16QAM	1	0	21.28	21.39	21.52
		1	24	**21.89**	21.6	21.29
		1	49	21.71	21.63	19.75
		25	0	20.25	20.42	20.59

This report shall not be reproduced except in full, without the written approval of UL Verification Services (Guangzhou) Co., Ltd, Song Shan Lake Branch

		25	12	20.46	20.43	20.41
		25	25	20.31	20.5	20.58
		50	0	20.43	20.56	20.21
Bandwidth	Modulation	RB size	RB offset	Channel 26115	Channel 26365	Channel 26615
15MHz	QPSK	1	0	22.22	22.25	22.19
		1	38	22.25	22.41	22.03
		1	74	22.44	**22.56**	20.59
		36	0	21.31	21.5	21.49
		36	18	21.34	21.42	21.53
		36	37	21.34	21.4	21.44
		75	0	21.33	21.4	21.34
	16QAM	1	0	21.44	21.47	21.31
		1	38	**22.01**	21.49	21.28
		1	74	21.35	21.66	19.96
		36	0	20.31	20.36	20.4
		36	18	20.23	20.5	20.45
		36	37	20.23	20.31	20.42
		75	0	20.3	20.55	20.43
Bandwidth	Modulation	RB size	RB offset	Channel 26140	Channel 26365	Channel 26590
20MHz	QPSK	1	0	22.17	22.37	22.5
		1	49	22.63	**22.64**	22.28
		1	99	22.56	22.4	20.57
		50	0	21.4	21.52	21.54
		50	25	21.35	21.53	21.52
		50	50	21.46	21.5	21.31
		100	0	21.43	21.45	21.37
	16QAM	1	0	21.62	**22.01**	21.41
		1	49	21.9	21.92	21.29
		1	99	21.44	21.83	19.75
		50	0	20.61	20.46	20.56
		50	25	20.43	20.46	20.52
		50	50	20.41	20.53	20.37
		100	0	20.44	20.5	20.43

LTE FDD B26(814-824)				**Conducted Power(dBm)**		
Bandwidth	Modulation	RB size	RB offset	Channel 26697	Channel 26740	Channel 26783
1.4MHz	QPSK	1	0	22.9	22.65	22.84
		1	2	22.86	**23.18**	22.85
		1	5	22.68	22.8	22.86
		3	0	22.7	22.91	22.79
		3	1	22.73	23.05	22.78
		3	3	22.59	23	22.86

This report shall not be reproduced except in full, without the written approval of UL Verification Services (Guangzhou) Co., Ltd, Song Shan Lake Branch

		6	0	21.9	21.87	21.96
	16QAM	1	0	22.18	21.97	22.17
		1	2	**22.33**	21.96	22.17
		1	5	21.78	21.88	22.01
		3	0	21.57	21.82	21.67
		3	1	21.71	21.86	21.65
		3	3	21.63	21.8	21.64
		6	0	20.94	20.97	21.14
Bandwidth	Modulation	RB size	RB offset	Channel 26705	Channel 26740	Channel 26775
3MHz	QPSK	1	0	23.06	22.83	22.85
		1	8	22.93	23.05	22.94
		1	14	22.89	**23.17**	22.77
		8	0	22.01	22.04	22.02
		8	4	22.05	22.05	22.02
		8	7	21.93	22.05	22.08
		15	0	21.96	22.07	22.04
	16QAM	1	0	22.01	**22.39**	21.99
		1	8	21.87	22.24	21.91
		1	14	21.87	22.16	22.03
		8	0	21.32	20.92	21.07
		8	4	21.2	21.28	21.13
		8	7	20.99	21.09	21.04
		15	0	20.87	20.97	20.92
Bandwidth	Modulation	RB size	RB offset	Channel 26715	Channel 26740	Channel 26765
5MHz	QPSK	1	0	23.12	22.8	22.76
		1	12	22.95	**23.22**	23.01
		1	24	23.08	23.03	22.78
		12	0	21.96	22.05	21.87
		12	6	21.9	22.07	21.86
		12	13	22.16	22.01	22.04
		25	0	21.98	21.87	21.99
	16QAM	1	0	21.78	21.99	21.57
		1	12	22.03	21.98	21.68
		1	24	21.59	**22.23**	21.61
		12	0	21.02	21.13	21.06
		12	6	20.9	21.14	20.75
		12	13	20.97	20.99	21.07
		25	0	21.12	20.93	20.99
Bandwidth	Modulation	RB size	RB offset	Channel 26740		
10MHz	QPSK	1	0	22.94		
		1	24	**23.1**		
		1	49	**23.1**		

This report shall not be reproduced except in full, without the written approval of UL Verification Services (Guangzhou) Co., Ltd, Song Shan Lake Branch

		25	0	21.97
		25	12	21.98
		25	25	22.15
		50	0	21.95
	16QAM	1	0	21.99
		1	24	**22.7**
		1	49	21.98
		25	0	20.96
		25	12	21.06
		25	25	21.03
		50	0	21.02

LTE FDD B26(824-849)				**Conducted Power(dBm)**		
Bandwidth	Modulation	RB size	RB offset	Channel 26797	Channel 26915	Channel 27033
1.4MHz	QPSK	1	0	22.81	22.88	22.73
		1	2	22.91	22.85	**23.09**
		1	5	22.68	22.95	23.01
		3	0	**23.09**	22.8	22.66
		3	1	23.01	22.82	22.8
		3	3	22.76	22.75	22.88
		6	0	21.99	21.84	21.79
	16QAM	1	0	22.15	22.06	21.91
		1	2	22.14	22.07	**22.29**
		1	5	22.13	22.28	22.14
		3	0	21.96	21.62	21.67
		3	1	21.94	21.72	21.52
		3	3	21.56	21.73	21.52
		6	0	21.11	20.89	20.62
Bandwidth	Modulation	RB size	RB offset	Channel 26805	Channel 26915	Channel 27025
3MHz	QPSK	1	0	22.81	22.69	22.76
		1	8	22.84	22.87	22.7
		1	14	22.83	22.7	**22.98**
		8	0	21.99	21.95	21.78
		8	4	22.09	21.89	21.72
		8	7	21.88	21.9	21.7
		15	0	22.01	21.86	21.72
	16QAM	1	0	21.78	21.56	21.59
		1	8	21.7	22.03	21.65
		1	14	**22.14**	21.98	21.61
		8	0	21.09	20.75	20.81
		8	4	21.26	20.99	20.89
		8	7	20.93	21.01	20.9
		15	0	21.02	20.87	20.81

This report shall not be reproduced except in full, without the written approval of UL Verification Services (Guangzhou) Co., Ltd, Song Shan Lake Branch

Bandwidth	Modulation	RB size	RB offset	Channel 26815	Channel 26915	Channel 27015
5MHz	QPSK	1	0	22.74	22.76	22.32
		1	12	22.55	22.69	22.51
		1	24	22.76	**22.77**	22.51
		12	0	21.64	21.57	21.56
		12	6	21.73	21.58	21.61
		12	13	21.71	21.53	21.41
		25	0	21.64	21.58	21.49
	16QAM	1	0	21.34	21.51	20.88
		1	12	21.27	21.55	20.99
		1	24	**21.74**	21.43	21.65
		12	0	20.61	20.74	20.48
		12	6	20.83	20.51	20.6
		12	13	20.71	20.59	20.57
		25	0	20.74	20.53	20.5
Bandwidth	Modulation	RB size	RB offset	Channel 26840	Channel 26915	Channel 26990
10MHz	QPSK	1	0	22.41	22.47	22.33
		1	24	22.72	**22.81**	22.61
		1	49	22.59	22.47	22.39
		25	0	21.68	21.53	21.49
		25	12	21.57	21.53	21.54
		25	25	21.58	21.51	21.35
		50	0	21.62	21.44	21.39
	16QAM	1	0	21.57	21.54	21.47
		1	24	**22.17**	21.41	21.47
		1	49	21.53	21.35	21.28
		25	0	20.53	20.63	20.51
		25	12	20.52	20.72	20.52
		25	25	20.57	20.44	20.39
		50	0	20.59	20.54	20.44
Bandwidth	Modulation	RB size	RB offset	Channel 26865	Channel 26915	Channel 26965
15MHz	QPSK	1	0	22.33	22.41	22.6
		1	38	22.6	22.61	**22.75**
		1	74	22.49	22.24	22.54
		36	0	21.55	21.48	21.64
		36	18	21.61	21.52	21.53
		36	37	21.56	21.47	21.37
		75	0	21.56	21.52	21.46
	16QAM	1	0	22.07	21.64	21.81
		1	38	21.99	21.31	**22.37**
		1	74	21.93	21.25	21.51
		36	0	20.74	20.45	20.55

This report shall not be reproduced except in full, without the written approval of UL Verification Services (Guangzhou) Co., Ltd, Song Shan Lake Branch

		36	18	20.75	20.49	20.45
		36	37	20.58	20.46	20.37
		75	0	20.65	20.62	20.52

LTE FDD B38				Conducted Power(dBm)		
Bandwidth	Modulation	RB size	RB offset	Channel 37775	Channel 38000	Channel 38225
5MHz	QPSK	1	0	21.51	21.32	21.66
		1	12	21.47	21.44	**21.81**
		1	24	21.37	21.43	21.76
		12	0	20.59	20.71	20.86
		12	6	20.53	20.63	20.87
		12	13	20.53	20.63	20.83
		25	0	20.53	20.7	20.72
	16QAM	1	0	20.88	21.09	20.82
		1	12	20.94	**21.16**	20.92
		1	24	20.66	21.04	20.74
		12	0	19.52	19.54	19.69
		12	6	19.53	19.59	19.69
		12	13	19.35	19.5	19.75
		25	0	19.48	19.61	19.88
Bandwidth	Modulation	RB size	RB offset	Channel 37800	Channel 38000	Channel 38200
10MHz	QPSK	1	0	21.39	21.5	21.7
		1	24	21.44	21.75	**21.95**
		1	49	21.54	21.62	21.94
		25	0	20.58	20.57	20.81
		25	12	20.48	20.69	20.74
		25	25	20.56	20.72	20.76
		50	0	20.46	20.67	20.81
	16QAM	1	0	20.78	20.12	21.28
		1	24	20.63	20.53	21.45
		1	49	20.75	20.35	**21.52**
		25	0	19.52	19.72	19.69
		25	12	19.48	19.82	19.7
		25	25	19.53	19.88	19.92
		50	0	19.49	19.5	19.83
Bandwidth	Modulation	RB size	RB offset	Channel 37825	Channel 38000	Channel 38175
15MHz	QPSK	1	0	21.33	21.65	21.72
		1	38	21.51	21.65	21.9
		1	74	21.61	21.69	**21.97**

This report shall not be reproduced except in full, without the written approval of UL Verification Services (Guangzhou) Co., Ltd, Song Shan Lake Branch

		36	0	20.46	20.57	20.68
		36	18	20.57	20.57	20.68
		36	37	20.57	20.57	20.69
		75	0	20.52	20.6	20.76
	16QAM	1	0	20.78	20.71	20.89
		1	38	20.71	20.52	20.89
		1	74	20.82	20.56	**20.98**
		36	0	19.43	19.59	19.82
		36	18	19.43	19.58	19.73
		36	37	19.46	19.41	19.67
		75	0	19.79	19.65	19.8
Bandwidth	Modulation	RB size	RB offset	Channel 37850	Channel 38000	Channel 38150
20MHz	QPSK	1	0	21.42	21.81	21.63
		1	49	21.47	**21.99**	21.73
		1	99	21.5	21.98	21.79
		50	0	20.51	20.6	20.72
		50	25	20.51	20.61	20.82
		50	50	20.63	20.74	20.76
		100	0	20.61	20.57	20.7
	16QAM	1	0	21.02	20.68	20.6
		1	49	**21.43**	20.87	20.79
		1	99	21.08	20.69	20.58
		50	0	19.62	19.58	19.73
		50	25	19.63	19.67	19.83
		50	50	19.78	19.62	19.78
		100	0	19.7	19.62	19.67

LTE FDD B41				**Conducted Power(dBm)**		
Bandwidth	Modulation	RB size	RB offset	Channel 39675	Channel 40620	Channel 41565
5MHz	QPSK	1	0	21.72	21.59	22.15
		1	12	21.68	21.69	**22.21**
		1	24	21.69	21.62	22.15
		12	0	20.87	20.8	21.46
		12	6	20.88	20.8	21.38
		12	13	20.87	20.9	21.32
		25	0	20.83	20.77	21.36
	16QAM	1	0	20.7	20.69	**21.56**
		1	12	20.87	20.9	21.4
		1	24	20.75	20.73	21.43
		12	0	19.9	19.74	20.43
		12	6	19.9	19.84	20.7
		12	13	19.79	19.92	20.42
		25	0	19.87	19.91	20.54

This report shall not be reproduced except in full, without the written approval of UL Verification Services (Guangzhou) Co., Ltd, Song Shan Lake Branch

Bandwidth	Modulation	RB size	RB offset	Channel 39700	Channel 40620	Channel 41540
10MHz	QPSK	1	0	21.72	21.64	22.25
		1	24	21.7	21.73	**22.42**
		1	49	22.04	21.69	22.2
		25	0	20.89	20.9	21.48
		25	12	20.93	20.8	21.43
		25	25	21.09	20.88	21.44
		50	0	20.97	20.88	21.43
	16QAM	1	0	20.81	20.76	21.59
		1	24	21.05	21.14	**21.87**
		1	49	21.06	21.1	21.64
		25	0	19.92	19.81	20.58
		25	12	19.92	19.74	20.58
		25	25	20.1	20	20.73
		50	0	19.88	20.03	20.43
Bandwidth	Modulation	RB size	RB offset	Channel 39725	Channel 40620	Channel 41515
15MHz	QPSK	1	0	21.48	21.56	**22.44**
		1	38	21.7	21.65	22.32
		1	74	21.75	21.61	22.22
		36	0	20.74	20.81	21.57
		36	18	20.74	20.82	21.5
		36	37	20.74	20.82	21.5
		75	0	20.83	20.85	21.43
	16QAM	1	0	20.87	20.99	**21.42**
		1	38	20.81	20.98	21.4
		1	74	20.93	21.02	21.25
		36	0	19.78	19.79	20.55
		36	18	19.78	19.88	20.55
		36	37	19.8	19.88	20.55
		75	0	19.88	20.03	20.56
Bandwidth	Modulation	RB size	RB offset	Channel 39750	Channel 40620	Channel 41490
20MHz	QPSK	1	0	21.52	21.34	22.65
		1	49	21.78	21.67	**22.84**
		1	99	21.76	21.83	22.47
		50	0	20.8	20.86	21.59
		50	25	20.8	20.81	21.53
		50	50	21	20.92	21.46
		100	0	20.86	20.86	21.49
	16QAM	1	0	21.23	21.29	21.59
		1	49	21.73	**21.79**	21.75
		1	99	21.36	21.44	21.4
		50	0	19.95	19.93	20.72

This report shall not be reproduced except in full, without the written approval of UL Verification Services (Guangzhou) Co., Ltd, Song Shan Lake Branch

		50	25	19.85	19.93	20.63
		50	50	20.14	19.99	20.67
		100	0	20	19.99	20.67

This report shall not be reproduced except in full, without the written approval of UL Verification Services (Guangzhou) Co., Ltd, Song Shan Lake Branch

7.2. PEAK TO AVERAGE RADIO

LIMITS

In addition, when the transmitter power is measured in terms of average value, the peak-to-average ratio of the power shall not exceed 13 dB.

TEST PROCEDURE

Refer to KDB 971168 D01 Power Meas License Digital Systems v03r01;

The transmitter output was connected to a CMW500 Test Set and configured to operate at maximum power. The PAR was measured on the Spectrum Analyzer.

TEST SETUP

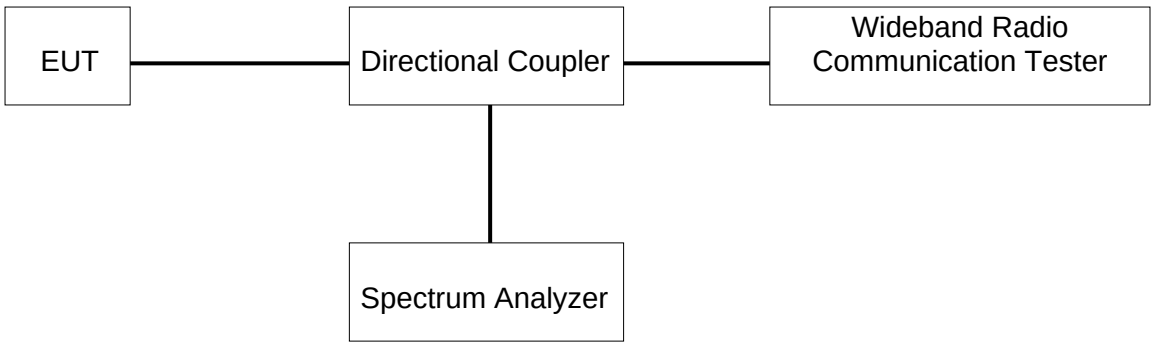

TEST ENVIRONMENT

Temperature	23.1°C	Relative Humidity	59.4%
Atmosphere Pressure	101kPa	Test Voltage	DC 5.8 V

RESULTS

Refer to Appendix B.

This report shall not be reproduced except in full, without the written approval of UL Verification Services (Guangzhou) Co., Ltd, Song Shan Lake Branch

7.3. OCCUPIED BANDWIDTH

RULE PART(S)

FCC: §2.1049, RSS-130, RSS-132, RSS-133, RSS-139, RSS-195, RSS-199

LIMITS

For reporting purposes only.

TEST PROCEDURE

The transmitter output was connected to a calibrated coaxial cable and coupler, the other end of which was connected to a spectrum analyzer. The occupied bandwidth was measured with the spectrum analyzer at the low, middle and high channel in each band. The -26dB bandwidth was also measured and recorded.

(Refer to KDB 971168 D01 Power Meas License Digital Systems v03r01)

TEST SETUP

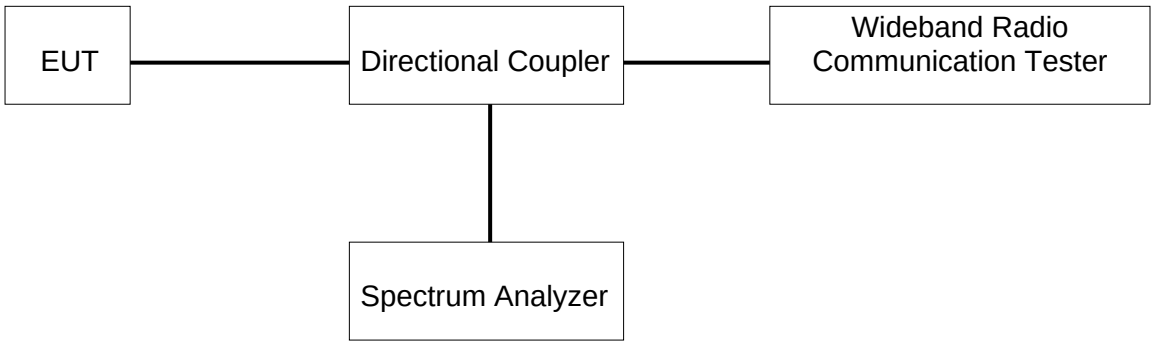

TEST ENVIRONMENT

Temperature	23.1°C	Relative Humidity	59.4%
Atmosphere Pressure	101kPa	Test Voltage	DC 5.8 V

RESULTS

Refer to Appendix C.

This report shall not be reproduced except in full, without the written approval of UL Verification Services (Guangzhou) Co., Ltd, Song Shan Lake Branch

7.4. BAND EDGE EMISSIONS

RULE PART(S)

FCC §2.1051, §22.917, §24.238, §27.53, §90,
RSS-130, RSS-132, RSS-133, RSS-139, RSS-195, RSS-199

LIMITS

The power of any emission outside of the authorized operating frequency ranges must be attenuated below the transmitting power (P) by a factor of at least 43 + 10 log (P) dB.

TEST PROCEDURE

Refer to KDB 971168 D01 Power Meas License Digital Systems v03r01
The transmitter output was connected to a CMW500 Test Set and configured to operate at maximum power. The band edge emissions were measured at the required operating frequencies in each band on the Spectrum Analyzer.

a) Set the RBW = 1 ~ 1.5 % of OBW (Typically limited to a minimum RBW of 1% of the OBW)
b) Set VBW ≥ 3 × RBW;
c) Set span ≥ 1.5 times the OBW;
d) Sweep time = Auto;
e) Detector = RMS;
f) Ensure that the number of measurement points ≥ 2*Span/RBW;
g) Trace mode = Average (100);

Test procedure for LTE Band 41

Measurement procedure. Compliance with these rules is based on the use of measurement instrumentation employing a resolution bandwidth of 1 megahertz or greater. However, in the 1 MHz bands immediately outside and adjacent to the frequency block a resolution bandwidth of at least one percent of the emission bandwidth of the fundamental emission of the transmitter may be employed; for mobile digital stations, in the 1 megahertz bands immediately outside and adjacent to the frequency block a resolution bandwidth of at least two percent may be employed, except when the 1 megahertz band is 2495-2496 MHz, in which case a resolution bandwidth of at least one percent may be employed. A narrower resolution bandwidth is permitted in all cases to improve measurement accuracy provided the measured power is integrated over the full required measurement bandwidth (i.e. 1 megahertz or 1 percent of emission bandwidth, as specified; or 1 megahertz or 2 percent for mobile digital stations, except in the band 2495-2496 MHz). The emission bandwidth is defined as the width of the signal between two points, one below the carrier center frequency and one above the carrier center frequency, outside of which all emissions are attenuated at least 26 dB below the transmitter power. With respect to television operations, measurements must be made of the separate visual and aural operating powers at sufficiently frequent intervals to ensure compliance with the rules.

This report shall not be reproduced except in full, without the written approval of UL Verification Services (Guangzhou) Co., Ltd, Song Shan Lake Branch

TEST SETUP

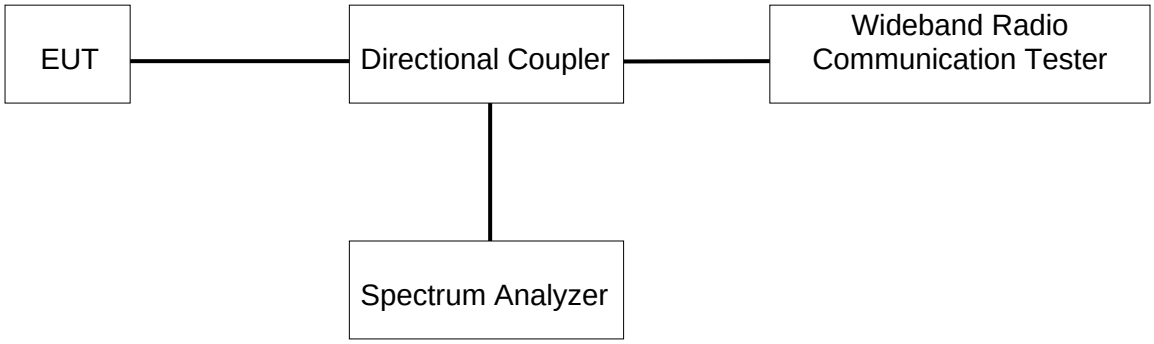

TEST ENVIRONMENT

Temperature	23.1°C	Relative Humidity	59.4%
Atmosphere Pressure	101kPa	Test Voltage	DC 5.8 V

RESULTS

Refer to Appendix D.

This report shall not be reproduced except in full, without the written approval of UL Verification Services (Guangzhou) Co., Ltd, Song Shan Lake Branch

7.5. SPURIOUS EMISSION AT ANTENNA TERMINAL

RULE PART(S)

FCC: §2.1051, §22.901, §22.917, §24.238, §27.53, §90,
RSS-130, RSS-132, RSS-133, RSS-139, RSS-195, RSS-199

LIMITS

FCC: §22.901, §22.917, §24.238
The power of any emission outside of the authorized operating frequency ranges must be attenuated below the transmitting power (P) by a factor of at least 43 + 10 log (P) dB.

FCC: §27.53(m)(Band 41)
The power of any emission outside of the authorized operating frequency ranges must be attenuated below the transmitting power (P) by a factor of at least 55 + 10 log (P) dB.

TEST PROCEDURE

Per KDB 971168 D01 Power Meas License Digital Systems v03r01
The RF output of the transmitter was connected to a spectrum analyzer through a calibrated coaxial cable. Sufficient scans were taken to show the out-of-band Emissions, if any, up to 10th harmonic. Multiple sweeps were recorded in maximum hold mode using a peak detector to ensure that the worst-case emissions were caught.

a) Set the RBW = 100 kHz for emission below 1GHz and 1MHz for emissions above 1GHz (Tests were performed 1 MHz [Worst case], to sweep 1 time for all frequency range)
b) Set VBW ≥ 3 × RBW;
c) Set span ≥ 1.5 times the OBW;
d) Sweep time = auto couple;
e) Detector = rms;
f) Ensure that the number of measurement points = Max (40001);
g) Trace mode = average (LTE 5), Maxhold (LTE Band7);

Note: Please refer to section 5.4 for bandwidth and RB setting about LTE bands.

TEST SETUP

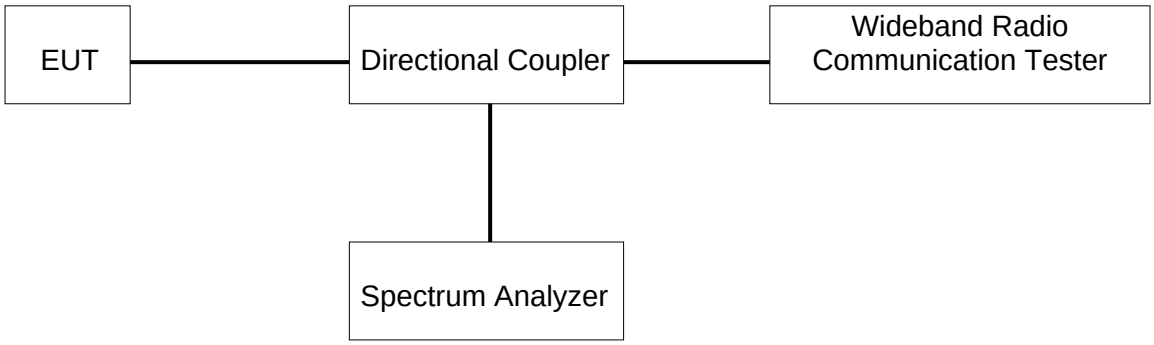

This report shall not be reproduced except in full, without the written approval of UL Verification Services (Guangzhou) Co., Ltd, Song Shan Lake Branch

TEST ENVIRONMENT

Temperature	23.1°C	Relative Humidity	59.4%
Atmosphere Pressure	101kPa	Test Voltage	DC 5.8 V

RESULTS

Refer to Appendix E.

This report shall not be reproduced except in full, without the written approval of UL Verification Services (Guangzhou) Co., Ltd, Song Shan Lake Branch

7.6. FREQUENCY STABILITY

Rule Part:
FCC: §2.1055, §22.355, §24.235, §27.54, §90,
RSS-130, RSS-132, RSS-133, RSS-139, RSS-195, RSS-199

LIMITS

§22.355 - The carrier frequency shall not depart from the reference frequency in excess of ±2.5 ppm for mobile stations.

§24.235 and §27.54 - The frequency stability shall be sufficient to ensure that the fundamental emissions stay within the authorized bands of operation.

TEST PROCEDURE

Refer to KDB 971168 D01 Power Meas License Digital Systems v03r01.

	F	Extreme Test Conditions
Relative Humidity	45 % - 75 %	/
Atmospheric Pressure	100 kPa ~102 kPa	/
Temperature	T_N (Normal Temperature): 24.5 °C	T_L (Low Temperature): -30 °C
		T_H (High Temperature): 50 °C
Supply Voltage	V_N (Normal Voltage): DC 5.8 V	V_L (Low Voltage): DC 4.93V
		V_H (High Voltage): DC 6.67 V

TEST SETUP

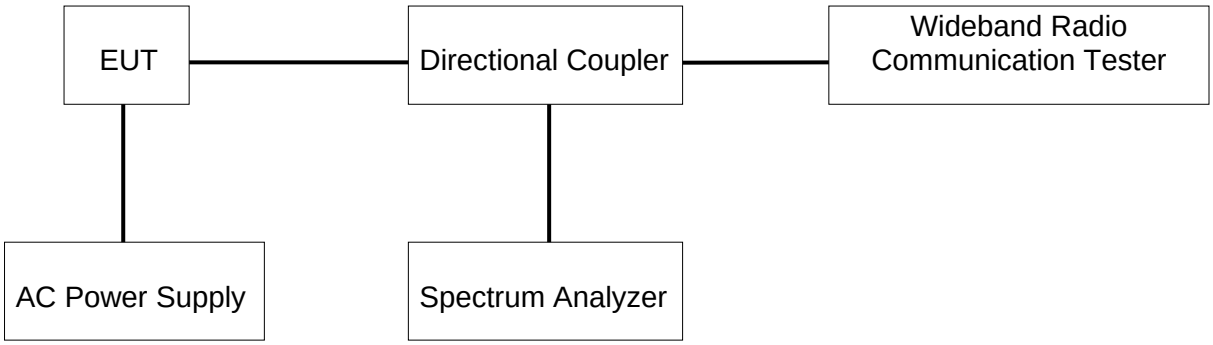

RESULTS

Refer to Appendix F.

This report shall not be reproduced except in full, without the written approval of UL Verification Services (Guangzhou) Co., Ltd, Song Shan Lake Branch

8. RADIATED SPURIOUS EMISSIONS

RULE PART(S)

FCC: §2.1053, §22.917, §24.238, §27.53, §90,
RSS-130, RSS-132, RSS-133, RSS-139, RSS-195, RSS-199

LIMIT

Part §22.917(a), §24.238(a), §27.53(h)
The power of any emission outside of the authorized operating frequency ranges must be attenuated below the transmitting power (P) by a factor of at least 43 + 10 log (P) dB.

RSS-132 section 5.5
Mobile and base station equipment shall comply with the limits in (i) and (ii) below.
(i) In the first 1.0 MHz band immediately outside and adjacent to each of the sub-bands specified in Section 5.1, the power of emissions per any 1% of the occupied bandwidth shall be attenuated (in dB) below the transmitter output power P (dBW) by at least 43 + 10 log10 p (watts).
(ii) After the first 1.0 MHz immediately outside and adjacent to each of the sub-bands, the power of emissions in any 100 kHz bandwidth shall be attenuated (in dB) below the transmitter output power P (dBW) by at least 43 + 10 log10 p (watts). If the measurement is performed using 1% of the occupied bandwidth, power integration over 100 kHz is required.

RSS-133 section 6.5.1
Equipment shall comply with the limits in (i) and (ii) below.
(i) In the 1.0 MHz bands immediately outside and adjacent to the equipment's operating frequency block, the emission power per any 1% of the emission bandwidth shall be attenuated (in dB) below the transmitter output power P (dBW) by at least 43 + 10 log10 p(watts).
(ii) After the first 1.0 MHz, the emission power in any 1 MHz bandwidth shall be attenuated (in dB) below the transmitter output power P (dBW) by at least 43 + 10 log10 p(watts). If the measurement is performed using 1% of the emission bandwidth, power integration over 1.0 MHz is required.

RSS-139 section 6.6
(i) In the first 1.0 MHz bands immediately outside and adjacent to the equipment's smallest operating frequency block,2 which can contain the equipment's occupied bandwidth, the emission power per any 1% of the emission bandwidth shall be attenuated below the transmitter output power P (in dBW) by at least 43 + 10 log10 p (watts) dB.
(ii) After the first 1.0 MHz outside the equipment's smallest operating frequency block, which can contain the equipment's occupied bandwidth, the emission power in any 1 MHz bandwidth shall be attenuated below the transmitter output power P (in dBW) by at least 43 + 10 log10 p (watts) dB.

For Band 13, 1559-1610 MHz shall be limited to -70 dBW/MHz EIRP for wideband signals and -80 dBW EIRP for discrete emissions of less than 700 Hz bandwidth.

This report shall not be reproduced except in full, without the written approval of UL Verification Services (Guangzhou) Co., Ltd, Song Shan Lake Branch

TEST PROCEDURE

According to the C 63.26-2015 section 5.5.2.2.3

Below 1GHz test procedure as below:

For radiated emissions measurements performed at frequencies less than or equal to 1 GHz, the EUT shall be placed on a RF-transparent table or support at a nominal height of 80 cm above the reference ground plane. Radiated measurements shall be made with the measurement antenna positioned in both horizontal and vertical polarization. The measurement antenna shall be varied from 1 m to 4 m in height above the reference ground in a search for the relative positioning that produces the maximum radiated signal level (i.e., field strength or received power). When orienting the measurement antenna in vertical polarization, the minimum height of the lowest element of the antenna shall clear the site reference ground plane by at least 25 cm.

Above 1GHz test procedure as below:
For radiated measurements performed at frequencies above 1 GHz, the EUT shall be placed on an RF transparent table or support at a nominal height of 1.5 m above the ground plane. Radiated measurements shall be made with the measurement antenna positioned in both horizontal and vertical polarization. The height scan of the measurement antenna shall be varied from 1 m to 4 m in a search for the relative positioning that produces the maximum radiated signal level (i.e., field strength or received power). When using the direct field strength method and the EUT is manipulated through three different orientations, then the scan height range of the measurement antenna is limited to 2.5 m, or 0.5 m above the top of the EUT, whichever is higher.

Radiated Power Measurement Calculation According to ANSI C63.26-2015

a) E (dBμV/m) = Measured amplitude level (dBμV) + Cable Loss (dB) + Antenna Factor (dB/m).
b) E (dBμV/m) = Measured amplitude level (dBm) + 107 + Cable Loss (dB) + Antenna Factor (dB/m).
c) E (dBμV/m) = EIRP (dBm) − 20log(D) + 104.8; where D is the measurement distance (in the far field region) in m.
d) EIRP (dBm) = E (dBμV/m) + 20log(D) − 104.8; where D is the measurement distance (in the far field region) in m.
So, from d)
The measuring distance is usually at 3m, then 20*Log(3)=9.5424
Then, EIRP (dBm) = E (dBμV/m) + 9.5424 − 104.8 = E (dBμV/m) – 95.2576

The limit line is derived from 43 + 10log(P)dB below the transmitter power P(Watts)
= P(W)- [43 + 10log(P)] (dB)
= [30 + 10log(P)] (dBm) - [43 + 10log(P)] (dB)
= -13dBm.

EIRP[dBm] =E[dBμV/m] − 95.2
E[dBμV/m]= 95.2+ EIRP[dBm]
E[dBμV/m]= 82.20

NOTE 1: Radiated spurious emissions were investigated below 30 MHz, 30 MHz – 1 GHz and above 1 GHz. There were no emissions found on below 30 MHz and 30 MHz – 1 GHz. Although these tests were performed other than open area test site, adequate comparison measurements were confirmed against 30 m open are test site.
Therefore sufficient tests were made to demonstrate that the alternative site produces results that correlate with the one of tests made in an open field based on KDB 414788.

NOTE 2: Please refer to section 5 for bandwidth and RB setting about LTE bands.
NOTE 3: All the test modes have been tested, only the worst data record in the report.

This report shall not be reproduced except in full, without the written approval of UL Verification Services (Guangzhou) Co., Ltd, Song Shan Lake Branch

Note 4: For all radiated test, EUT in each of three orthogonal axis emissions had been tested, but only the worst case (X axis) data recorded in the report.
X axis, Y axis, Z axis positions:

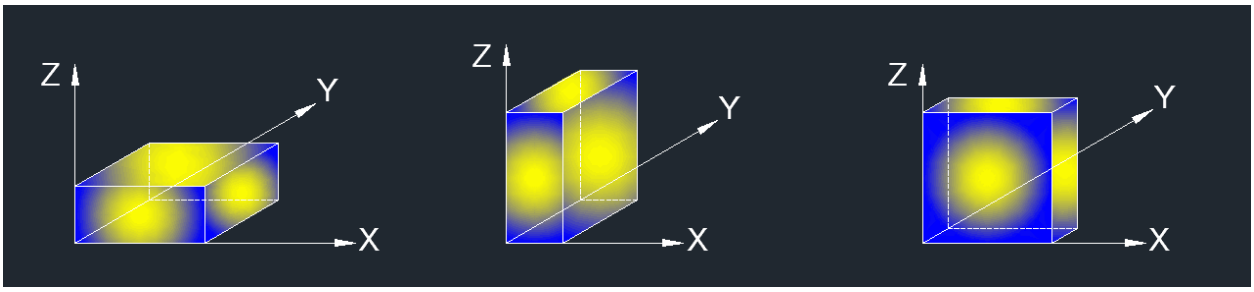

TEST SETUP

Test Setup for Below 1 GHz

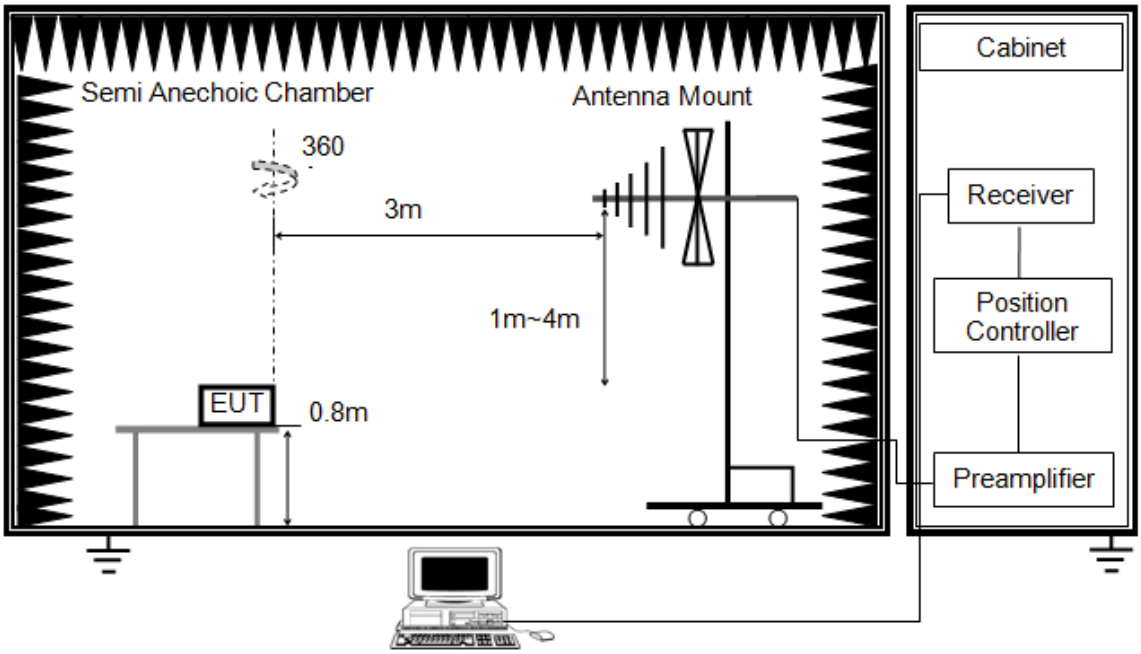

Test Setup for Above 1 GHz

This report shall not be reproduced except in full, without the written approval of UL Verification Services (Guangzhou) Co., Ltd, Song Shan Lake Branch

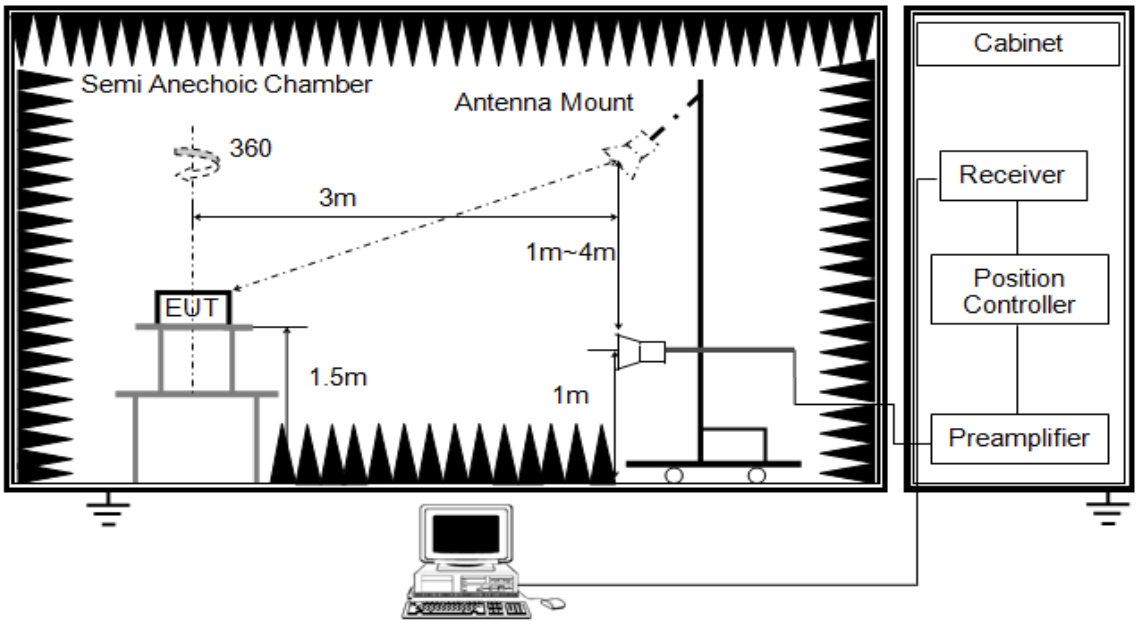

TEST ENVIRONMENT

Temperature	24.3°C	Relative Humidity	61%
Atmosphere Pressure	101kPa	Test Voltage	DC 5.8 V

RESULTS

LTE Band 2

QPSK-20 MHz-Low Channel- Horizontal(worst case)

Frequency (MHz)	Reading (dBuV)	Correct (dB/m)	Result (dBuV/m)	Limit (dBuV/m)	Margin (dB)	Remark
5550.000	43.42	0.98	44.40	82.25	-37.85	peak
9000.000	37.82	10.48	48.30	82.25	-33.95	peak
11805.000	35.26	17.43	52.69	82.25	-29.56	peak
12555.000	35.16	17.72	52.88	82.25	-29.37	peak
13860.000	33.38	21.67	55.05	82.25	-27.20	peak
17985.000	30.05	25.60	55.65	82.25	-26.60	peak

This report shall not be reproduced except in full, without the written approval of UL Verification Services (Guangzhou) Co., Ltd, Song Shan Lake Branch

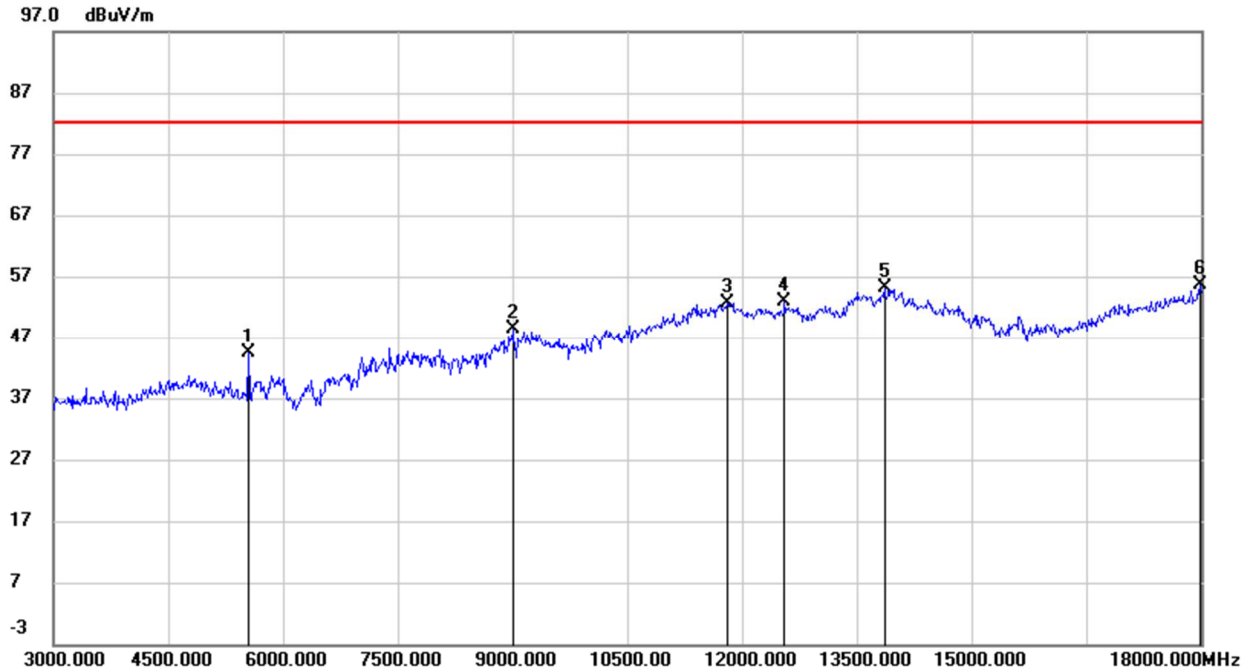

QPSK-20 MHz-Low Channel-Vertical

Frequency (MHz)	Reading (dBuV)	Correct (dB/m)	Result (dBuV/m)	Limit (dBuV/m)	Margin (dB)	Remark
5550.000	46.21	0.98	47.19	82.25	-35.06	peak
7395.000	41.31	6.40	47.71	82.25	-34.54	peak
9255.000	41.73	10.59	52.32	82.25	-29.93	peak
11865.000	35.78	17.59	53.37	82.25	-28.88	peak
13530.000	34.04	20.96	55.00	82.25	-27.25	peak
14820.000	36.92	18.62	55.54	82.25	-26.71	peak

QPSK-20 MHz-Mid Channel- Horizontal

Frequency (MHz)	Reading (dBuV)	Correct (dB/m)	Result (dBuV/m)	Limit (dBuV/m)	Margin (dB)	Remark
5610.000	43.04	1.16	44.20	82.25	-38.05	peak
7485.000	38.43	6.34	44.77	82.25	-37.48	peak
9360.000	37.90	10.64	48.54	82.25	-33.71	peak
11835.000	35.66	17.51	53.17	82.25	-29.08	peak
13635.000	33.80	21.19	54.99	82.25	-27.26	peak
17925.000	29.66	25.25	54.91	82.25	-27.34	peak

QPSK-20 MHz- Mid Channel-Vertical

Frequency (MHz)	Reading (dBuV)	Correct (dB/m)	Result (dBuV/m)	Limit (dBuV/m)	Margin (dB)	Remark
5610.000	43.76	1.16	44.92	82.25	-37.33	peak
7485.000	40.25	6.34	46.59	82.25	-35.66	peak
9360.000	40.69	10.64	51.33	82.25	-30.92	peak
11820.000	35.30	17.47	52.77	82.25	-29.48	peak
13560.000	33.56	21.04	54.60	82.25	-27.65	peak
17985.000	28.92	25.60	54.52	82.25	-27.73	peak

QPSK-20 MHz-High Channel- Horizontal

Frequency (MHz)	Reading (dBuV)	Correct (dB/m)	Result (dBuV/m)	Limit (dBuV/m)	Margin (dB)	Remark
5670.000	43.34	1.33	44.67	82.25	-37.58	peak
7710.000	38.96	6.33	45.29	82.25	-36.96	peak
9060.000	37.26	10.51	47.77	82.25	-34.48	peak
11835.000	35.89	17.51	53.40	82.25	-28.85	peak
13815.000	33.35	21.56	54.91	82.25	-27.34	peak

This report shall not be reproduced except in full, without the written approval of UL Verification Services (Guangzhou) Co., Ltd, Song Shan Lake Branch

17925.000	29.38	25.25	54.63	82.25	-27.62	peak

QPSK-20 MHz- High Channel-Vertical

Frequency (MHz)	Reading (dBuV)	Correct (dB/m)	Result (dBuV/m)	Limit (dBuV/m)	Margin (dB)	Remark
5670.000	44.94	1.33	46.27	82.25	-35.98	peak
7560.000	40.01	6.33	46.34	82.25	-35.91	peak
9450.000	39.65	10.67	50.32	82.25	-31.93	peak
11865.000	35.70	17.59	53.29	82.25	-28.96	peak
14085.000	32.89	21.61	54.50	82.25	-27.75	peak
15135.000	37.40	17.76	55.16	82.25	-27.09	peak

Note: Limit= -13dBm+95.2=82.25 dBuV/m

This report shall not be reproduced except in full, without the written approval of UL Verification Services (Guangzhou) Co., Ltd, Song Shan Lake Branch

LTE Band 4

QPSK-20 MHz-Low Channel- Horizontal

Frequency (MHz)	Reading (dBuV)	Correct (dB/m)	Result (dBuV/m)	Limit (dBuV/m)	Margin (dB)	Remark
5145.000	50.33	0.56	50.89	82.25	-31.36	peak
9255.000	37.53	10.59	48.12	82.25	-34.13	peak
11850.000	35.92	17.56	53.48	82.25	-28.77	peak
13470.000	34.48	20.77	55.25	82.25	-27.00	peak
13950.000	33.21	21.86	55.07	82.25	-27.18	peak
17760.000	30.43	24.27	54.70	82.25	-27.55	peak

QPSK-20 MHz-Low Channel- Vertical

Frequency (MHz)	Reading (dBuV)	Correct (dB/m)	Result (dBuV/m)	Limit (dBuV/m)	Margin (dB)	Remark
3420.000	50.44	-5.01	45.43	82.25	-36.82	peak
5145.000	50.49	0.56	51.05	82.25	-31.20	peak
10290.000	41.15	12.59	53.74	82.25	-28.51	peak
13920.000	33.69	21.79	55.48	82.25	-26.77	peak
15450.000	37.19	17.45	54.64	82.25	-27.61	peak
17955.000	29.00	25.42	54.42	82.25	-27.83	peak

QPSK-20 MHz-Mid Channel- Horizontal

Frequency (MHz)	Reading (dBuV)	Correct (dB/m)	Result (dBuV/m)	Limit (dBuV/m)	Margin (dB)	Remark
5175.000	49.78	0.59	50.37	82.25	-31.88	peak
7755.000	38.27	6.31	44.58	82.25	-37.67	peak
9165.000	37.04	10.55	47.59	82.25	-34.66	peak
11715.000	36.59	17.19	53.78	82.25	-28.47	peak
13965.000	33.49	21.89	55.38	82.25	-26.87	peak
18000.000	29.06	25.69	54.75	82.25	-27.50	peak

QPSK-20 MHz-Mid Channel- Vertical

Frequency (MHz)	Reading (dBuV)	Correct (dB/m)	Result (dBuV/m)	Limit (dBuV/m)	Margin (dB)	Remark
3450.000	50.29	-4.99	45.30	82.25	-36.95	peak
5175.000	49.76	0.59	50.35	82.25	-31.90	peak
10365.000	40.48	12.72	53.20	82.25	-29.05	peak
13845.000	33.44	21.62	55.06	82.25	-27.19	peak
15555.000	37.96	17.44	55.40	82.25	-26.85	peak
17985.000	29.94	25.60	55.54	82.25	-26.71	peak

QPSK-20 MHz-High Channel- Horizontal

Frequency (MHz)	Reading (dBuV)	Correct (dB/m)	Result (dBuV/m)	Limit (dBuV/m)	Margin (dB)	Remark
5220.000	44.93	0.62	45.55	82.25	-36.70	peak
8985.000	37.43	10.37	47.80	82.25	-34.45	peak
11685.000	35.86	17.10	52.96	82.25	-29.29	peak
12705.000	35.04	18.06	53.10	82.25	-29.15	peak
13860.000	33.61	21.67	55.28	82.25	-26.97	peak
17955.000	29.31	25.42	54.73	82.25	-27.52	peak

QPSK-20 MHz-High Channel- Vertical(worst case)

Frequency (MHz)	Reading (dBuV)	Correct (dB/m)	Result (dBuV/m)	Limit (dBuV/m)	Margin (dB)	Remark
5220.000	43.83	0.62	44.45	82.25	-37.80	peak
9570.000	38.01	10.87	48.88	82.25	-33.37	peak
10440.000	43.03	12.87	55.90	82.25	-26.35	peak
11745.000	36.23	17.27	53.50	82.25	-28.75	peak
13980.000	33.36	21.92	55.28	82.25	-26.97	peak
15675.000	35.72	17.52	53.24	82.25	-29.01	peak

This report shall not be reproduced except in full, without the written approval of UL Verification Services (Guangzhou) Co., Ltd, Song Shan Lake Branch

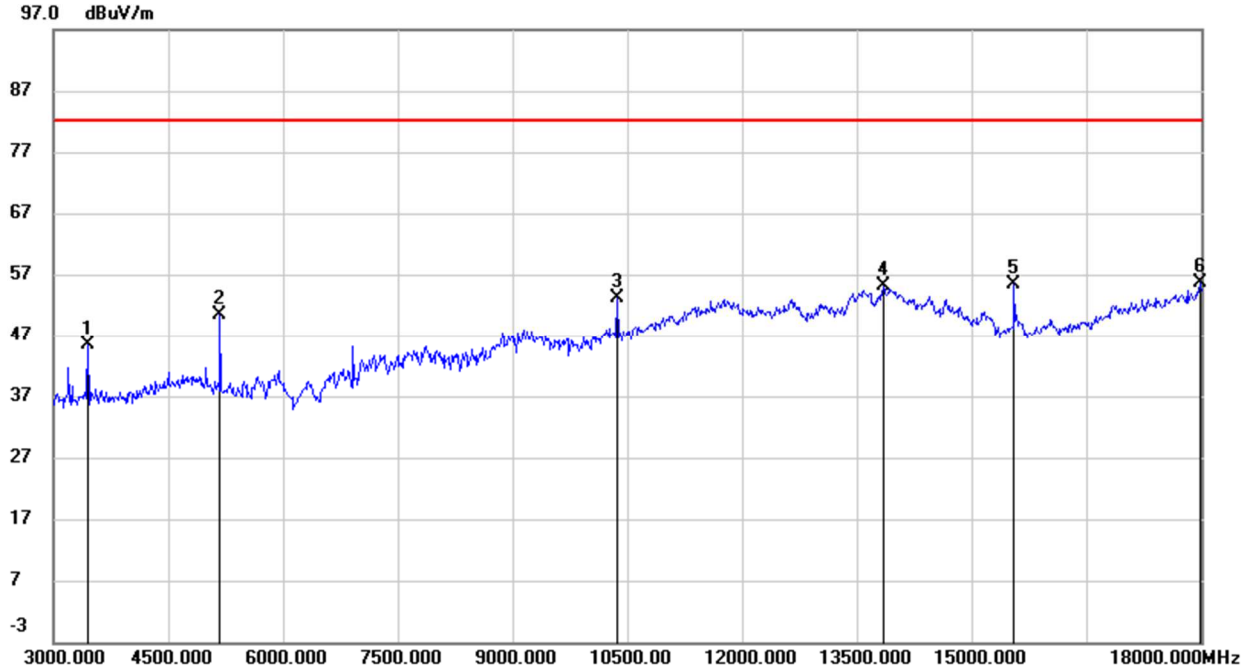

Note: Limit= -13dBm+95.2=82.25 dBuV/m

This report shall not be reproduced except in full, without the written approval of UL Verification Services (Guangzhou) Co., Ltd, Song Shan Lake Branch

LTE Band 5

QPSK-10 MHz-Low Channel- Horizontal

Frequency (MHz)	Reading (dBuV)	Correct (dB/m)	Result (dBuV/m)	Limit (dBuV/m)	Margin (dB)	Remark
1495.000	49.80	-12.74	37.06	82.25	-45.19	peak
2269.000	47.77	-9.68	38.09	82.25	-44.16	peak
4852.000	41.21	-0.74	40.47	82.25	-41.78	peak
5689.000	39.62	0.96	40.58	82.25	-41.67	peak
7768.000	39.17	5.66	44.83	82.25	-37.42	peak
9073.000	37.31	9.77	47.08	82.25	-35.17	peak

QPSK-20 MHz-Low Channel- Vertical(worst case)

Frequency (MHz)	Reading (dBuV)	Correct (dB/m)	Result (dBuV/m)	Limit (dBuV/m)	Margin (dB)	Remark
1495.000	54.96	-12.74	42.22	82.25	-40.03	peak
2494.000	49.48	-8.52	40.96	82.25	-41.29	peak
3250.000	44.85	-6.41	38.44	82.25	-43.81	peak
5734.000	42.31	1.08	43.39	82.25	-38.86	peak
7651.000	40.93	5.67	46.60	82.25	-35.65	peak
9136.000	37.51	9.80	47.31	82.25	-34.94	peak

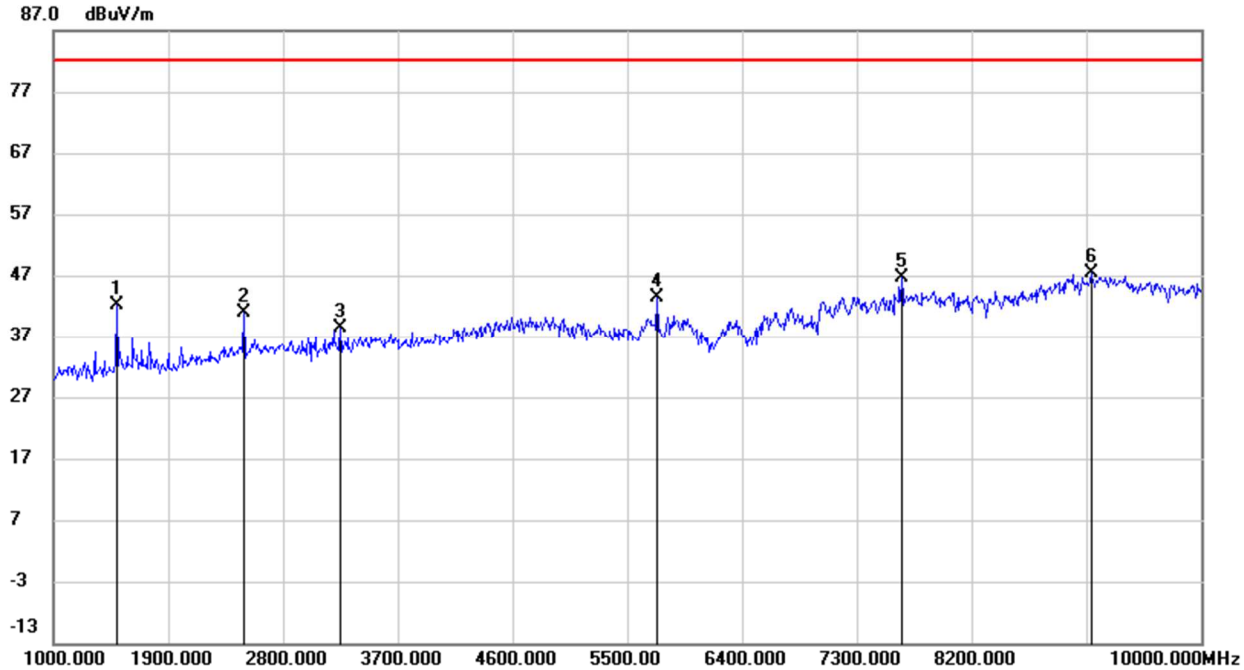

QPSK-10 MHz-Mid Channel- Horizontal

Frequency (MHz)	Reading (dBuV)	Correct (dB/m)	Result (dBuV/m)	Limit (dBuV/m)	Margin (dB)	Remark
1567.000	53.59	-12.49	41.10	82.25	-41.15	peak
3250.000	48.90	-6.41	42.49	82.25	-39.76	peak
5680.000	39.96	0.94	40.90	82.25	-41.35	peak
7030.000	37.22	6.18	43.40	82.25	-38.85	peak
7687.000	38.68	5.67	44.35	82.25	-37.90	peak
9325.000	37.28	9.87	47.15	82.25	-35.10	peak

QPSK-10 MHz-Mid Channel- Vertical

Frequency (MHz)	Reading (dBuV)	Correct (dB/m)	Result (dBuV/m)	Limit (dBuV/m)	Margin (dB)	Remark
(MHz)	(dBuV)	(dB/m)	(dBuV/m)	(dBuV/m)	(dB)	peak
1495.000	54.65	-12.74	41.91	82.25	-40.34	peak
2179.000	52.35	-10.13	42.22	82.25	-40.03	peak
2494.000	50.26	-8.52	41.74	82.25	-40.51	peak
3844.000	47.21	-4.91	42.30	82.25	-39.95	peak

This report shall not be reproduced except in full, without the written approval of UL Verification Services (Guangzhou) Co., Ltd, Song Shan Lake Branch

7606.000	38.30	5.68	43.98	82.25	-38.27	peak

QPSK-10 MHz-High Channel- Horizontal

Frequency (MHz)	Reading (dBuV)	Correct (dB/m)	Result (dBuV/m)	Limit (dBuV/m)	Margin (dB)	Remark
1675.000	53.28	-12.13	41.15	82.25	-41.10	peak
2512.000	46.80	-8.45	38.35	82.25	-43.90	peak
4627.000	42.08	-1.63	40.45	82.25	-41.80	peak
5860.000	38.95	1.45	40.40	82.25	-41.85	peak
7633.000	37.82	5.68	43.50	82.25	-38.75	peak
9145.000	37.20	9.80	47.00	82.25	-35.25	peak

QPSK-10 MHz-High Channel- Vertical

Frequency (MHz)	Reading (dBuV)	Correct (dB/m)	Result (dBuV/m)	Limit (dBuV/m)	Margin (dB)	Remark
1495.000	54.72	-12.74	41.98	82.25	-40.27	peak
2494.000	49.30	-8.52	40.78	82.25	-41.47	peak
3358.000	46.03	-6.17	39.86	82.25	-42.39	peak
4861.000	41.30	-0.70	40.60	82.25	-41.65	peak
7633.000	38.14	5.68	43.82	82.25	-38.43	peak
9064.000	37.12	9.76	46.88	82.25	-35.37	peak

Note: Limit= -13dBm+95.2=82.25 dBuV/m

This report shall not be reproduced except in full, without the written approval of UL Verification Services (Guangzhou) Co., Ltd, Song Shan Lake Branch

LTE Band 7

QPSK-20 MHz-Low Channel- Horizontal

Frequency (MHz)	Reading (dBuV)	Correct (dB/m)	Result (dBuV/m)	Limit (dBuV/m)	Margin (dB)	Remark
4995.000	42.68	0.43	43.11	70.25	-39.14	peak
9000.000	37.78	10.48	48.26	70.25	-33.99	peak
10005.000	40.75	12.02	52.77	70.25	-29.48	peak
11760.000	35.57	17.31	52.88	70.25	-29.37	peak
13920.000	33.70	21.79	55.49	70.25	-26.76	peak
17955.000	29.06	25.42	54.48	70.25	-27.77	peak

QPSK-20 MHz-Low Channel- Vertical

Frequency (MHz)	Reading (dBuV)	Correct (dB/m)	Result (dBuV/m)	Limit (dBuV/m)	Margin (dB)	Remark
4995.000	45.10	0.43	45.53	70.25	-36.72	peak
7500.000	41.01	6.33	47.34	70.25	-34.91	peak
10005.000	46.79	12.02	58.81	70.25	-23.44	peak
11790.000	36.42	17.38	53.80	70.25	-28.45	peak
13995.000	32.99	21.95	54.94	70.25	-27.31	peak
17775.000	30.10	24.36	54.46	70.25	-27.79	peak

QPSK-20 MHz-Mid Channel- Horizontal

Frequency (MHz)	Reading (dBuV)	Correct (dB/m)	Result (dBuV/m)	Limit (dBuV/m)	Margin (dB)	Remark
6555.000	39.26	4.49	43.75	70.25	-38.50	peak
9000.000	37.53	10.48	48.01	70.25	-34.24	peak
10110.000	40.43	12.22	52.65	70.25	-29.60	peak
11790.000	36.12	17.38	53.50	70.25	-28.75	peak
13920.000	33.37	21.79	55.16	70.25	-27.09	peak
17910.000	29.46	25.16	54.62	70.25	-27.63	peak

QPSK-20 MHz-Mid Channel- Vertical

Frequency (MHz)	Reading (dBuV)	Correct (dB/m)	Result (dBuV/m)	Limit (dBuV/m)	Margin (dB)	Remark
6555.000	38.29	4.49	42.78	70.25	-39.47	peak
7890.000	38.66	6.31	44.97	70.25	-37.28	peak
10110.000	47.88	12.22	60.10	70.25	-22.15	peak
11715.000	35.86	17.19	53.05	70.25	-29.20	peak
13545.000	34.06	20.99	55.05	70.25	-27.20	peak
18000.000	29.08	25.69	54.77	70.25	-27.48	peak

QPSK-20 MHz-High Channel- Horizontal

Frequency (MHz)	Reading (dBuV)	Correct (dB/m)	Result (dBuV/m)	Limit (dBuV/m)	Margin (dB)	Remark
6570.000	40.43	4.57	45.00	70.25	-37.25	peak
9075.000	37.92	10.52	48.44	70.25	-33.81	peak
10200.000	45.18	12.40	57.58	70.25	-24.67	peak
11880.000	35.57	17.63	53.20	70.25	-29.05	peak
13920.000	33.26	21.79	55.05	70.25	-27.20	peak
17985.000	29.66	25.60	55.26	70.25	-26.99	peak

QPSK-20 MHz-High Channel- Vertical(worst case)

Frequency (MHz)	Reading (dBuV)	Correct (dB/m)	Result (dBuV/m)	Limit (dBuV/m)	Margin (dB)	Remark
5100.000	44.13	0.53	44.66	70.25	-37.59	peak
6570.000	42.22	4.57	46.79	70.25	-35.46	peak
10200.000	52.83	12.40	65.23	70.25	-17.02	peak
11730.000	36.10	17.22	53.32	70.25	-28.93	peak
13935.000	34.00	21.82	55.82	70.25	-26.43	peak
17955.000	29.02	25.42	54.44	70.25	-27.81	peak

This report shall not be reproduced except in full, without the written approval of UL Verification Services (Guangzhou) Co., Ltd, Song Shan Lake Branch

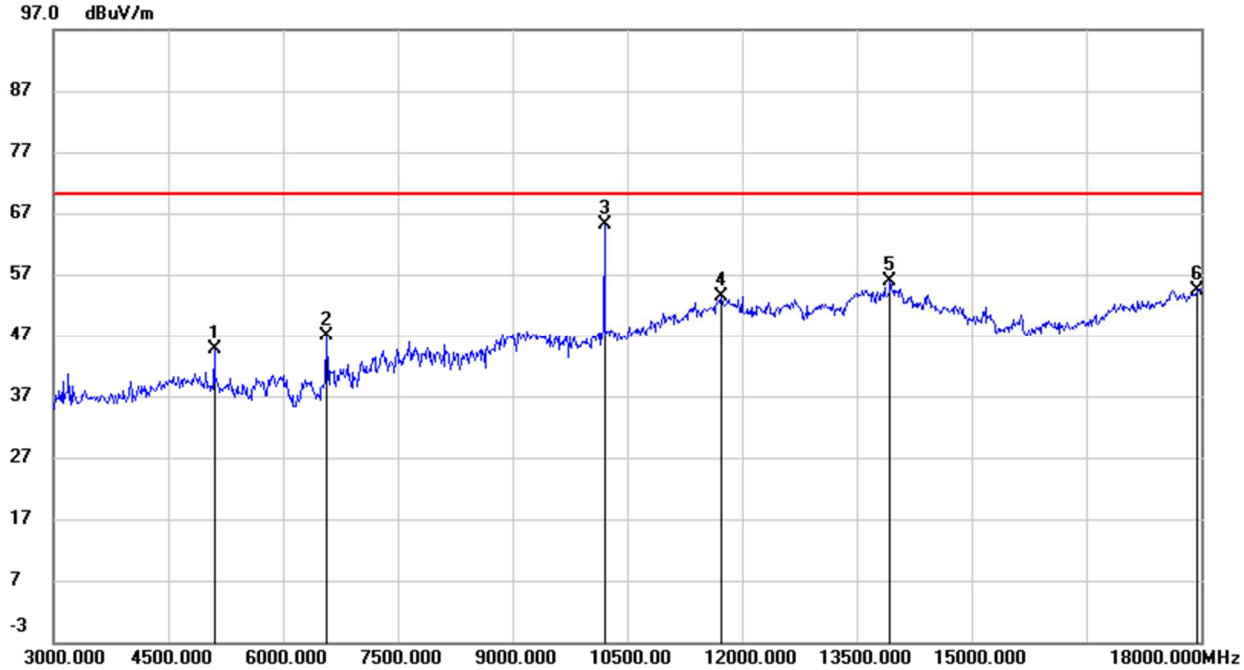

Note: Limit= -25dBm+95.2=70.25 dBuV/m

This report shall not be reproduced except in full, without the written approval of UL Verification Services (Guangzhou) Co., Ltd, Song Shan Lake Branch

LTE Band 12

QPSK-10 MHz-Low Channel- Horizontal

Frequency (MHz)	Reading (dBuV)	Correct (dB/m)	Result (dBuV/m)	Limit (dBuV/m)	Margin (dB)	Remark
1324.000	51.04	-13.53	37.51	82.25	-44.74	peak
2179.000	50.64	-10.13	40.51	82.25	-41.74	peak
4852.000	41.74	-0.74	41.00	82.25	-41.25	peak
7003.000	37.25	6.19	43.44	82.25	-38.81	peak
7723.000	39.53	5.67	45.20	82.25	-37.05	peak
9073.000	37.69	9.77	47.46	82.25	-34.79	peak

QPSK-10 MHz-Low Channel- Vertical

Frequency (MHz)	Reading (dBuV)	Correct (dB/m)	Result (dBuV/m)	Limit (dBuV/m)	Margin (dB)	Remark
1495.000	53.74	-12.74	41.00	82.25	-41.25	peak
2035.000	54.60	-10.89	43.71	82.25	-38.54	peak
2287.000	51.39	-9.58	41.81	82.25	-40.44	peak
4564.000	41.49	-1.89	39.60	82.25	-42.65	peak
7885.000	40.43	5.66	46.09	82.25	-36.16	peak
9073.000	37.26	9.77	47.03	82.25	-35.22	peak

QPSK-10 MHz-Mid Channel- Horizontal(worst case)

Frequency (MHz)	Reading (dBuV)	Correct (dB/m)	Result (dBuV/m)	Limit (dBuV/m)	Margin (dB)	Remark
1198.000	61.84	-14.11	47.73	82.25	-34.52	peak
1405.000	55.28	-13.15	42.13	82.25	-40.12	peak
2809.000	47.05	-7.55	39.50	82.25	-42.75	peak
4861.000	40.59	-0.70	39.89	82.25	-42.36	peak
7723.000	39.16	5.67	44.83	82.25	-37.42	peak
8749.000	38.93	7.98	46.91	82.25	-35.34	peak

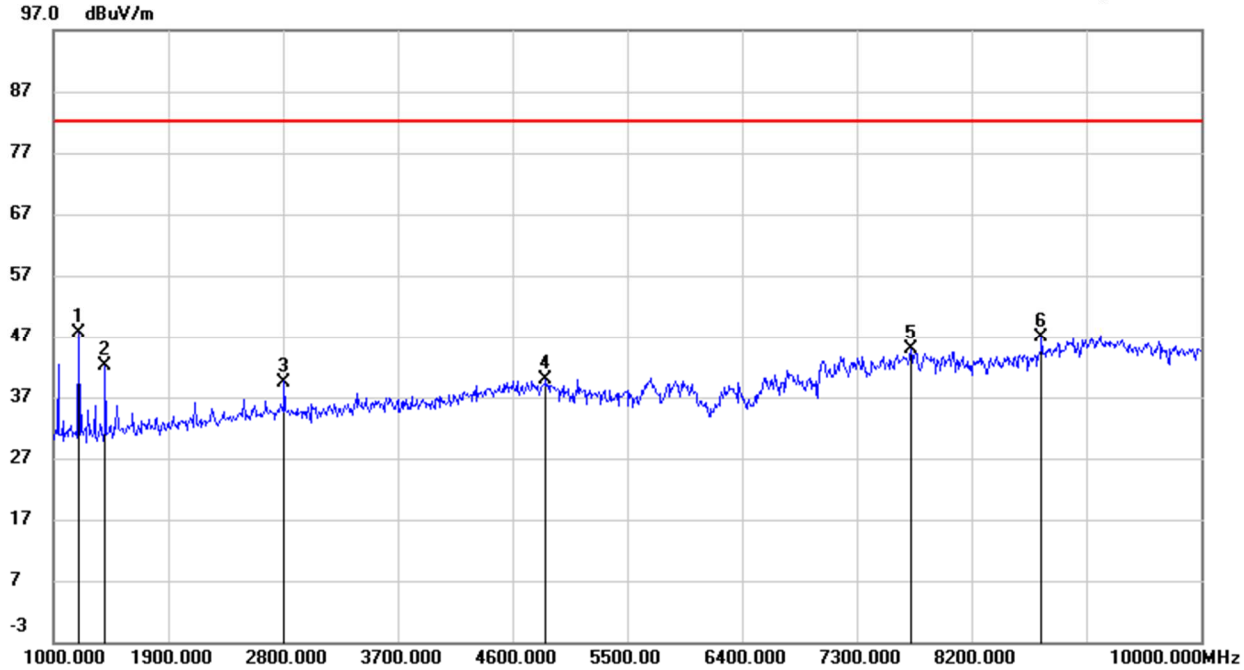

QPSK-10 MHz-Mid Channel- Vertical

Frequency (MHz)	Reading (dBuV)	Correct (dB/m)	Result (dBuV/m)	Limit (dBuV/m)	Margin (dB)	Remark
1405.000	55.57	-13.15	42.42	82.25	-39.83	peak
1495.000	54.53	-12.74	41.79	82.25	-40.46	peak
2494.000	51.58	-8.52	43.06	82.25	-39.19	peak
4996.000	40.11	-0.17	39.94	82.25	-42.31	peak
7633.000	38.02	5.68	43.70	82.25	-38.55	peak

This report shall not be reproduced except in full, without the written approval of UL Verification Services (Guangzhou) Co., Ltd, Song Shan Lake Branch

9181.000	37.14	9.81	46.95	82.25	-35.30	peak

QPSK-10 MHz-High Channel- Horizontal

Frequency (MHz)	Reading (dBuV)	Correct (dB/m)	Result (dBuV/m)	Limit (dBuV/m)	Margin (dB)	Remark
1405.000	53.15	-13.15	40.00	82.25	-42.25	peak
2116.000	48.12	-10.47	37.65	82.25	-44.60	peak
2827.000	48.48	-7.50	40.98	82.25	-41.27	peak
4753.000	41.18	-1.13	40.05	82.25	-42.20	peak
7192.000	37.62	6.00	43.62	82.25	-38.63	peak
9244.000	37.08	9.83	46.91	82.25	-35.34	peak

QPSK-10 MHz-High Channel- Vertical

Frequency (MHz)	Reading (dBuV)	Correct (dB/m)	Result (dBuV/m)	Limit (dBuV/m)	Margin (dB)	Remark
1495.000	55.05	-12.74	42.31	82.25	-39.94	peak
2044.000	53.81	-10.84	42.97	82.25	-39.28	peak
2494.000	49.36	-8.52	40.84	82.25	-41.41	peak
5896.000	41.49	1.56	43.05	82.25	-39.20	peak
7003.000	40.70	6.19	46.89	82.25	-35.36	peak
9154.000	37.62	9.80	47.42	82.25	-34.83	peak

Note: Limit= -13dBm+95.2=82.25 dBuV/m

This report shall not be reproduced except in full, without the written approval of UL Verification Services (Guangzhou) Co., Ltd, Song Shan Lake Branch

LTE Band 13

In the 1559-1610 MHz frequency, the limit is−80dBW EIRP for narrowband and all modulation are tested and met requirements.

QPSK-10 MHz- Horizontal(worst case)

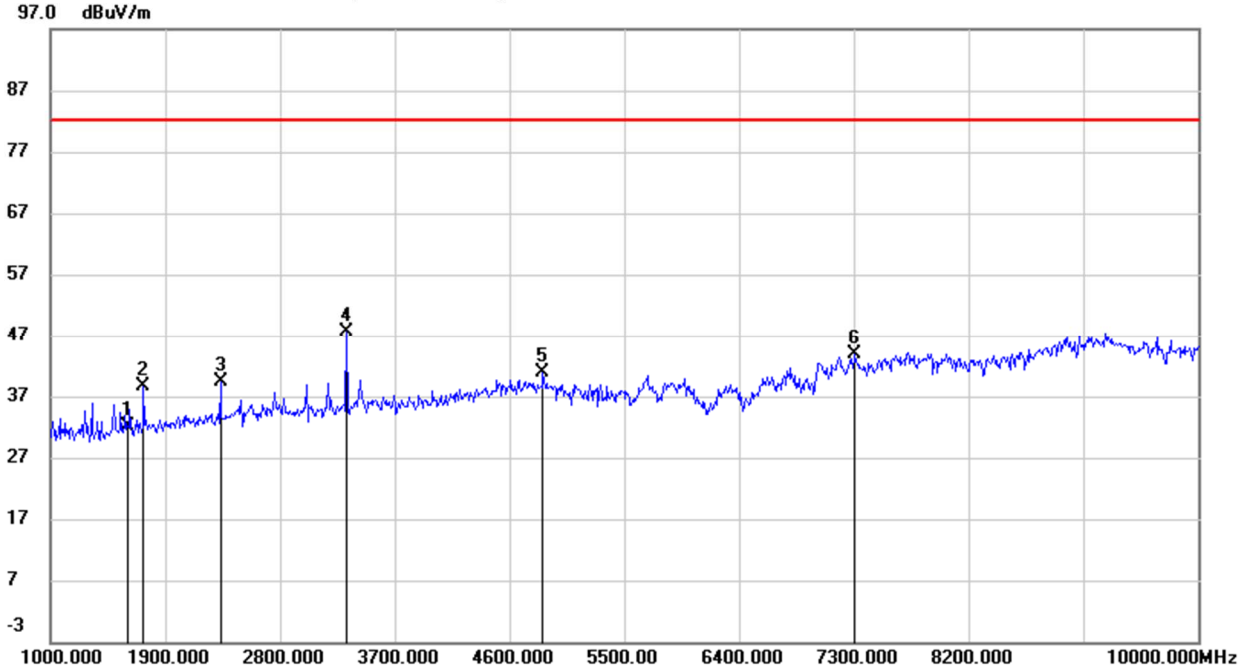

Frequency (MHz)	Reading (dBuV)	Correct (dB/m)	Result (dBuV/m)	Limit (dBuV/m)	Margin (dB)	Remark
1600.000	44.48	-12.38	32.10	55.25	-50.15	peak
1729.000	50.59	-11.95	38.64	82.25	-43.61	peak
2332.000	48.84	-9.36	39.48	82.25	-42.77	peak
3322.000	53.98	-6.25	47.73	82.25	-34.52	peak
4861.000	41.48	-0.70	40.78	82.25	-41.47	peak
7309.000	37.94	5.88	43.82	82.25	-38.43	peak

QPSK-10 MHz- Vertical

Frequency (MHz)	Reading (dBuV)	Correct (dB/m)	Result (dBuV/m)	Limit (dBuV/m)	Margin (dB)	Remark
1495.000	52.87	-12.74	40.13	82.25	-42.12	peak
1600.000	44.45	-12.38	32.07	55.25	-50.18	peak
2494.000	50.19	-8.52	41.67	82.25	-40.58	peak
4663.000	42.26	-1.49	40.77	82.25	-41.48	peak
5662.000	39.74	0.88	40.62	82.25	-41.63	peak
9127.000	37.14	9.79	46.93	82.25	-35.32	peak

Note: Limit= -13dBm+95.2=82.25 dBuV/m

This report shall not be reproduced except in full, without the written approval of UL Verification Services (Guangzhou) Co., Ltd, Song Shan Lake Branch

LTE Band 25

QPSK-20 MHz-Low Channel- Horizontal

Frequency (MHz)	Reading (dBuV)	Correct (dB/m)	Result (dBuV/m)	Limit (dBuV/m)	Margin (dB)	Remark
5550.000	46.74	0.98	47.72	82.25	-34.53	peak
7395.000	41.26	6.40	47.66	82.25	-34.59	peak
11820.000	35.52	17.47	52.99	82.25	-29.26	peak
12750.000	35.91	18.16	54.07	82.25	-28.18	peak
13980.000	32.92	21.92	54.84	82.25	-27.41	peak
17775.000	30.72	24.36	55.08	82.25	-27.17	peak

QPSK-20 MHz-Low Channel- Vertical

Frequency (MHz)	Reading (dBuV)	Correct (dB/m)	Result (dBuV/m)	Limit (dBuV/m)	Margin (dB)	Remark
5550.000	44.14	0.98	45.12	82.25	-37.13	peak
7395.000	42.13	6.40	48.53	82.25	-33.72	peak
9255.000	40.07	10.59	50.66	82.25	-31.59	peak
11910.000	35.28	17.72	53.00	82.25	-29.25	peak
13950.000	33.05	21.86	54.91	82.25	-27.34	peak
17865.000	29.88	24.89	54.77	82.25	-27.48	peak

QPSK-20 MHz-Mid Channel- Horizontal

Frequency (MHz)	Reading (dBuV)	Correct (dB/m)	Result (dBuV/m)	Limit (dBuV/m)	Margin (dB)	Remark
5610.000	45.50	1.16	46.66	82.25	-35.59	peak
7485.000	40.24	6.34	46.58	82.25	-35.67	peak
9360.000	38.97	10.64	49.61	82.25	-32.64	peak
11790.000	36.67	17.38	54.05	82.25	-28.20	peak
14055.000	33.21	21.73	54.94	82.25	-27.31	peak
17655.000	31.10	23.64	54.74	82.25	-27.51	peak

QPSK-20 MHz-Mid Channel- Vertical(worst case)

Frequency (MHz)	Reading (dBuV)	Correct (dB/m)	Result (dBuV/m)	Limit (dBuV/m)	Margin (dB)	Remark
5610.000	47.78	1.16	48.94	82.25	-33.31	5610.000
7485.000	44.34	6.34	50.68	82.25	-31.57	7485.000
9360.000	42.42	10.64	53.06	82.25	-29.19	9360.000
11700.000	36.41	17.14	53.55	82.25	-28.70	11700.000
13860.000	33.41	21.67	55.08	82.25	-27.17	13860.000
17940.000	29.64	25.34	54.98	82.25	-27.27	17940.000

QPSK-20 MHz-High Channel- Vertical

Frequency (MHz)	Reading (dBuV)	Correct (dB/m)	Result (dBuV/m)	Limit (dBuV/m)	Margin (dB)	Remark
5685.000	45.18	1.37	46.55	82.25	-35.70	peak
9480.000	41.22	10.68	51.90	82.25	-30.35	peak
11520.000	36.09	16.65	52.74	82.25	-29.51	peak
13920.000	33.30	21.79	55.09	82.25	-27.16	peak
15180.000	37.56	17.72	55.28	82.25	-26.97	peak
17940.000	29.27	25.34	54.61	82.25	-27.64	peak

This report shall not be reproduced except in full, without the written approval of UL Verification Services (Guangzhou) Co., Ltd, Song Shan Lake Branch

QPSK-20 MHz-High Channel- Horizontal(worst case)

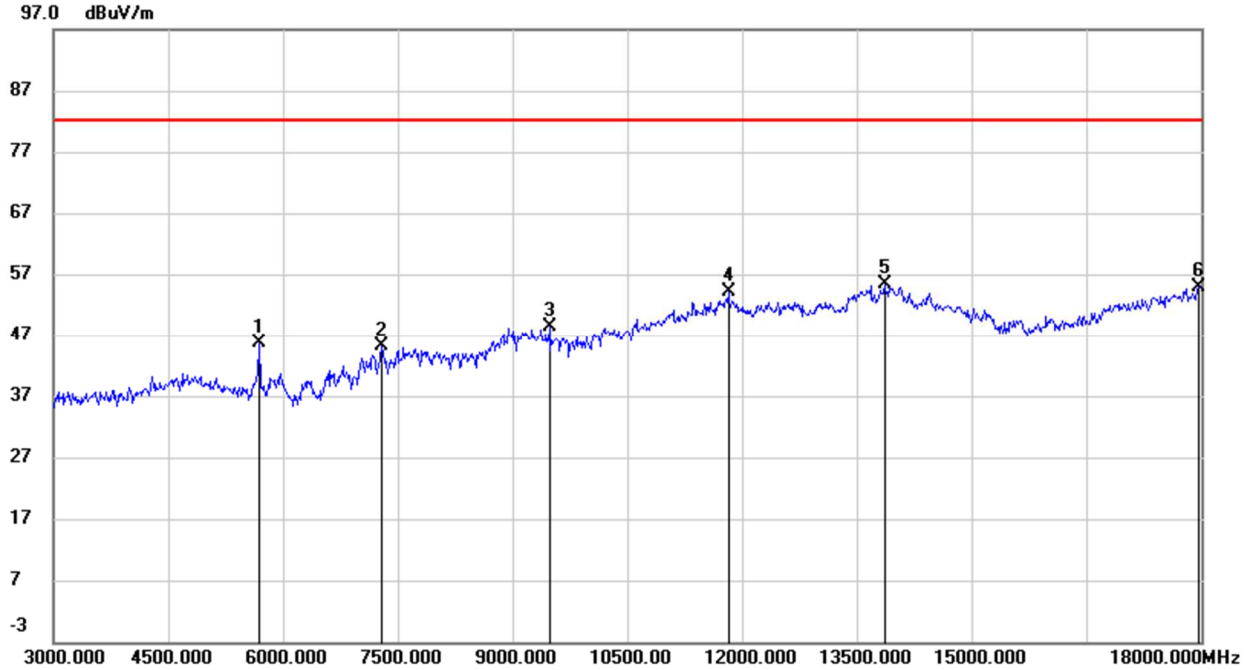

Frequency (MHz)	Reading (dBuV)	Correct (dB/m)	Result (dBuV/m)	Limit (dBuV/m)	Margin (dB)	Remark
5685.000	44.18	1.37	45.55	82.25	-36.70	peak
7290.000	38.67	6.48	45.15	82.25	-37.10	peak
9480.000	37.76	10.68	48.44	82.25	-33.81	peak
11820.000	36.65	17.47	54.12	82.25	-28.13	peak
13860.000	33.72	21.67	55.39	82.25	-26.86	peak
17970.000	29.38	25.51	54.89	82.25	-27.36	peak

Note: Limit= -13dBm+95.2=82.25 dBuV/m

This report shall not be reproduced except in full, without the written approval of UL Verification Services (Guangzhou) Co., Ltd, Song Shan Lake Branch

LTE Band 26

QPSK-10 MHz-Mid Channel- Horizontal

Frequency (MHz)	Reading (dBuV)	Correct (dB/m)	Result (dBuV/m)	Limit (dBuV/m)	Margin (dB)	Remark
1621.000	54.84	-12.31	42.53	82.25	-39.72	peak
2440.000	47.31	-8.80	38.51	82.25	-43.74	peak
4519.000	41.96	-2.06	39.90	82.25	-42.35	peak
7030.000	37.15	6.18	43.33	82.25	-38.92	peak
7876.000	38.93	5.66	44.59	82.25	-37.66	peak
8947.000	38.12	9.37	47.49	82.25	-34.76	peak

QPSK-10 MHz-Mid Channel- Vertical(worst case)

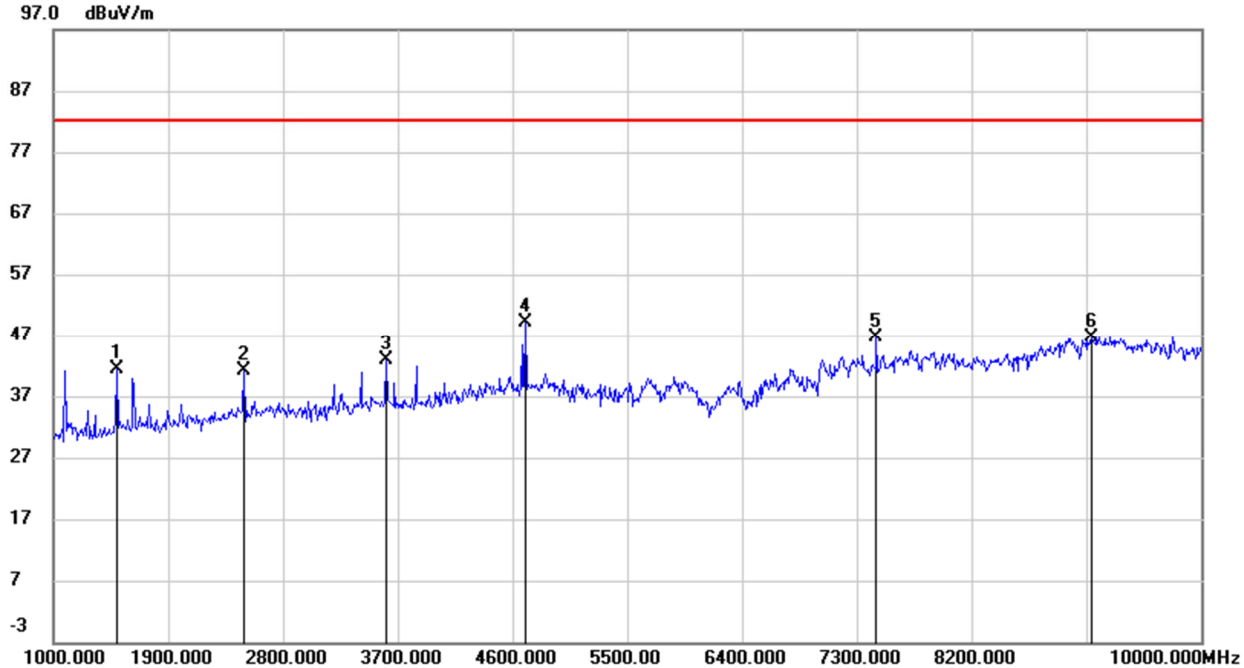

Frequency (MHz)	Reading (dBuV)	Correct (dB/m)	Result (dBuV/m)	Limit (dBuV/m)	Margin (dB)	Remark
1495.000	54.18	-12.74	41.44	82.25	-40.81	peak
2494.000	49.62	-8.52	41.10	82.25	-41.15	peak
3610.000	48.41	-5.55	42.86	82.25	-39.39	peak
4699.000	50.41	-1.35	49.06	82.25	-33.19	peak
7453.000	40.98	5.73	46.71	82.25	-35.54	peak
9136.000	36.90	9.80	46.70	82.25	-35.55	peak

QPSK-15 MHz-Low Channel- Horizontal

Frequency (MHz)	Reading (dBuV)	Correct (dB/m)	Result (dBuV/m)	Limit (dBuV/m)	Margin (dB)	Remark
1423.000	53.97	-13.07	40.90	82.25	-41.35	peak
1648.000	51.07	-12.22	38.85	82.25	-43.40	peak
2467.000	46.99	-8.66	38.33	82.25	-43.92	peak
4978.000	39.94	-0.24	39.70	82.25	-42.55	peak
7507.000	38.49	5.69	44.18	82.25	-38.07	peak
9145.000	37.22	9.80	47.02	82.25	-35.23	peak

QPSK-15 MHz-Low Channel- Vertical

Frequency (MHz)	Reading (dBuV)	Correct (dB/m)	Result (dBuV/m)	Limit (dBuV/m)	Margin (dB)	Remark
1495.000	52.97	-12.74	40.23	82.25	-42.02	peak
2494.000	49.88	-8.52	41.36	82.25	-40.89	peak
4123.000	43.99	-3.90	40.09	82.25	-42.16	peak
7174.000	38.37	6.02	44.39	82.25	-37.86	peak
8002.000	39.13	5.65	44.78	82.25	-37.47	peak

This report shall not be reproduced except in full, without the written approval of UL Verification Services (Guangzhou) Co., Ltd, Song Shan Lake Branch

9073.000	37.51	9.77	47.28	82.25	-34.97	peak

QPSK-15 MHz-Mid Channel- Horizontal

Frequency (MHz)	Reading (dBuV)	Correct (dB/m)	Result (dBuV/m)	Limit (dBuV/m)	Margin (dB)	Remark
1657.000	51.53	-12.19	39.34	82.25	-42.91	peak
2494.000	47.06	-8.52	38.54	82.25	-43.71	peak
4843.000	40.54	-0.78	39.76	82.25	-42.49	peak
7021.000	37.80	6.19	43.99	82.25	-38.26	peak
8569.000	40.21	6.72	46.93	82.25	-35.32	peak
9163.000	37.12	9.80	46.92	82.25	-35.33	peak

QPSK-15 MHz-High Channel- Horizontal

Frequency (MHz)	Reading (dBuV)	Correct (dB/m)	Result (dBuV/m)	Limit (dBuV/m)	Margin (dB)	Remark
1036.000	53.90	-14.87	39.03	82.25	-43.22	peak
1855.000	54.39	-11.54	42.85	82.25	-39.40	peak
4861.000	40.54	-0.70	39.84	82.25	-42.41	peak
5869.000	38.57	1.48	40.05	82.25	-42.20	peak
7309.000	38.07	5.88	43.95	82.25	-38.30	peak
9136.000	37.14	9.80	46.94	82.25	-35.31	peak

QPSK-15 MHz-High Channel- Vertical

Frequency (MHz)	Reading (dBuV)	Correct (dB/m)	Result (dBuV/m)	Limit (dBuV/m)	Margin (dB)	Remark
1270.000	53.03	-13.78	39.25	82.25	-43.00	peak
1495.000	54.24	-12.74	41.50	82.25	-40.75	peak
2494.000	49.93	-8.52	41.41	82.25	-40.84	peak
4942.000	40.39	-0.38	40.01	82.25	-42.24	peak
7759.000	40.81	5.67	46.48	82.25	-35.77	peak
9145.000	37.39	9.80	47.19	82.25	-35.06	peak

QPSK-15 MHz-Mid Channel- Vertical

Frequency (MHz)	Reading (dBuV)	Correct (dB/m)	Result (dBuV/m)	Limit (dBuV/m)	Margin (dB)	Remark
1063.000	55.22	-14.74	40.48	82.25	-41.77	peak
1675.000	55.37	-12.13	43.24	82.25	-39.01	peak
2512.000	51.82	-8.45	43.37	82.25	-38.88	peak
2701.000	51.05	-7.89	43.16	82.25	-39.09	peak
6787.000	40.81	5.14	45.95	82.25	-36.30	peak
9379.000	38.05	9.90	47.95	82.25	-34.30	peak

Note: Limit= -13dBm+95.2=82.25 dBuV/m

This report shall not be reproduced except in full, without the written approval of UL Verification Services (Guangzhou) Co., Ltd, Song Shan Lake Branch

LTE Band 38

QPSK-20 MHz-Low Channel- Horizontal

Frequency (MHz)	Reading (dBuV)	Correct (dB/m)	Result (dBuV/m)	Limit (dBuV/m)	Margin (dB)	Remark
7725.000	38.06	6.32	44.38	70.25	-25.87	peak
9150.000	37.15	10.54	47.69	70.25	-22.56	peak
10305.000	49.10	12.61	61.71	70.25	-8.54	peak
11715.000	35.83	17.19	53.02	70.25	-17.23	peak
13950.000	33.98	21.86	55.84	70.25	-14.41	peak
17865.000	29.65	24.89	54.54	70.25	-15.71	peak

QPSK-20 MHz-Low Channel- Vertical(worst case)

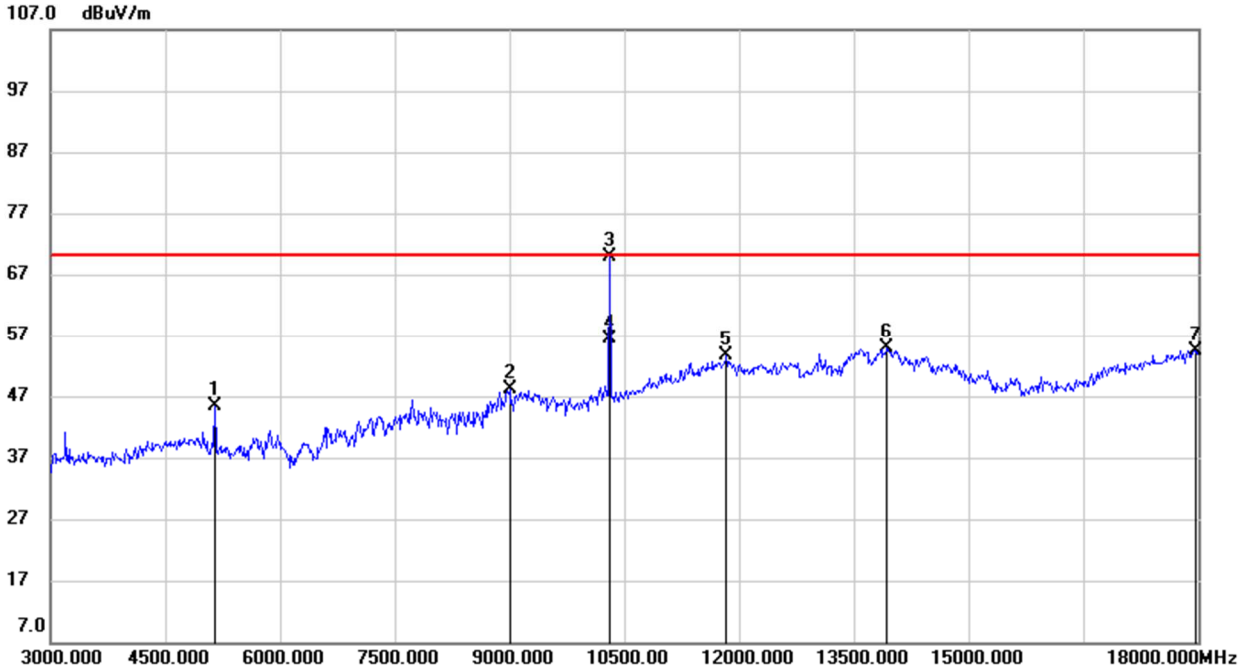

Frequency (MHz)	Reading (dBuV)	Correct (dB/m)	Result (dBuV/m)	Limit (dBuV/m)	Margin (dB)	Remark
5145.000	44.73	0.56	45.29	70.25	-24.96	peak
9000.000	37.64	10.48	48.12	70.25	-22.13	peak
10305.000	57.19	12.61	69.80	70.25	-0.45	peak
10305.000	43.87	12.61	56.48	70.25	-13.77	peak
11835.000	36.17	17.51	53.68	70.25	-16.57	peak
13935.000	33.02	21.82	54.84	70.25	-15.41	peak

QPSK-20 MHz-Mid Channel- Horizontal

Frequency (MHz)	Reading (dBuV)	Correct (dB/m)	Result (dBuV/m)	Limit (dBuV/m)	Margin (dB)	Remark
7770.000	39.72	6.31	46.03	70.25	-24.22	peak
9150.000	37.33	10.54	47.87	70.25	-22.38	peak
10365.000	53.59	12.72	66.31	70.25	-3.94	peak
11835.000	35.69	17.51	53.20	70.25	-17.05	peak
13965.000	32.99	21.89	54.88	70.25	-15.37	peak
17940.000	29.51	25.34	54.85	70.25	-15.40	peak

QPSK-20 MHz-Mid Channel- Vertical

Frequency (MHz)	Reading (dBuV)	Correct (dB/m)	Result (dBuV/m)	Limit (dBuV/m)	Margin (dB)	Remark
8025.000	38.68	6.34	45.02	70.25	-25.23	peak
9000.000	38.13	10.48	48.61	70.25	-21.64	peak
10365.000	46.86	12.72	59.58	70.25	-10.67	peak
11805.000	36.04	17.43	53.47	70.25	-16.78	peak
13965.000	33.46	21.89	55.35	70.25	-14.90	peak

This report shall not be reproduced except in full, without the written approval of UL Verification Services (Guangzhou) Co., Ltd, Song Shan Lake Branch

17955.000	29.66	25.42	55.08	70.25	-15.17	peak

QPSK-20 MHz-High Channel- Horizontal

Frequency (MHz)	Reading (dBuV)	Correct (dB/m)	Result (dBuV/m)	Limit (dBuV/m)	Margin (dB)	Remark
7770.000	38.96	6.31	45.27	70.25	-24.98	peak
9255.000	37.00	10.59	47.59	70.25	-22.66	peak
10425.000	47.25	12.84	60.09	70.25	-10.16	peak
11820.000	35.91	17.47	53.38	70.25	-16.87	peak
13965.000	33.43	21.89	55.32	70.25	-14.93	peak
17955.000	29.73	25.42	55.15	70.25	-15.10	peak

QPSK-20 MHz-High Channel- Vertical

Frequency (MHz)	Reading (dBuV)	Correct (dB/m)	Result (dBuV/m)	Limit (dBuV/m)	Margin (dB)	Remark
7815.000	40.61	6.32	46.93	70.25	-23.32	peak
8985.000	37.11	10.37	47.48	70.25	-22.77	peak
10425.000	55.28	12.84	68.12	70.25	-2.13	peak
11685.000	35.70	17.10	52.80	70.25	-17.45	peak
13965.000	33.37	21.89	55.26	70.25	-14.99	peak
17925.000	29.22	25.25	54.47	70.25	-15.78	peak

Note: Limit= -25dBm+95.2=70.25 dBuV/m

This report shall not be reproduced except in full, without the written approval of UL Verification Services (Guangzhou) Co., Ltd, Song Shan Lake Branch

LTE Band 41

QPSK-20 MHz-Low Channel- Horizontal

Frequency (MHz)	Reading (dBuV)	Correct (dB/m)	Result (dBuV/m)	Limit (dBuV/m)	Margin (dB)	Remark
7500.000	39.42	6.33	45.75	70.25	-24.50	peak
9990.000	41.46	11.98	53.44	70.25	-16.81	peak
11835.000	35.89	17.51	53.40	70.25	-16.85	peak
12810.000	35.86	18.30	54.16	70.25	-16.09	peak
13980.000	34.09	21.92	56.01	70.25	-14.24	peak
18000.000	29.69	25.69	55.38	70.25	-14.87	peak

QPSK-20 MHz-Low Channel- Vertical

Frequency (MHz)	Reading (dBuV)	Correct (dB/m)	Result (dBuV/m)	Limit (dBuV/m)	Margin (dB)	Remark
7905.000	39.22	6.31	45.53	70.25	-24.72	peak
9990.000	49.26	11.98	61.24	70.25	-9.01	peak
11805.000	35.63	17.43	53.06	70.25	-17.19	peak
12810.000	35.21	18.30	53.51	70.25	-16.74	peak
13950.000	33.36	21.86	55.22	70.25	-15.03	peak
17760.000	30.47	24.27	54.74	70.25	-15.51	peak

QPSK-20 MHz-Mid Channel- Horizontal

Frequency (MHz)	Reading (dBuV)	Correct (dB/m)	Result (dBuV/m)	Limit (dBuV/m)	Margin (dB)	Remark
7275.000	37.96	6.49	44.45	70.25	-25.80	peak
8940.000	38.18	10.04	48.22	70.25	-22.03	peak
10335.000	48.19	12.67	60.86	70.25	-9.39	peak
11805.000	35.99	17.43	53.42	70.25	-16.83	peak
13950.000	33.74	21.86	55.60	70.25	-14.65	peak
17955.000	29.61	25.42	55.03	70.25	-15.22	peak

QPSK-20 MHz-Mid Channel- Vertical(worst case)

Frequency (MHz)	Reading (dBuV)	Correct (dB/m)	Result (dBuV/m)	Limit (dBuV/m)	Margin (dB)	Remark
7755.000	40.34	6.31	46.65	70.25	-23.60	peak
9135.000	36.97	10.55	47.52	70.25	-22.73	peak
10335.000	52.27	12.67	64.94	70.25	-5.31	peak
11685.000	35.99	17.10	53.09	70.25	-17.16	peak
13920.000	33.26	21.79	55.05	70.25	-15.20	peak
18000.000	29.22	25.69	54.91	70.25	-15.34	peak

QPSK-20 MHz-High Channel- Horizontal

Frequency (MHz)	Reading (dBuV)	Correct (dB/m)	Result (dBuV/m)	Limit (dBuV/m)	Margin (dB)	Remark
6570.000	39.86	4.57	44.43	70.25	-25.82	peak
9360.000	37.17	10.64	47.81	70.25	-22.44	peak
10680.000	49.90	13.62	63.52	70.25	-6.73	peak
12705.000	35.17	18.06	53.23	70.25	-17.02	peak
14040.000	34.55	21.79	56.34	70.25	-13.91	peak
17970.000	29.79	25.51	55.30	70.25	-14.95	peak

QPSK-20 MHz-High Channel- Vertical

This report shall not be reproduced except in full, without the written approval of UL Verification Services (Guangzhou) Co., Ltd, Song Shan Lake Branch

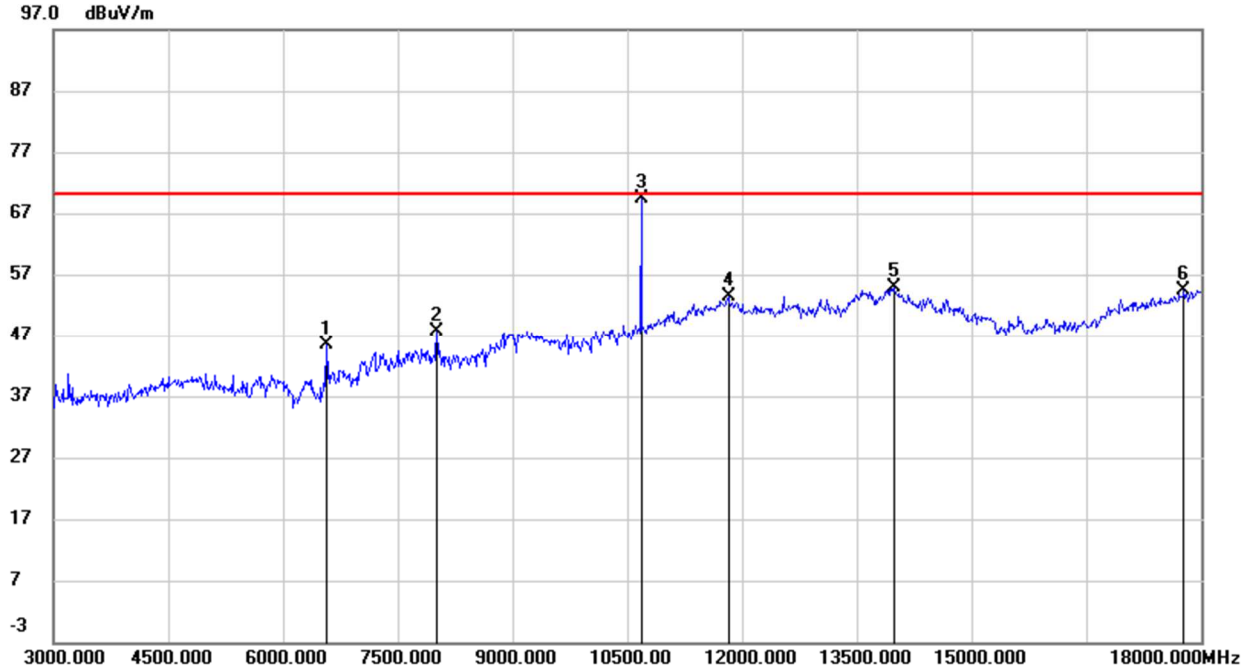

Frequency (MHz)	Reading (dBuV)	Correct (dB/m)	Result (dBuV/m)	Limit (dBuV/m)	Margin (dB)	Remark
6570.000	40.88	4.57	45.45	70.25	-24.80	peak
8010.000	41.43	6.32	47.75	70.25	-22.50	peak
10680.000	55.70	13.62	69.32	70.25	-0.93	peak
11820.000	35.91	17.47	53.38	70.25	-16.87	peak
13980.000	33.07	21.92	54.99	70.25	-15.26	peak
17775.000	30.08	24.36	54.44	70.25	-15.81	peak

Note: Limit= -25dBm+95.25=70.25 dBuV/m

END OF REPORT

This report shall not be reproduced except in full, without the written approval of UL Verification Services (Guangzhou) Co., Ltd, Song Shan Lake Branch