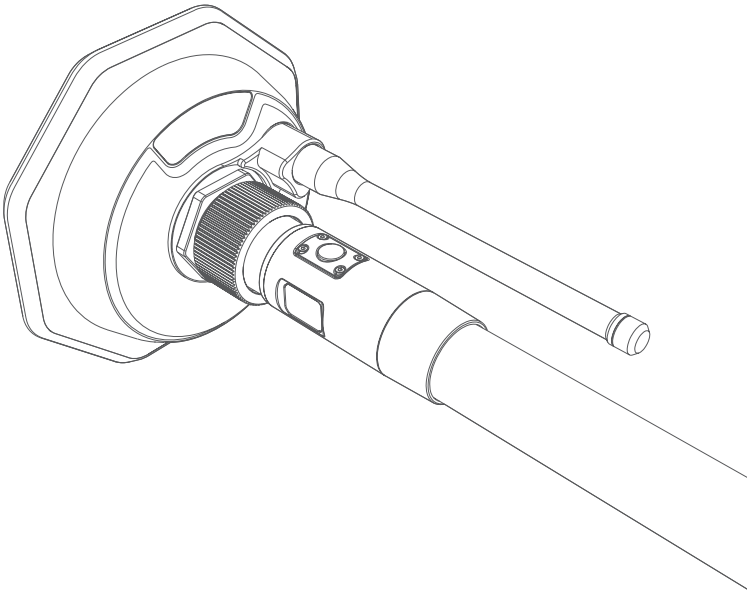

RTK Rover/Portable Base

Quick Start Guide

Version 1.3 EN

XAG 极飞科技
ADVANCING AGRICULTURE

To Users

Dear user, thank you for choosing XAG products.
For safety reasons and the best experience possible, XAG recommends that you read through the User Manual and Disclaimer in this document before attempting to use the RTK4 Rover/Portable Base.

Contact Us

If you have any questions about this document, please contact our Technical Support via email: info@xa.com

List of Items (Rover)

Before unpacking and using the product, please carefully check if it contains all the items listed below. Please contact XAG™ or your dealer if there are any missing items.
The components of the rover are packed in 2 boxes. Please refer to the following for details:

GNSS RTK
■ Module for Agriculture Use

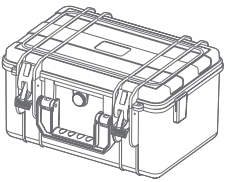

Toolkit
× 1

GNSS RTK Module for Agriculture Use (Mushroom Head)
× 1

GNSS RTK
■ Smart Battery

RTK Smart Battery (Pole)
× 1

" ■ " indicates the component is packed in box/case separately

List of Items (Portable Base)

Before unpacking and using the product, please carefully check if it contains all the items listed below. Please contact XAG™ or your dealer if there are any missing items.
The components of the portable base are packed in 4 boxes. Please refer to the following for details:

GNSS RTK
■ Module for Agriculture Use

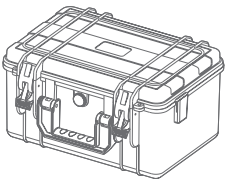

Toolkit
× 1

GNSS RTK Module for Agriculture Use (Mushroom Head)
× 1

GNSS RTK
■ Smart Battery

RTK Smart Battery (Pole)
× 1

GNSS RTK
Extension Package

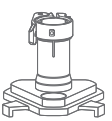

■ Triangle Stand
× 1

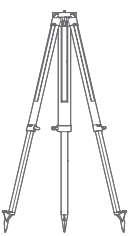

■ Tripod
× 1

" ■ " indicates the component is packed in box/case separately

Getting to Know the Rover

The RTK4 Rover is comprised of the RTK Positioning Module for Agricultural Use (Mushroom Head) and RTK Smart Battery. In specific:

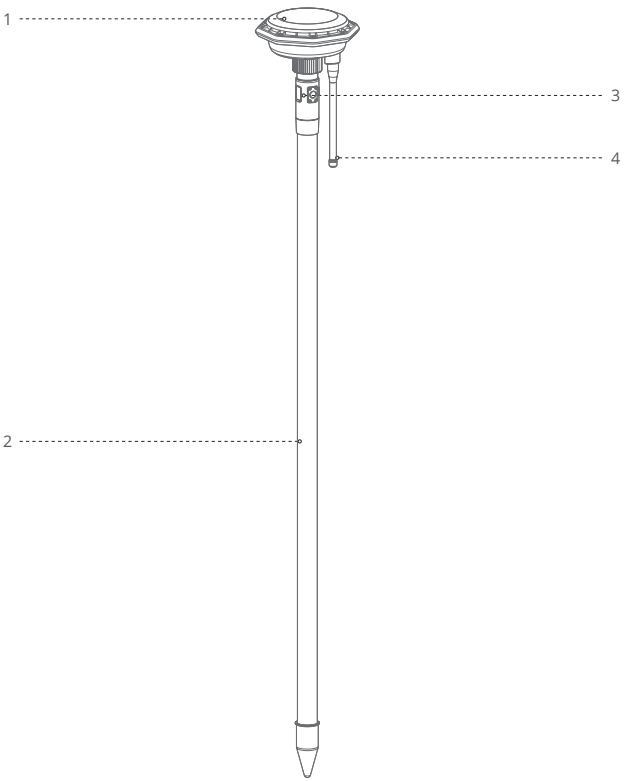

1 RTK Positioning Module for Agricultural Use (Mushroom Head)

2 RTK Smart Battery

3 RTK Smart Battery Console
including Battery Level Indicators, Power Button, Type-C Charge Port

4 Antenna

⚠ Note The RTK4 Rover and RTK4 Portable Base are the same in terms of functional definition, despite some differences in structural components.

Assembling the Rover

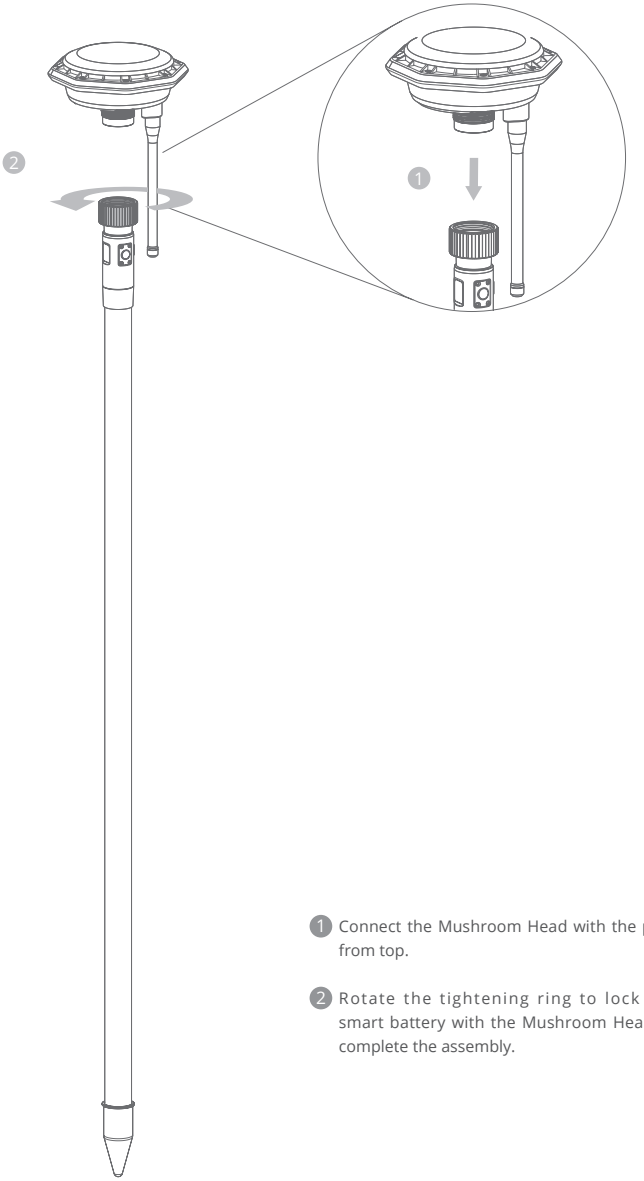

1. Connect the Mushroom Head with the pole from top.

2. Rotate the tightening ring to lock the smart battery with the Mushroom Head to complete the assembly.

Getting to Know the Portable Base

The RTK4 Portable Base is comprised of the RTK Positioning Module for Agricultural Use (Mushroom Head), RTK Smart Battery, Triangle Stand, and Tripod.

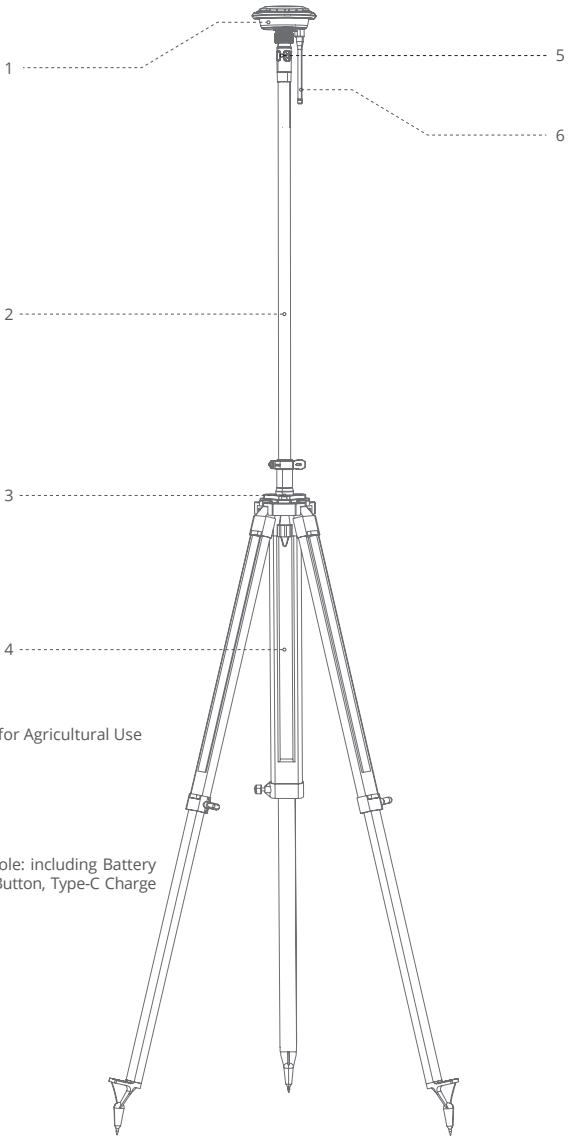

1 RTK Positioning Module for Agricultural Use (Mushroom Head)

2 RTK Smart Battery (Pole)

3 Triangle Stand

4 Tripod

5 RTK Smart Battery Console: including Battery Level Indicators, Power Button, Type-C Charge

6 Antenna

Assembling the Portable Base

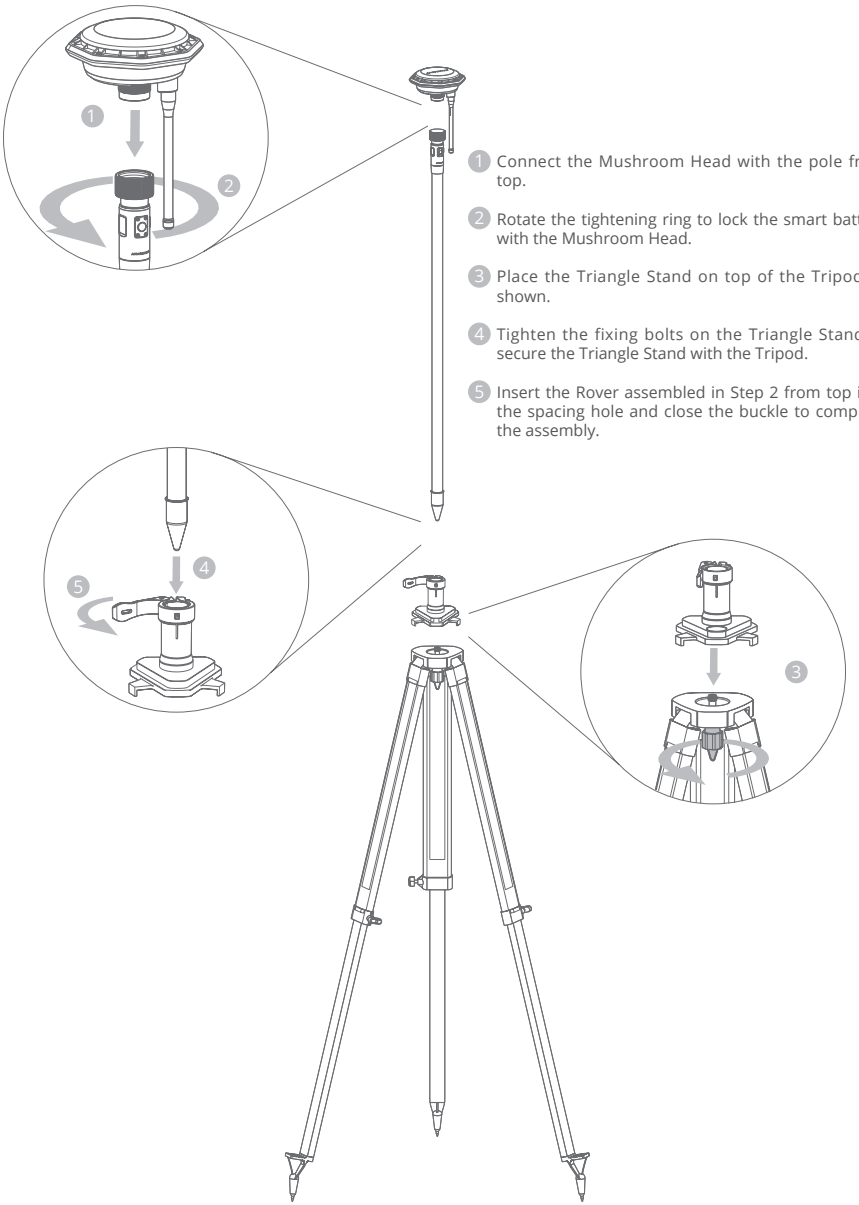

1. Connect the Mushroom Head with the pole from top.
2. Rotate the tightening ring to lock the smart battery with the Mushroom Head.
3. Place the Triangle Stand on top of the Tripod as shown.
4. Tighten the fixing bolts on the Triangle Stand to secure the Triangle Stand with the Tripod.
5. Insert the Rover assembled in Step 2 from top into the spacing hole and close the buckle to complete the assembly.

RTK Smart Battery Console

The RTK Smart Battery has a built-in 6600mAh/14.8V lithium battery. The pole is integrated with a battery level/status display panel (see right figure), a power button, and a Type-C charge port.
The functions of the button/indicator lights are defined as follows:

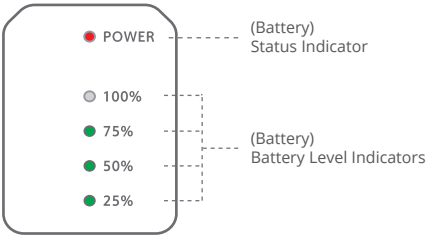

• Battery ON/OFF

ON: The battery will be powered on after 2 long presses. When the battery is OFF, press and hold the power button for at least 1 second, and release the button after all battery level indicator lights flash at the same time, then press and hold the button for at least 1 second again until the status indicator is on. This indicates that the battery has been powered on successfully.

OFF: The battery will be powered off after 2 long presses. When the battery is ON, press and hold the power button for at least 1 second, and release the button after all battery level indicator lights flash at the same time, then press and hold the button for at least 1 second again until the status indicator is off. This indicates that the battery has been powered off successfully.

•Checking Battery Level (Green)

When the battery is ON, see the battery level indicators for the battery level.
When the battery is OFF, press the power button once to display the battery level. Battery levels are defined as follows:

Battery Level LED					Battery Level
1 LIGHT FLASH	✱	○	○	○	0%-9%
1 GREEN LIGHT ON	●	○	○	○	10% -25%
2 GREEN LIGHT ON	●	●	○	○	26% -50%
3 GREEN LIGHT ON	●	●	●	○	51% -75%
4 GREEN LIGHT ON	●	●	●	●	76%-100%

•Checking Battery Status (Red Power Indicator)

Once the battery is ON, its status will be displayed on the console. Battery statuses are defined as follows:

Battery Level LED	Status
RED LIGHT ON	Normal
RED QUICK FLASH	PCB Overheated
RED SLOW FLASH	PCB Low Temperature
RED DOUBLE FLASH	Battery Malfunction. Please contact customer/technical support.

•Charging Battery

The battery can be charged when it is either ON* or OFF. During the battery charging, the battery level indicators corresponding to the current battery level will be on, while the rest lights will flash in series, indicating that the battery is being charged. After charging is completed, all battery level indicators will be on.

⚠ Warning The battery must be charged with the charging devices designated by XAG. The user shall bear the responsibility for all the consequences caused by the use of the charging devices not designated by XAG.

*Charging while the RTK is turned on may result in slow charging or power loss. It is recommended to charge when the RTK is powered off.

Charge via the Type-C port.

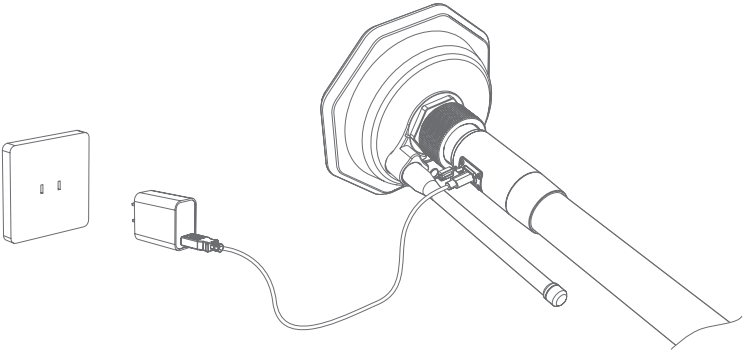

Console of the RTK Positioning Module

The Console of RTK Positioning Module for Agricultural Use is composed of three function buttons and three corresponding indicator lights in different colors (see right figure).
The functions of the button/indicator lights are defined as follows:

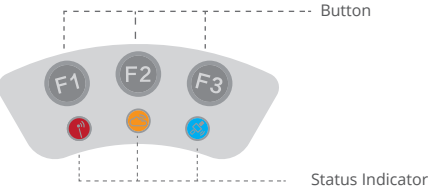

• Checking Operation Status

Battery Level LED	Warning/Alert	Status
RED LIGHT ON		Normal
RED SLOW FLASH		WLAN under initialization (about 30 seconds).
RED QUICK FLASH	Beep	Voltage lower than 12.5V (Immediate charging required; when the voltage is higher than 13.5V, the red light resumes and the alert stops).

• Checking Network Status

Battery Level LED	Status
YELLOW SINGLE FLASH	Not connected
YELLOW DOUBLE FLASH	Connected
YELLOW LIGHT ON	Connected, but no available fixed base nearby (Automatic switch to 24-hour self-capturing point).

• Checking Positioning Status

Battery Level LED	Status
BLUE LIGHT OFF	Not connected
BLUE LIGHT ON	RTK
BLUE SINGLE FLASH	Single
BLUE DOUBLE FLASH	Float
BLUE TRIPLE FLASH	Fix

• Checking/Setting Working Mode

Press and hold F1 to enter Wi-Fi AP Hotspot mode with flashing light. A shared network named “XBASE + Serial Number” will be found with a default password 20070401.

Press and hold F3 to enter Add Device mode with simultaneous flashing red, yellow and blue. With a device being added or if a device fails to be added within one minute, you will exit Add Device mode.

• Buzzer Alert

When the difference between the coordinates manually entered and the actual coordinates is more than 8 meters, the buzzer sends an alert.
When the voltage is lower than 12.5V, the buzzer sends an alert. The alert will be stopped when the voltage rises to 13.5V or above.

• Activating BOOT Mode

1: When the module is OFF, press and hold F3 to power on*.

2: If the buzzer beeps for three times, then the red light flashes slowly for 30 seconds (WLAN initialization) before flashing quickly, and the remaining indicators are off (see figure on right), it means BOOT mode is activated. Otherwise, BOOT mode is not activated.

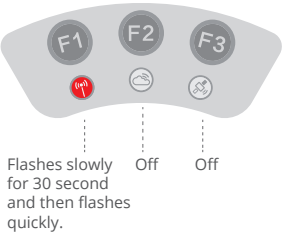

• Activating WLAN Pairing Mode

Turn on the module, when the red right (corresponding to F1) is on, press and hold F2 for at least 3 seconds and release after hearing a beep. If the red and blue lights are off and yellow light flashes twice, it means the Mushroom Head has started pairing. Upon successful pairing, the module will automatically exit the pairing mode and start normal operation.

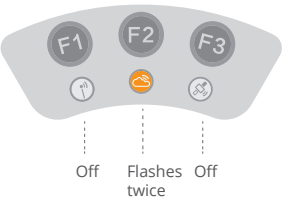

• Reset

Press F2 and F3 at the same time when powered on and release after hearing a beep. After around 8 seconds, the Mushroom Head automatically restarts and the factory default settings are restored.

• Setting up Portable Base

1. Location Selection
Select solid and flat ground with open space above. There should be no obstacles over the elevation angle of 15° for continuous tracking and observation of the satellite and high quality satellite signals.

2. Mounting
Erect the Tripod and align as per the operation standard for the RTK base. Connect the Mushroom Head to the Tripod's connecting rod, turn on the power, and secure the connecting rod.

① Fix Tripod: Mount the Tripod to the Triangle Stand and secure. Note: When there is no datum mark, make sure the Tripod is in firm contact with the ground. The height of the Tripod can be changed as needed, preferably 1.5m or higher.
② Erect the Tripod and keep the level bubble centered.
③ Connect the extension rod corresponding to the Mushroom Head and turn on the power.
④ Fix the Mushroom Head on the Tripod to complete the setup of the hardware equipment of the Portable Base.

3. System Settings
After the base is paired, click "Base Settings", set the RTK device as a portable base, and select the way to obtain coordinates. Ways to obtain coordinates include low-precision capturing, high-precision capturing, and manual input.
(1) Low-precision Capturing
Click Low-precision Capturing, and the device starts capturing coordinates automatically. After the signal becomes stable, the Mushroom Head will be automatically set as a portable base. There may be a margin of error between the coordinates captured with low precision and the actual coordinates.
(2) High-precision Capturing
High-precision Capturing performs differential positioning with the RTCM signals from a fixed base that has been set up to obtain accurate coordinates. How to operate:
Click High-precision Capturing (base assistance), and the base searches for fixed bases within 70 km via network signals. Select a desirable fixed base as your supporting base and click OK. When the parameter "Positioning" on home page displays FIX, the base is set up.
(3) Manual Input
This mode is suitable for the setup of a second base. To set up a second base at the fixed point that has been surveyed before, input the coordinates captured during the first setup into the device, and the device will automatically generate and broadcast RTCM data. How to operate:
Click Manual Input and enter the exact coordinates into the pop-up window;
Click OK and when the parameter "Positioning" on home page displays FIX, the base is set up.

* Turn on: refers to the smart battery, see page 10 for details.

Technical Specifications

RTK Positioning Module for Agricultural Use

Model: XRTK4
Dimensions: Diameter × Height: 154×83.6 mm (machine)
Diameter × Height: 154×1230 mm
(machine + battery)
Weight: ＜1.5 Kg (machine)
Port/Panel: Button × 3, Positioning Indicator × 1
Networking Indicator × 1, Power Indicator × 1
Protection Grade: IP65
Operating Temperature: -20° - 60° C
Storage Temperature: -20° - 60° C
Relative Humidity: 100%, condensation

GNSS Performance & Specifications

Signal tracking
BDS: B1I/B2I/B3C/B2a
GPS: L1/L2/L2C
GLONASS: L1/L2
Galileo: E1/E5a/E5b
RTK positioning precision
Horizontal: ±10mm+1ppm (RMS)
Vertical: ±15mm+1ppm (RMS)
Initialization time: Typical <10 seconds
Initialization reliability: >99.9%
Data update rate: 1 Hz (raw data)
1 Hz (positioning data)

Communication Interface

1 CAN port;
3 mobile communication modules (2G/3G/4G);
1 dedicated 2.4GHz WLAN.

Communication Performance

Mobile communication network
Communication modules: 2G/3G/4G
4G Operating Frequency：LTE
CE: B1\B3\B7\B8\B20\B28\B38\B40
FCC: B2\B4\B5\B7\B12\B13\B25\B26\B38\B41
KCC: B1\B3\B5\B7\B8
3G Operating Frequency
CE: WCDMA B8; WCDMA B19;
FCC: WCDMA B4; WCDMA B2
KCC: WCDMA B1
2G Operating Frequency
CE: GSM 900/DCS1800MHZ
FCC: GSM 850/PCS1900MHZ

Dedicated 2.4GHz WLAN
Antenna Gain: 2dBi
Transmission performance
Frequency range: 2.400-2.4835GHz
Channel spacing: 5 MHz
Frequency error/ frequency stability: ±20 ppm
Modulation: BPSK/QPSK/16QAM/64QAM
Emission performance
RF output power: No more than 1W, subject to regional SRRC/FCC/CE standards

External Hardware Interface

Battery terminal × 1
SIM card slot × 3

External Software Interface

The communication interface between ACB1 CommBack and the machine complies with the RTK Base Data Protocol v3.1.6 of XAG RTK Product Command Protocol. The communication interface between the machine and the CORS server complies with the Networked Transport of RTCM via Internet Protocol (Ntrip).

RTK Smart Battery

Model: B498
Dimensions: Diameter × Height: 45×1166 mm
Capacity: 6600mAh 99Wh
Input: 12.0 V/1.5 A (Type-C port)
Output: 14.8V/1A
Operating temperature: -10° - 45° C
Port/Panel: Power Button × 1, Type-C Port × 1
Battery Level/Status Display Panel × 1

Disclaimer

1. Please read this document carefully before using this product. This Disclaimer has an important impact on the safe use of the product and your legitimate rights and interests. The use of the product shall be deemed as you have known, understood, acknowledged, and accepted all terms and contents of this document.

2. This product is not a toy, and is not suitable for people under the age of 18. Please keep this product away from the reach of children, and be very careful when operating in the presence of children.

3. Please install and use this product as guided by the “Product Manual/Operation Manual”. Do not modify or disassemble the product without authorization. All losses caused by the user’s unauthorized modification or disassembly of this product shall be borne by the user, while XAG does not assume any corresponding legal responsibility.

4. To the maximum extent permitted by law, XAG shall not be liable for any losses caused by users' failure to use the product in accordance with this document and the “Product Manual/Operation Manual”.

5. To the maximum extent permitted by law, XAG’s liability or amount under any circumstances to you for all damages, losses, and litigation arising therefrom will not exceed the amount paid to XAG by you for the purchase of the product.

6. In any case, the purchaser or user shall comply with relevant laws and regulations of the country and region where the product is used. XAG does not assume any liability arising from violation of relevant laws and regulations by the purchaser or user.

7. As laws in some countries may prohibit exemptions from liability clauses, your rights in different countries may vary. This does not mean that the contents of this Disclaimer are necessarily invalid.

8. To the extent permitted by law, XAG has the final right to interpret and modify the above terms. XAG has the right to update, modify, or terminate these terms through its official website, the “Product Manual/Operation Manual”, online APP and other means without prior notice.

9. It is recommended to set up the portable base station in an open area before use. Please keep it clear of obstacles and stay at least 1 meter from it to ensure that it works properly.

Warning

Users are required to read the complete “Product Manual” and be familiar with the product operations before using the product. Otherwise, it may cause serious injury to yourself or others, or cause product damage and property loss. Strong safety awareness is required to operate this product. Do not use the parts that are not provided or suggested by XAG. Please strictly follow the instructions of XAG to install and use the product.

FCC/ISEDC Compliance Notice

This device complies with Part 15 of the FCC Rules and ISEDC licence-exempt RSS standard.. Operation is subject to the following two conditions:
(1)This device may not cause harmful interference, and
(2) This device must accept any interference received,including interference that may cause undesired operation.
Any changes or modifications not expressly approved by the party responsible for compliance could void the user’s authority to operate the equipment.

Cet appareil est conforme à la section 15 du règlement de la FCC et à la norme RSS sans licence ISEDC. Son utilisation est soumise aux deux conditions suivantes:
(1) Cet appareil ne doit pas causer d’interférences nuisibles, et
(2) Cet appareil doit accepter toutes les interférences reçues, y compris celles susceptibles de provoquer un fonctionnement indésirable.
Tout changement ou modification non expressément approuvé par la partie responsable de la conformité peut annuler le droit de l'utilisateur à utiliser l'équipement.

This equipment has been tested and found to comply with the limits for a Class A digital device, pursuant to part 15 of the FCC Rules. These limits are designed to provide reasonable protection against harmful interference when the equipment is operated in a commercial environment. This equipment generates, uses and can radiate radio frequency energy and, if not installed and used in accordance with the instruction manual, may cause harmful interference to radio communications. Operation of this equipment in a residential area is likely to cause harmful interference in which case the user will be required to correct the interference at his own expense.

RF Exposure Information

Non-compliance with the above restrictions may result in violation of RF exposure guidelines. 30 www.xa.com/en Informations sur l'exposition RF L’aéronef est conforme aux limites d’exposition aux rayonnements FCC/ISEDC établies pour un environnement non contrôlé. Afin d'éviter tout risque de dépassement des limites d'exposition aux radiofréquences FCC/ISEDC, la proximité humaine de l'antenne ne doit pas être inférieure à 20 cm en fonctionnement normal.

“The device meets RF exposure guidelines when used against the head or when positioned at least 20cm away from the body. When a carry case, belt clip or other form of device holder is used for body-worn operation, it should not contain metal and should provide at least the above stated separation distance from the body.”

Le non-respect des restrictions ci-dessus peut entraîner une violation des consignes d'exposition aux RF.

EU Compliance Statement: Guangzhou Xaircraft Technology CO.,LTD.All Rights Reserved. hereby declares that this device is in compliance with the essential requirements and other relevant provisions of the RED Directive. This equipment must be installed and operated in accordance with provide instructions and the antenna used for this transmitter must be installed to provide a separation distance of at least 20cm from all persons and must not be co-located or operation in conjunction with any other antenna or transmitter.End-users and installers must be provide with antenna installation instructions and transmitter operating conditions for satisfying RF exposure compliance.

Warning: Operation of this equipment in a residential environment could cause radio interference.

"Hereby, [*GUANGZHOU XAIRCRAFT TECHNOLOGY CO., LTD*], declares that this [*XRTK4]* is in compliance with the essential requirements and other relevant provisions of *2014/53/EU*.The full text of the EU declaration of conformity is available at the following internet address: *https://www.xa.com/en*

Suppliers Name(EU)DRONEUA AGRICULTURE EUROPE Sp. Z O.O.
Suppliers Address (EU) 21-007 Melgiew, Janowice 144 str., Poland.
Suppliers phone number and / or internet contact information(093)4575757

FCC Supplier’s Declaration of Conformity

Brand name / model number: XRTK4

This device complies with part 15 of the FCC Rules. Operation is subject to the following two conditions: (1) This device may not cause harmful interference, and (2) this device must accept any interference received, including interference that may cause undesired operation.

Suppliers Name (USA) : HOMELAND SURVEILLANCE AND ELECTRONICS LLC

Suppliers Address (USA) : 122 LIVE OAKS BLVD.CASSELBERRY, FL 32707

Suppliers phone number and / or internet contact information: 46-2381710

WiFi 802.11b/g/n(20MHz): 2412MHz to 2472MHz@17.97 dBm EIRP
WiFi 802.11b/g/n(40MHz):2422MHz to 2462MHz@17.85 dBm EIRP
2G GSM GSM 900:880MHz to 915MHz,925MHz to 960MHz@25.81dBm EIRP
2G GSM GSM 1800: 1710MHz to1785MHz,1805MHz to 1880MHz@22.81 dBm EIRP
3G WCDMA Band I:1920MHz to1980MHz,21105MHz to 2170MHz@25 dBm(E.I.R.P)
3G WCDMA Band VIII: 880MHz to 915MHz, 925MHz to 960MHz@25 dBm(E.I.R.P)
4G LTE FDD Band 1 1920-1980MHz, 2110-2170MHz @25 dBm(E.I.R.P)
4G LTE FDD Band 3 1710-1785MHz, 1805-1880MHz @25 dBm(E.I.R.P)
4G LTE FDD Band 7 2500-2570MHz, 2620-2690MHz @ 25 dBm(E.I.R.P)
4G LTE FDD Band 8 880-915MHz, 925-960MHz@25 dBm(E.I.R.P)
4G LTE FDD Band 20 832-862MHz, 791-821MHz@25 dBm(E.I.R.P)
4G LTE FDD Band 28 703-736MHz,758-791MHz@25 dBm(E.I.R.P)
4G LTE TDD Band 38: 2570-2620MHz@25 dBm(E.I.R.P)
4G LTE TDD Band 38: 2300-2400MHz@25 dBm(E.I.R.P)
GNSS GPS(L1): 1575.42MHz
GNSS GPS(L2): 1227.6MHz
GNSS BDS(B1): 1561.098MHz
GNSS BDS(B2): 1207.14MHz
GNSS GLONASS(G1): 1602MHz
GNSS GLONASS(G2): 1246MHz
GNSS Galileo(E1): 1575.42MHz
Galileo(E5b): 1207.14MHz

info@xa.com
@XAGofficial
@XAG_official
@XAG Official

XAG 极飞科技 ADVANCING AGRICULTURE

This Manual is subject to upgrade without prior notice.

©Guangzhou Xaircraft Technology CO.,LTD.All Rights Reserved.
All information of this User Manual (including but not limited to any text description, illustrations, photos, methods and processes, etc.) belongs to XAG Co., Ltd. and is protected by copyright law. Without written authorization, no individual or institution is allowed to reproduce, extract, translate, distribute, or otherwise reproduce or quote any content hereof.