BIG DOG™

PR-R13PI

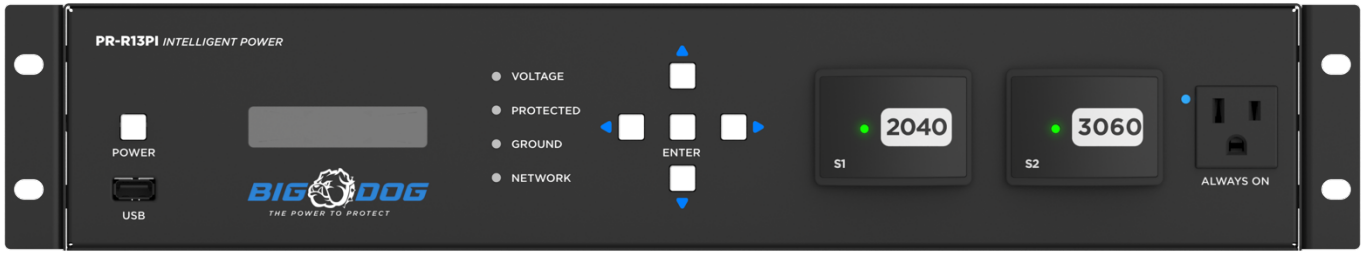

MAVbase™

TAKE CONTROL

INTRODUCTION

Thank you for purchasing the PR-R13PI. Your new Power Distribution Unit (PDU) by Big Dog Power provides filtered AC power to your equipment. 12 individually controlled outlets provide up to 5100 Joules of surge Protection. Wi-Fi and Wired LAN connections give flexibility with placement and network connectivity. The built in Self-Healing functions of the PR-R13PI will keep your network connected equipment going by automatically resetting the power going to the outlet.

Features

- 12 individually controlled outlets
- 1 always on Front outlet
- Rack Mountable 2U
- Self-Healing functions for network connected equipment
- Surge Mileage: Track when a Surge Event happens and the remaining health of the surge protection
- Replaceable Surge modules
- 2040 and 3060 Joule surge protection
- Temperature monitoring with 4 thermostats
- Web and Mobile app for remote management and notification
- I/O for additional integrations
- RS-232/Serial and IP automation integration
- Grounding Lug
- 120V/12A Rating

Anatomy

A. Configurable Power Button
B. LCD Display
C. Display Navigation Buttons
D. Replaceable Surge Modules
    a. S1 – 2040 Joule Rating
    b. S2 – 3060 Joule Rating
E. USB Power Supply
    a. 2.4 amp 5v
F. At a glance status LEDs
    a. See LED functions for more information
G. Always On Service Outlet
H. 12 Individually controlled Outlets
I. Grounding pin
J. 15-amp Circuit Breaker
K. Ethernet Port
L. Wi-Fi Antenna
M. Outlet Status LEDs
    a. See LED functions for more information
N. IEC Power Input 120v
O. Thermistor Inputs
P. UPS Link
    a. For Future Use
Q. I/O
    a. 1x Contact Sensor Input
    b. 1x Relay Output
R. Surface Mount Location for Rack Ears
S. 2U Rack Ears

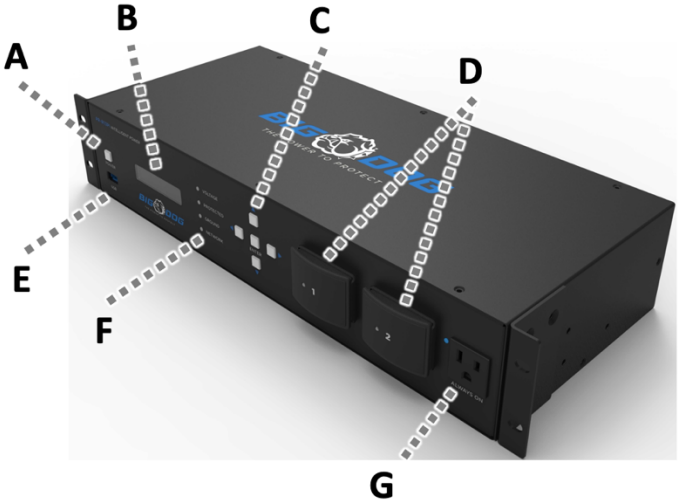

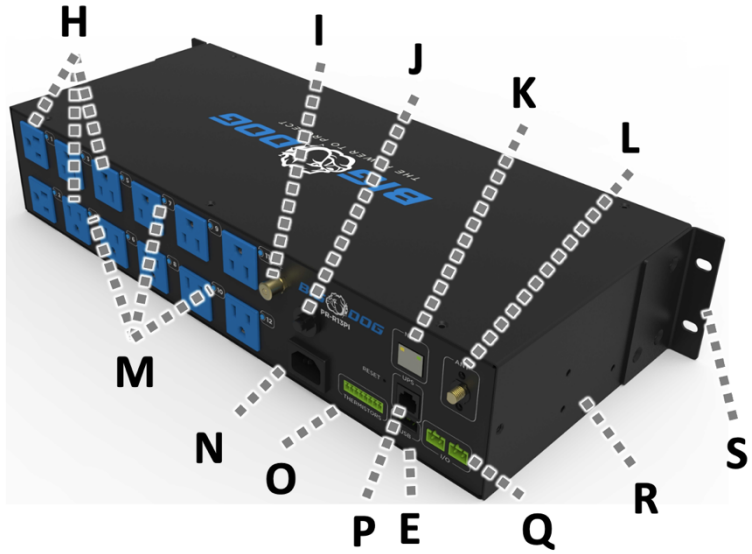

LED Indicators

"G" or Ground	On: PDU is grounded properly Off: PDU is not grounded
"P" or Power	Blue: Good / Protected and Clean power Red: Bad, No Protection
"N" or Network	Blinking Red: No Network Connection Solid Blue: Good Network Connection Rapid Blinking Red: PDU failure requires reboot or reset
Outlet Status	On: Outlet is On Off: Outlet is Off
VOLTAGE	Solid Blue: Normal/Good Voltage Solid Red: Over / Under Voltage
Always On	On: Outlet is on Off: Outlet is Off
Surge Module S1 and S2 LED	On: Good / Protected Off: Bad / Not protected

INSTALLATION

Rack Mount

Step 1) Use the included screws to attach the Rack Mount ears to the PDU near the face of the PDU
Step 2) Slide the PDU into the rack where you intend to mount it
Step 3) Secure the PDU using the appropriate screws for your rack

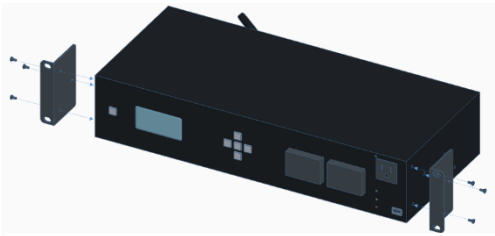

Step 2 Rack Mount

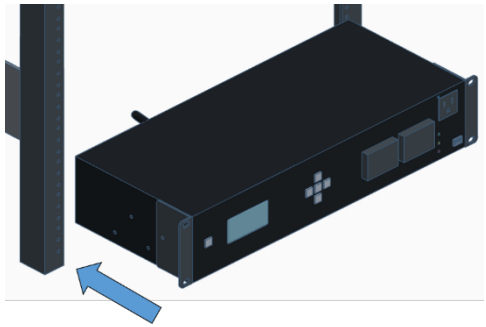

Step 1 Rack Mount

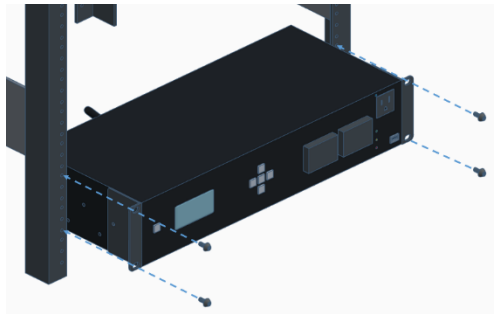

Step 3 Rack Mount

Surface Mount

Step 1) Use the included screws to attach the included Rack Mount ears to PDU at the secondary location

a) You can find the secondary mount holes halfway towards the back of the PDU

Step 2) Install appropriate surface mount screws (not included) through the Rack Mount ears into the desired surface

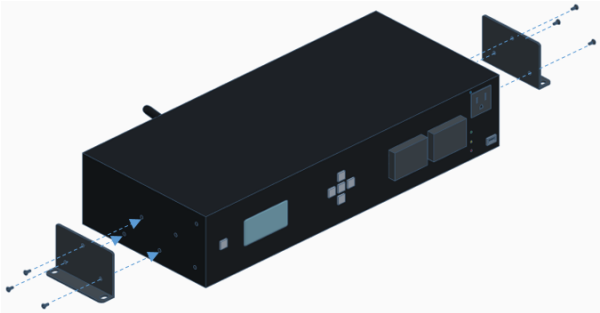

Surface Mount Step 1

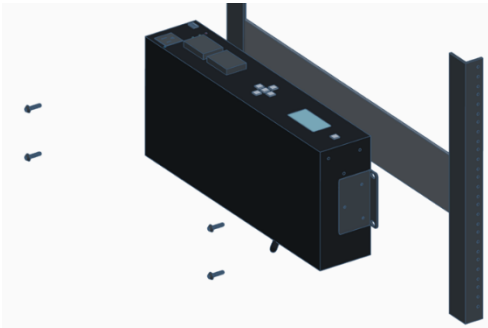

Surface Mount Step 2

Shelf Mount

Step 1) Remove the protective film over the adhesive on the included Rubber Feet

Step 2) Apply the Rubber feet to the bottom of the PDU

Step 3) Slide the PDU onto shelf

Step 4) Place PDU on Shelf

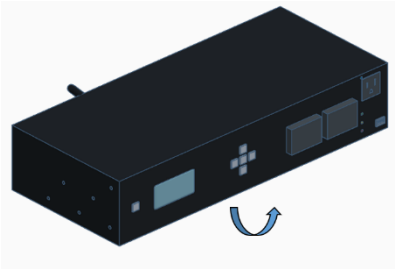

Shelf Mount Step 4

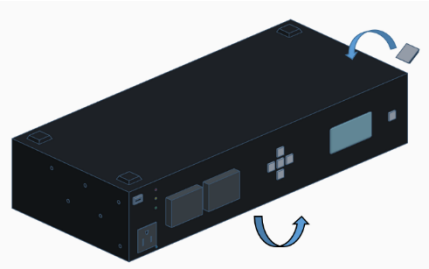

Shelf Mount Step 2

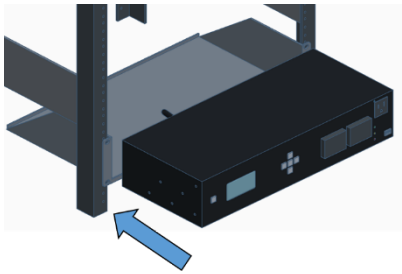

Shelf Mount Step 1

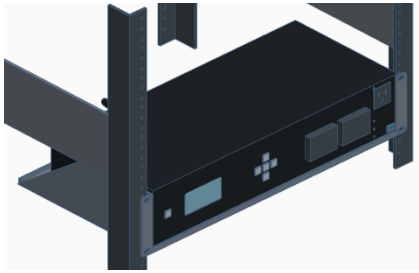

Shelf Mount Step 3

CONNECTIONS and USE

Physical Connections

Step 1) Screw in the Wi-Fi Antenna
Step 2) Plug in all to be used connections Including:
- a) Ethernet LAN
  - i) Skip the Ethernet cable if you will be using Wi-Fi
- b) Thermostats
- c) I/O
- d) Connected equipment power cables

Step 3) Insert the female end of the included 6ft power cord into the PR-R13PI
Step 4) Plug in the Male end of the included 6ft power cord into the mains outlet on your wall.

Wi-Fi Setup

If using the Wi-Fi connection, follow these instructions

Step 1) Plug in the included power cable to the PDU and to the AC mains outlet on the wall.
- a) Wait approximately 15-30 seconds, the power button will begin to flash.

Step 2) Scan for Wi-Fi on your Wi-Fi enabled device with a web browser
Step 3) Connect to the Wi-Fi SSID of the PDU
- a) The SSID of the PDU will be “Metra-xxxxxxxxxxxx” where the “x” are the MAC address or device ID of the PDU.
  - i) Verify the code of the SSID matches the MAC address of the PDU with the Sticker that is attached to the bottom of the PDU.

Step 4) In a web browser go to “192.168.4.1”
Step 5) Go to “Network”
Step 6) Click “SCAN NETWORKS”
- a) The network mode can also be changed before scanning. For ease of setup we’ll use the default DHCP settings.

Step 7) Select the desired network SSID
NOTE: the PDU requires a 2.4Ghz Wi-Fi connection.
Step 8) If required enter the password for the Wi-Fi connection
Step 9) Click “Save”
- a) The PDU will now connect and reboot. After it has rebooted it will attempt to connect to the Wi-Fi signal.

Step 10) Once the PDU has been connected to the network and has access to the web, proceed to the next steps

REPLACEABLE SURGE MODULES

REMOVE

Step 1) Firmly grasp the front top and bottom lip of the surge module
Step 2) Pull the surge module from the front of the PDU
a) A slight side to side motion may help release the surge module from the PDU

REPLACE

Step 1) Ensure the correct module is being inserted into the correct slot on the PDU
Step 2) Gently slide the surge module into the PDU until you feel resistance
Step 3) Firmly push the surge module into the PDU until you hear and feel a click
a) DO NOT: Smack the surge module into the slot

Cloud setup

Step 1) Log in to your MAVbase.com account
Step 2) Click the Add New button
a) Then click “ADD PDU”
Step 3) Add the PR-R13PI to your account using the MAC address of the PDU

Surge Protection

Protected Circuit(s)

Replaceable 5100 Total Joule Protection from the Line to Neutral to Ground circuit.

For use only with SPD Modules specified by the manufacturer.

This SPD is suitable for use only with manufacturer’s specified Cat. No. PR-RMS1 and PR-RMS2 replaceable SPD Module. Using this SPD with other than the manufacturer’s specified SPD may create a risk of fire or shock.

IMPORTANT SAFETY INSTRUCTIONS

Read and observe the following safety points at all times.

Notice

For indoor use only. Internal components are not sealed from the environment. The device can only be used in a fixed location such as a telecommunication centre, or a dedicated computer room. When you install the device, ensure that the protective earthing connection of the socket-outlet is verified by a skilled person. Suitable for installation in Information Technology Rooms to power ITE equipment such as Monitors, Computers, Etc.

Only use brackets/attachments/accessories specified by the manufacturer.

Do not place the device in an unstable position where it might fall and cause injuries. This equipment is not suitable for use in locations where children are likely to be present.

Do not cover this device with a cloth. Do not install it on a carpet or rug.

Caution – Potential injury

Do not use this product with extension cords, multioutlet power strips, multioutlet extenders, or UPS devices (other than a Big Dog Power UPS). The power capacity of these accessories can be overloaded by this product and may result in a risk of fire, or property damage.

Warning – Power sources, grounding, polarization

This plug is designed to be inserted into a NEMA 5-15 (three-prong grounded) outlet only. Do not force the plug into an outlet that is not designed to accept it. Never dismantle the plug or to alter the power cord, and do not attempt to defeat the grounding feature by using a 3-to-2 prong adapter. If you have questions about grounding, consult your local power company or a qualified electrician.

This PDU requires a properly grounded outlet for safety. If you're not sure if your home's electrical wiring is properly grounded, have it checked by a qualified electrician.

If a rooftop device such as a satellite dish connects to the PDU, ensure that the device's wires are also properly grounded.

Warning – Liquid: avoiding electrical shocks

Do not operate the PDU if liquid of any kind is spilled onto or inside the unit. Do not operate it near rain or water, even water that is contained (for example, bathtub or sink).

Warning – Power cord safety

Do not place the power cord near areas with heavy foot traffic (for example, hallways). Do not create a trip hazard with the power cord.

If the power cord's protective jacket rips or frays, exposing the internal wiring or shielding, disconnect it from the power source and replace the power cord immediately. See the warranty section of the owner's manual for details.

Warning – No user-serviceable parts inside

If the PDU is not operating properly, do not remove any part of the unit (cover, etc.) for repair. Unplug the unit and consult the warranty section of the owner's manual.

Caution – Exposure to heat

Do not expose the PDU to direct sunlight or place it near wall heaters, space heaters, or in an enclosed space prone to temperature increase.

Do not use the device in a confined, poorly-ventilated location; this can overheat the unit, possibly even causing a fire. If used in a small space other than an EIA-standard rack, ensure that there is adequate space around the device.

Caution – Proper cleaning

In general, the only cleaning necessary for is a light dusting. Unplug the PDU from the wall outlet before cleaning it. Do not use liquid or aerosol cleaners.

FCC WARNING

WARNING!! Changes or modifications to this unit not expressly approved by the party responsible for compliance could void the user's authority to operate the equipment.

This equipment has been tested and found to comply with the limits for a Class B Digital Device, pursuant to Part 15 of the FCC Rules. These limits are designed to provide reasonable protection against harmful interference in residential installation. This equipment generates, uses and can radiate radio frequency energy and, if not installed and used in accordance with the instruction manual, may cause harmful interference to radio communications. However, there is no guarantee that interference will not occur in a particular installation. If this equipment does cause harmful interference to radio or television reception, which can be determined by turning the equipment off and on, the user is encouraged to try to correct the interference by one or more of the following measures:

- Reorient or relocate the receiving antenna.
- Increase the separation between the equipment and receiver.
- Connect the equipment into an outlet on a circuit different from that to which the receiver is connected.
- Consult the dealer or an experienced radio/TV technician for help.

Notice: (1) An unshielded-type power cord is required in order to meet FCC emission limits and also to prevent interference to the nearby radio and television reception. It is essential that only the supplied power cord by used. (2) Use only shielded cables to connect I/O devices to this equipment.

Note: THE MANUFACTURER IS NOT RESPONSIBLE FOR ANY RADIO OR TV INTERFERENCE CAUSED BY UNAUTHORIZED MODIFICATIONS TO THIS EQUIPMENT. SUCH MODIFICATIONS COULD VOID THE USER'S AUTHORITY TO OPERATE THE EQUIPMENT.

The Class B digital apparatus meets all requirements of the Canadian Interference-Causing Equipment Regulation.

Cet appareil numerique de la class B respecte toutes les exigencies du Reglement sur le materiel brouilleur du Canada.

FCC Part15C+RSS247

To assure continued FCC compliance:

1. Any changes or modifications not expressly approved by the grantee of this device could void the user's authority to operate the equipment.

2. This equipment complies with FCC radiation exposure limits set forth for an uncontrolled environment. This equipment should be installed and operated with minimum distance 20cm between the radiator & your body.

This radio transmitter [27941-PRR13PI] has been approved by Innovation, Science and Economic Development Canada to operate with the antenna types listed below, with the maximum permissible gain indicated. Antenna types not included in this list that have a gain greater than the maximum gain indicated for any type listed are strictly prohibited for use with this device.

NO.	Antenna Type	Model Name	Gain (Peak)
1.	Dipole	Q0211	2 dBi

IC

This device complies with Industry Canada license-exempt RSS standard(s). Operation is subject to the following two conditions: (1) this device may not cause interference, and (2) this device must accept any interference, including interference that may cause undesired operation of the device.

This equipment complies with IC radiation exposure limits set forth for an uncontrolled environment. This equipment should be installed and operated with minimum distance 20cm between the radiator and your body.

French:

Cet appareil radio est conforme au CNR-247d'Industrie Canada. L'utilisation de ce dispositif est autorisée seulement aux deux conditions suivantes : (1) il ne doit pas produire de brouillage, et (2) l'utilisateur du dispositif doit être prêt à accepter tout brouillage radioélectrique reçu, même si ce brouillage est susceptible de compromettre le fonctionnement du dispositif.

Cet équipement est conforme aux limites d'exposition aux rayonnements IC établies pour un environnement non contrôlé. Cet équipement doit être installé et utilisé avec un minimum de 20 cm de distance entre la source de rayonnement et votre corps.

© Copyright 2022 Ethereal Home Theater, LLC.

The information contained herein is subject to change without notice. This document contains proprietary information protected by copyright law. No part of this document may be photocopied or reproduced without prior written consent.

metrahometheater.com

metraav.com

MAVBase.com

386-255-0234