RF Exposure Report

Report No.: AGC11758250822FH01

FCC ID	:	2A482-C0013N
APPLICATION PURPOSE	:	Original Equipment
PRODUCT DESIGNATION	:	Baseus PrimeTrip VC2 Pro Cooling Magnetic Wireless Charging Car Mount Qi2.2
BRAND NAME	:	baseus
MODEL NAME	:	C0013N
APPLICANT	:	Shenzhen Baseus Technology Co., Ltd.
DATE OF ISSUE	:	Sep. 28, 2025
STANDARD(S)	:	47 CFR FCC Part 2.1091 KDB 680106 D01 v04
REPORT VERSION	:	V1.0

Attestation of ***G***lobal ***C***ompliance (Shenzhen) Co., Ltd

Any report having not been signed by authorized approver, or having been altered without authorization, or having not been stamped by the "Dedicated Testing/Inspection Stamp" is deemed to be invalid. Copying or excerpting portion of, or altering the content of the report is not permitted without the written authorization of AGC. The test results presented in the report apply only to the tested sample. Any objections to report issued by AGC should be submitted to AGC within 15days after the issuance of the test report. Further enquiry of validity or verification of the test report should be addressed to AGC by agc01@agccert.com.

Attestation of Global Compliance(Shenzhen)Co., Ltd
Attestation of Global Compliance(Shenzhen)Std & Tech Co., Ltd
Tel: +86-755 2523 4088 E-mail: agc@agccert.com Web: http://www.agccert.com/

Report Revise Record

Report Version	Revise Time	Issued Date	Valid Version	Notes
V1.0	/	Sep. 28, 2025	Valid	Initial Release

Any report having not been signed by authorized approver, or having been altered without authorization, or having not been stamped by the "Dedicated Testing/Inspection Stamp" is deemed to be invalid. Copying or excerpting portion of, or altering the content of the report is not permitted without the written authorization of AGC. The test results presented in the report apply only to the tested sample. Any objections to report issued by AGC should be submitted to AGC within 15days after the issuance of the test report. Further enquiry of validity or verification of the test report should be addressed to AGC by agc01@agccert.com.

Table of Contents

1. General Information **4**
2. Product Information **5**
2.1 Product Technical Description 5
2.2 DUT Coil and Size Information 5
2.3 Related Submittal(S)/Grant (S) 6
2.4 Test Methodology 6
2.5 Equipment Approval Considerations 6
3. Test Environment **7**
3.1 Address of The Test Laboratory 7
3.2 Test Facility 7
3.3 Environmental Conditions 8
3.4 Measurement Uncertainty 8
3.5 List of Equipment Used 8
4.System Test Configuration **9**
4.1 Configuration of Tested System 9
4.2 Equipment Used in Tested System 9
5. Description of Test Modes **10**
6. Maximum Permissible Exposure **11**
6.1 Test Limits 11
6.2 Test Setup (Block Diagram of Configuration) 12
6.3 Test Procedures 13
6.4 Test Result 15
Appendix I: Photographs of Test Setup **16**
Appendix II: Photographs of Test EUT **16**

Any report having not been signed by authorized approver, or having been altered without authorization, or having not been stamped by the "Dedicated Testing/Inspection Stamp" is deemed to be invalid. Copying or excerpting portion of, or altering the content of the report is not permitted without the written authorization of AGC. The test results presented in the report apply only to the tested sample. Any objections to report issued by AGC should be submitted to AGC within 15days after the issuance of the test report. Further enquiry of validity or verification of the test report should be addressed to AGC by agc01@agccert.com.

1. General Information

Applicant	Shenzhen Baseus Technology Co., Ltd.
Address	2nd Floor, Building B, Baseus Intelligence Park, No.2008, Xuegang Rd, Gangtou Community, Bantian Street, Longgang District, Shenzhen, China
Manufacturer	Shenzhen Baseus Technology Co., Ltd.
Address	2nd Floor, Building B, Baseus Intelligence Park, No.2008, Xuegang Rd, Gangtou Community, Bantian Street, Longgang District, Shenzhen, China
Factory	N/A
Address	N/A
Product Designation	Baseus PrimeTrip VC2 Pro Cooling Magnetic Wireless Charging Car Mount Qi2.2
Brand Name	baseus
Test Model	C0013N
Series Model(s)	N/A
Difference Description	N/A
Date of receipt of test item	Aug. 14, 2025
Date of Test	Aug. 14, 2025~Sep. 22, 2025
Deviation from Standard	No any deviation from the test method
Condition of Test Sample	Normal
Test Result	Pass
Test Report Form No	AGCER-FCC-RFE-V1

Note: The test results of this report relate only to the tested sample identified in this report.

Prepared By	Jack Gui (Project Engineer)	Sep. 28, 2025
Reviewed By	Bibo Zhang (Reviewer)	Sep. 28, 2025
Approved By	Angela Li (Authorized Officer)	Sep. 28, 2025

Any report having not been signed by authorized approver, or having been altered without authorization, or having not been stamped by the "Dedicated Testing/Inspection Stamp" is deemed to be invalid. Copying or excerpting portion of, or altering the content of the report is not permitted without the written authorization of AGC. The test results presented in the report apply only to the tested sample. Any objections to report issued by AGC should be submitted to AGC within 15days after the issuance of the test report. Further enquiry of validity or verification of the test report should be addressed to AGC by agc01@agccert.com.

2. Product Information

2.1 Product Technical Description

Operation Frequency Band	110.5kHz-148.5kHz; 360kHz±5kHz
Hardware Version	V1.0
Software Version	V1.0
Modulation Type	ASK
Antenna Designation	Coil Antenna
Input Rating	DC 5V 3A; DC 9V 3A; DC 15V 3A by car charger
Output Rating	5W/7.5W/10W/15W/25W Max

2.2 DUT Coil and Size Information

WPT Band I For Phone	
Output Power for Each Coil	5W/7.5W/10W/15W/25W Max
Distance to transmitter:	Top: 2.0mm;Bottom: 18.5mm;Left: 24.5mm;Right: 24.5mm;Front:24.5mm Rear: 24.5mm
DUT Size	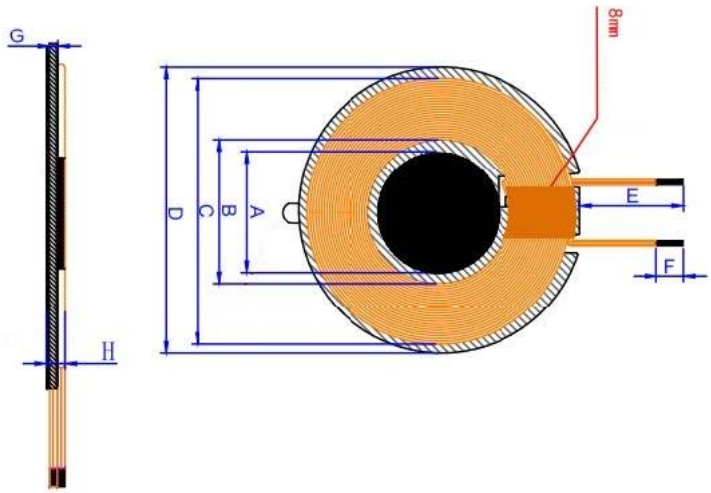
Unit: mm	

A	B	C	D	E	F	G	H
20±1	20.5±0.5	39±1	43.2±0.5	8±1	3.5±1.5	0.8±0.2	2.3Max

Remark: The information above are provided by the manufacturer. More detailed feature of the EUT please refers to the user manual.

Any report having not been signed by authorized approver, or having been altered without authorization, or having not been stamped by the "Dedicated Testing/Inspection Stamp" is deemed to be invalid. Copying or excerpting portion of, or altering the content of the report is not permitted without the written authorization of AGC. The test results presented in the report apply only to the tested sample. Any objections to report issued by AGC should be submitted to AGC within 15days after the issuance of the test report. Further enquiry of validity or verification of the test report should be addressed to AGC by agc01@agccert.com.

2.3 Related Submittal(S)/Grant (S)

This submittal(s) (test report) is intended for **FCC ID: 2A482-C0013N**, filing to comply with Part 2.1091&2.1093 of the Federal Communication Commission rules.

2.4 Test Methodology

The tests were performed according to following standards:

No.	Identity	Document Title
1	FCC 47 CFR Part 2.1091	Radiofrequency Radiation Exposure Evaluation: Mobile Devices.
2	FCC 47 CFR Part 2.1093	Radiofrequency Radiation Exposure Evaluation: Portable Devices.
3	KDB 680106	D01 RF Exposure Wireless Charging Base App v04

2.5 Equipment Approval Considerations

No.	Requirements	Conditions of the EUT
1	WPT operating frequency (or frequencies).	110.5kHz-148.5kHz; 360kHz±5kHz
2	Number of radiating structure (Coil)	1 Coil
3	Conducted Power for each radiating structure	5W/7.5W/10W/15W/25W Max
4	§2.1091-Mobile or §2.1093-Portable demonstrated scenarios of operation, including RF exposure compliance information	Mobile Device
5	Maximum distance from the WPT transmitter at which, by design, a load can be charged (including slow-charging operations)	Charging with the load contact directly

Any report having not been signed by authorized approver, or having been altered without authorization, or having not been stamped by the "Dedicated Testing/Inspection Stamp" is deemed to be invalid. Copying or excerpting portion of, or altering the content of the report is not permitted without the written authorization of AGC. The test results presented in the report apply only to the tested sample. Any objections to report issued by AGC should be submitted to AGC within 15days after the issuance of the test report. Further enquiry of validity or verification of the test report should be addressed to AGC by agc01@agccert.com.

3. Test Environment

3.1 Address of The Test Laboratory

Laboratory: Attestation of Global Compliance (Shenzhen) Co., Ltd.

Address: 1-2/F, Building 19, Junfeng Industrial Park, Chongqing Road, Heping Community, Fuhai Street, Bao'an District, Shenzhen, Guangdong, China

3.2 Test Facility

The test facility is recognized, certified, or accredited by the following organizations:

CNAS-Lab Code: L5488

Attestation of Global Compliance (Shenzhen) Co., Ltd. has been assessed and proved to follow CNAS-CL01 Accreditation Criteria for Testing and Calibration Laboratories (identical to ISO/IEC17025: 2017 General Requirements for the Competence of Testing and Calibration Laboratories.)

A2LA-Lab Cert. No.: 5054.02

Attestation of Global Compliance (Shenzhen) Co., Ltd. EMC Laboratory has been accredited by A2LA for technical competence in the field of electrical testing, and proved to follow ISO/IEC 17025: 2017 General Requirements for the Competence of Testing and Calibration Laboratories and any additional program requirements in the identified field of testing.

FCC-Registration No.: 975832

Attestation of Global Compliance (Shenzhen) Co., Ltd. EMC Laboratory has been registered and fully described in a report filed with the FCC (Federal Communications Commission). The acceptance letter from the FCC is maintained in our files with Registration 975832.

IC-Registration No.: 24842(CAB identifier: CN0063)

Attestation of Global Compliance (Shenzhen) Co., Ltd. EMC Laboratory has been registered and fully described in a report filed with the Certification and Engineering Bureau of Industry Canada. The acceptance letter from the IC is maintained in our files with Registration 24842.

Any report having not been signed by authorized approver, or having been altered without authorization, or having not been stamped by the "Dedicated Testing/Inspection Stamp" is deemed to be invalid. Copying or excerpting portion of, or altering the content of the report is not permitted without the written authorization of AGC. The test results presented in the report apply only to the tested sample. Any objections to report issued by AGC should be submitted to AGC within 15days after the issuance of the test report. Further enquiry of validity or verification of the test report should be addressed to AGC by agc01@agccert.com.

3.3 Environmental Conditions

	Normal Conditions	Extreme Conditions
Temperature range (℃)	15 - 35	-20 - 50
Relative humidity range	20 % - 75 %	20 % - 75 %
Pressure range (kPa)	86 - 106	86 - 106
Note: The Extreme Temperature and Extreme Voltages declared by the manufacturer.		

3.4 Measurement Uncertainty

The reported uncertainty of measurement y ±U, where expended uncertainty U is based on a standard uncertainty multiplied by a coverage factor of k=2, providing a level of confidence of approximately 95%.

Test Items	Measurement Uncertainty
E-Field Strength (0.003-0.4MHz)	±1.5dB
E-Field Strength (0.4-10MHz)	±1.3dB
H-Field Strength (0.003-0.4MHz)	±1.3dB
H-Field Strength (0.4-10MHz)	±1.2dB

3.5 List of Equipment Used

Used	Equipment No.	Test Equipment	Manufacturer	Model No.	Serial No.	Last Cal. Date (YY-MM-DD)	Next Cal. Date (YY-MM-DD)
☒	AGC-RF-011	Broadband Field Meter	WAVECONTROL	SMP2	J-0004	2026-06-05	2027-06-04
☒	AGC-RF-012	Probe FHP	WAVECONTROL	WP400	J-0015	2026-06-05	2027-06-04

Any report having not been signed by authorized approver, or having been altered without authorization, or having not been stamped by the "Dedicated Testing/Inspection Stamp" is deemed to be invalid. Copying or excerpting portion of, or altering the content of the report is not permitted without the written authorization of AGC. The test results presented in the report apply only to the tested sample. Any objections to report issued by AGC should be submitted to AGC within 15days after the issuance of the test report. Further enquiry of validity or verification of the test report should be addressed to AGC by agc01@agccert.com.

4.System Test Configuration

4.1 Configuration of Tested System

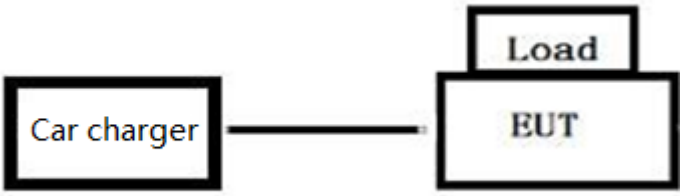

4.2 Equipment Used in Tested System

The following peripheral devices and interface cables were connected during the measurement:

☒Test Accessories Come from the Laboratory

No.	Equipment	Model No.	Manufacturer	Specification Information	Cable
1	Wireless Charging Load	YBZ	--	Support 5W,7.5W,10w,15W,25W	--
2	Car charger	--	C02066	Input: DC 12-24V Output: DC15V3A/20V3.35A	--
3	Car Battery	Fengfan	6-QW-95D	--	--

☐ Test Accessories Come From The Manufacturer

No.	Equipment	Model No.	Manufacturer	Specification Information	Cable
1	--	--	--	--	--

Any report having not been signed by authorized approver, or having been altered without authorization, or having not been stamped by the "Dedicated Testing/Inspection Stamp" is deemed to be invalid. Copying or excerpting portion of, or altering the content of the report is not permitted without the written authorization of AGC. The test results presented in the report apply only to the tested sample. Any objections to report issued by AGC should be submitted to AGC within 15days after the issuance of the test report. Further enquiry of validity or verification of the test report should be addressed to AGC by agc01@agccert.com.

5. Description of Test Modes

No.	Test Mode Description	Exposure Conditions
1	Wireless Output Load 25W	Mobile
2	Wireless Output Load 15W	Mobile
3	Wireless Output Load 10W	Mobile
4	Wireless Output Load 7.5W	Mobile
5	Wireless Output Load 5W	Mobile
6	Standby Mode	Mobile

Note:
1. When the output power is 15 W or 25 W, the operating frequency is fixed at 360 kHz ± 5 kHz. For other output power levels, the operating frequency falls within the range of 110.5 kHz to 148.5 kHz.
2. Only the result of the worst case (Mode 1- full load-25W) was recorded in the report, if no other cases.

Any report having not been signed by authorized approver, or having been altered without authorization, or having not been stamped by the "Dedicated Testing/Inspection Stamp" is deemed to be invalid. Copying or excerpting portion of, or altering the content of the report is not permitted without the written authorization of AGC. The test results presented in the report apply only to the tested sample. Any objections to report issued by AGC should be submitted to AGC within 15days after the issuance of the test report. Further enquiry of validity or verification of the test report should be addressed to AGC by agc01@agccert.com.

6. Maximum Permissible Exposure

6.1 Test Limits

Frequency Range (MHz)	Electric field strength (V/m)	Magnetic field strength (A/m)	Power density (mW/cm^2)	Averaging time (minutes)
(A) Limits for Occupational/Controlled Exposures				
0.3-3.0	614	1.63	*(100)	6
3.0-30	1842/f	4.89/f	*(900/f2)	6
30-300	61.4	0.163	1.0	6
300-1500	/	/	f/300	6
1500-100,000	/	/	5	6
(B) Limits for General Population/Uncontrolled Exposure				
0.3-1.34	614	1.63	*(100)	30
1.34-30	824/f	2.19/f	*(180/f2)	30
30-300	27.5	0.073	0.2	30
300-1500	/	/	f/1500	30
1500-100,00	/	/	1.0	30

- F=frequency in MHz
- *=Plane-wave equivalent power density
- RF exposure compliance will need to be determined with respect to 1.1307(c) and (d) of the FCC rules. The emissions should be within the limits at 300kHz in Table 1 of 1.1310(use the 300kHz limits for 150kHz: 614V/m,1.63A/m).
- Per KDB 680106 D01 v04, RF exposure evaluation at 20cm surrounding the device and 20cm above the top surface. Emission between 50 kHz to 300 kHz should be assessed versus the limits at 300 kHz in Table 1 of Section 1.1310: 1.63/Am and aggregate H-field strengths from all simultaneous transmitting coils are demonstrated to be less than 50% of the MPE limit.

Any report having not been signed by authorized approver, or having been altered without authorization, or having not been stamped by the "Dedicated Testing/Inspection Stamp" is deemed to be invalid. Copying or excerpting portion of, or altering the content of the report is not permitted without the written authorization of AGC. The test results presented in the report apply only to the tested sample. Any objections to report issued by AGC should be submitted to AGC within 15days after the issuance of the test report. Further enquiry of validity or verification of the test report should be addressed to AGC by agc01@agccert.com.

6.2 Test Setup (Block Diagram of Configuration)

- For Mobile Test Setup:

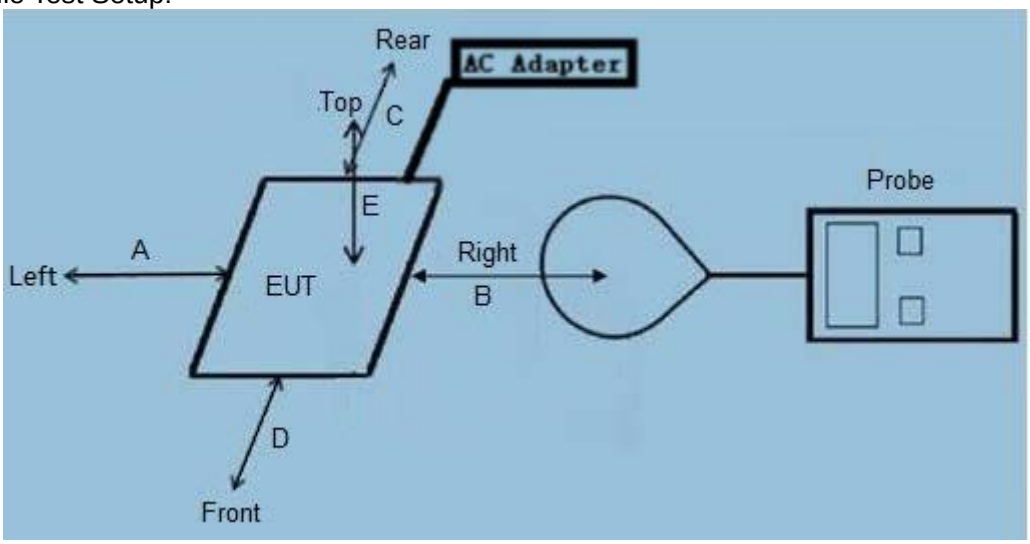

Note: The distance of the points A/B/C/D/E is 20cm.
Perform H-field/E-field measurements are taken along all three axes the device from 0cm~20cm in 2cm minimum increment for each edge surface of the host/client pair. If the center of the probe sensing element is more than 5mm from the probe outer edge, the field strengths need to be estimated for the positions that are not reachable.

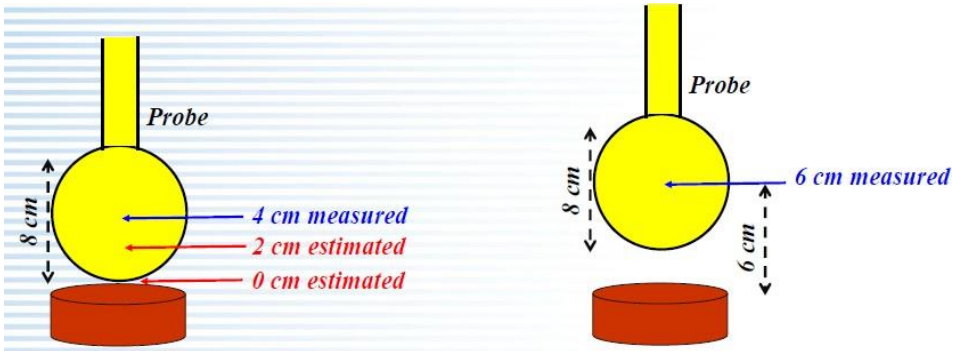

Example of probe measurements in points close to the device surface: estimates compared with measurements at 4 and 6 cm provide validation

According to Calibration information and specification about WP400 Probe, The Probe WP400 Probe's sensitive elements center is located in the probe's center, and the dimensions is 12.5x12.5mm. so the actual 0cm field strengths need to be estimated for the positions that are not reachable. The Extrapolated Value Calculation Method please Refer item 7). And the result of test distance 2cm~20cm was measured value.

WP400 Probe	Length	Width	Radius
	12.5cm	12.5cm	6.25cm

Note: The device is a coil emitting structure, just need to evaluated H-field.

Any report having not been signed by authorized approver, or having been altered without authorization, or having not been stamped by the "Dedicated Testing/Inspection Stamp" is deemed to be invalid. Copying or excerpting portion of, or altering the content of the report is not permitted without the written authorization of AGC. The test results presented in the report apply only to the tested sample. Any objections to report issued by AGC should be submitted to AGC within 15days after the issuance of the test report. Further enquiry of validity or verification of the test report should be addressed to AGC by agc01@agccert.com.

6.3 Test Procedures

■ For Mobile Exposure Conditions:

a) The RF exposure test was performed in anechoic chamber;
b) E and H-field measurements should be made with the center of the probe at a distance of 20cm surrounding the EUT.
c) The highest emission level was recorded and compared with limit.
d) The EUT was measured according to the dictates of KDB 680106 v04.

■ For Portable Exposure Conditions:

a) The RF exposure test was performed in anechoic chamber;
b) H-field measurements should be made along all three axes the device from 0cm~20cm in 2cm minimum increment for each edge surface of the host/client pair. If the center of the probe sensing element is more than 5mm from the probe outer edge, the field strengths need to be estimated for the positions that are not reachable, and the estimation methods are:
   - determine the distance from the test probe's sensitive elements to the probe tip based on the calibration information and/or specification of the test probe.
   - Use Biot-Savart law, equation and the measured value building mathematical model, where Biot-Savart equation is:

Top & Bottom Side:

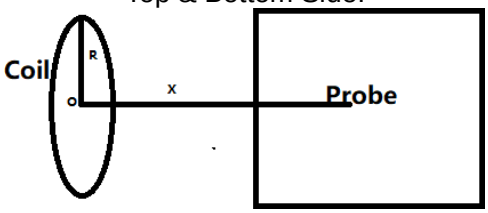

$$B = \frac{\mu_0 * I * N * R^2}{2 * (R^2 + x^2)^{3/2}}$$

Front, Left, Right & Rear Side:

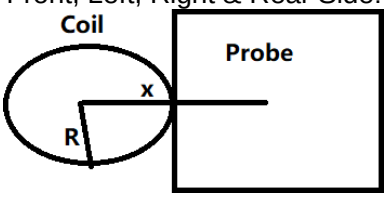

$$B = \frac{\mu_0 * I * N}{2 * x}$$

Any report having not been signed by authorized approver, or having been altered without authorization, or having not been stamped by the "Dedicated Testing/Inspection Stamp" is deemed to be invalid. Copying or excerpting portion of, or altering the content of the report is not permitted without the written authorization of AGC. The test results presented in the report apply only to the tested sample. Any objections to report issued by AGC should be submitted to AGC within 15days after the issuance of the test report. Further enquiry of validity or verification of the test report should be addressed to AGC by agc01@agccert.com.

Symbol Definition	
B	means H-field value. (Unit: A/m)
μ0	is space permeability, $\mu 0=4\pi*10^{-7}$.
I	a current element passing through a coil. (Unit: A)
R	the distance from the center point of the wireless charging device to other edges. R=39/2=19.5mm=1.95cm
x	means the evaluated point to the coil center. (For top & bottom side: x=test distance; For other side:x=test distance+R)
N	Number of turns, according to provided “Antenna specification” files: N=11

- Validate numerical calculation model through the probe measurements for the two closest points the device surface, and with 2cm increments, to ensure the value to show a 30% agreement between the model and the probe measurements.
- Estimate H-field strengths for the positions that are not reachable via numerical calculation.

a) Test performed with all the radiating structures operating at maximum power at the same time.
b) The highest emission level was recorded and compared with limit.
c) The EUT was measured according to the dictates of KDB 680106 v04

Any report having not been signed by authorized approver, or having been altered without authorization, or having not been stamped by the “Dedicated Testing/Inspection Stamp” is deemed to be invalid. Copying or excerpting portion of, or altering the content of the report is not permitted without the written authorization of AGC. The test results presented in the report apply only to the tested sample. Any objections to report issued by AGC should be submitted to AGC within 15days after the issuance of the test report. Further enquiry of validity or verification of the test report should be addressed to AGC by agc01@agccert.com.

6.4 Test Result

■ Mobile devices are evaluated as follows:

Worst Mode	Test Position	Distance (cm)	H-Field Strength (A/m)	Limit (A/m)	Result
Mode 1	Side A	20	0.425	1.63	Pass
Mode 1	Side B	20	0.526	1.63	Pass
Mode 1	Side C	20	0.328	1.63	Pass
Mode 1	Side D	20	0.357	1.63	Pass
Mode 1	Side E	20	0.416	1.63	Pass

Worst Mode	Test Position	Distance (cm)	E-Field Strength (V/m)	Limit (V/m)	Result
Mode 1	Side A	20	0.957	614	Pass
Mode 1	Side B	20	0.912	614	Pass
Mode 1	Side C	20	0.863	614	Pass
Mode 1	Side D	20	0.715	614	Pass
Mode 1	Side E	20	0.692	614	Pass

Any report having not been signed by authorized approver, or having been altered without authorization, or having not been stamped by the "Dedicated Testing/Inspection Stamp" is deemed to be invalid. Copying or excerpting portion of, or altering the content of the report is not permitted without the written authorization of AGC. The test results presented in the report apply only to the tested sample. Any objections to report issued by AGC should be submitted to AGC within 15days after the issuance of the test report. Further enquiry of validity or verification of the test report should be addressed to AGC by agc01@agccert.com.

Appendix I: Photographs of Test Setup

Refer to the Report No.: AGC11758250822AP02

Appendix II: Photographs of Test EUT

Refer to the Report No.: AGC11758250822AP03

Any report having not been signed by authorized approver, or having been altered without authorization, or having not been stamped by the "Dedicated Testing/Inspection Stamp" is deemed to be invalid. Copying or excerpting portion of, or altering the content of the report is not permitted without the written authorization of AGC. The test results presented in the report apply only to the tested sample. Any objections to report issued by AGC should be submitted to AGC within 15days after the issuance of the test report. Further enquiry of validity or verification of the test report should be addressed to AGC by agc01@agccert.com.

Conditions of Issuance of Test Reports

1. All samples and goods are accepted by the Attestation of Global Compliance (Shenzhen) Co., Ltd (the “Company”) solely for testing and reporting in accordance with the following terms and conditions. The company provides its services on the basis that such terms and conditions constitute express agreement between the company and any person, firm or company requesting its services (the “Clients”).
2. Any report issued by Company as a result of this application for testing services (the “Report”) shall be issued in confidence to the Clients and the Report will be strictly treated as such by the Company. It may not be reproduced either in its entirety or in part and it may not be used for advertising or other unauthorized purposes without the written consent of the Company. The Clients to whom the Report is issued may, however, show or send it, or a certified copy thereof prepared by the Company to its customer, supplier or other persons directly concerned. The Company will not, without the consent of the Clients, enter into any discussion or correspondence with any third party concerning the contents of the Report, unless required by the relevant governmental authorities, laws or court orders.
3.The Company shall not be called or be liable to be called to give evidence or testimony on the Report in a court of law without its prior written consent, unless required by the relevant governmental authorities, laws or court orders.
4. In the event of the improper use of the report as determined by the Company, the Company reserves the right to withdraw it, and to adopt any other additional remedies which may be appropriate.
5. Samples submitted for testing are accepted on the understanding that the Report issued cannot form the basis of, or be the instrument for, any legal action against the Company.
6. The Company will not be liable for or accept responsibility for any loss or damage however arising from the use of information contained in any of its Reports or in any communication whatsoever about its said tests or investigations.
7. Clients wishing to use the Report in court proceedings or arbitration shall inform the Company to that effect prior to submitting the sample for testing.
8. The Company is not responsible for recalling the electronic version of the original report when any revision is made to them. The Client assumes the responsibility to providing the revised version to any interested party who uses them.
9. Subject to the variable length of retention time for test data and report stored hereinto as otherwise specifically required by individual accreditation authorities, the Company will only keep the supporting test data and information of the test report for a period of six years. The data and information will be disposed of after the aforementioned retention period has elapsed. Under no circumstances shall we provide any data and information which has been disposed of after retention period. Under no circumstances shall we be liable for damage of any kind, including (but not limited to) compensatory damages, lost profits, lost data, or any form of special, incidental, indirect, consequential or punitive damages of any kind, whether based on breach of contract of warranty, tort (including negligence), product liability or otherwise, even if we are informed in advance of the possibility of such damages.

-----End of Report-----

Any report having not been signed by authorized approver, or having been altered without authorization, or having not been stamped by the “Dedicated Testing/Inspection Stamp” is deemed to be invalid. Copying or excerpting portion of, or altering the content of the report is not permitted without the written authorization of AGC. The test results presented in the report apply only to the tested sample. Any objections to report issued by AGC should be submitted to AGC within 15days after the issuance of the test report. Further enquiry of validity or verification of the test report should be addressed to AGC by agc01@agccert.com.