Remote control

Start/Stop button:

Press to start/stop the product.

Direction button:

Press this key to select the direction of the pedal.

when the product works, the initial direction is forward.

- key:

You can decrease your speed/resistance by touching this key, the minimum level is 1.

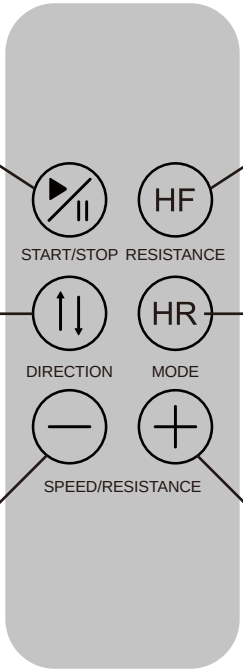

Resistance Mode Key:

Press this key to enter resistance mode after restarting the machine.

Motorized Mode Key:

Press this key to enter the motorized mode after restarting the machine.

+ key:

You can increase your speed/resistance by touching this key, the maximum level is 10.

Remote control

Operation is the same as the control panel.

Note: When replacing the battery, it is recommended to use CR2025 button battery.

Magnetic remote control storage location

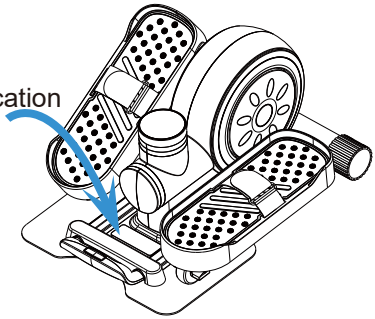

APP Instructions for use

Scan the QR code on the right

FITSHOW APP

Http://ifitshow.com/qr

Then your device will switch to APP store, download and install this app, enter the app and set permissions.

To log in to the app, you can register using your phone number or email address.

Select the Elliptical Trainer program and press Start to turn on the product.

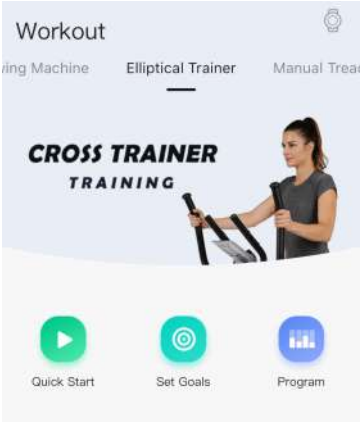

Note: Please use the correct phone number or e-mail address in case you forget your username and password.

You can also use Kinomap APP.

How to move products

1.Press the spring-loaded clasp to pull the rod out.

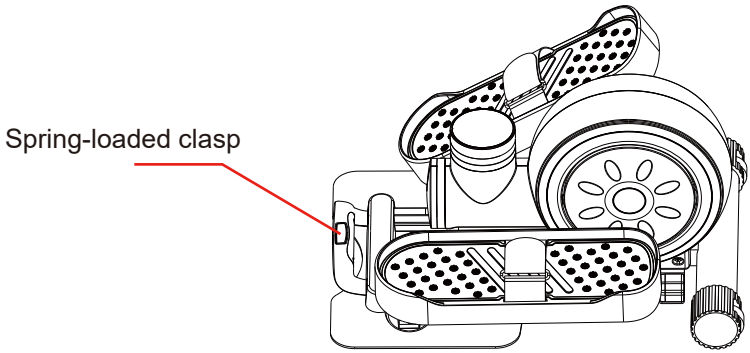

2.Then loosen the spring-loaded clasp and pull the handle upward to move the product.

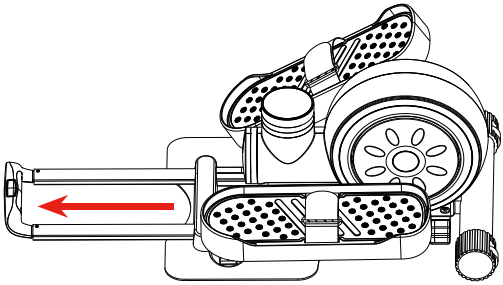

As shown in the figure below

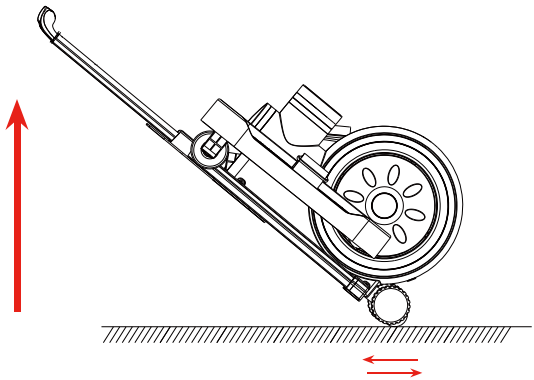

Tips for use

- This device is designed for seated use. Avoid standing on the pedals as it can cause serious injury.

- Make sure both pedals are securely fastened before use. Loose pedals can make noise, come loose, and pose a risk of damage or injury.

- Don't place the machine where it might impede movement. If you are experiencing problems with your knees touching the table, consider:
  a.Adjust the height of your chair to lower your knees.
  b.Place the machine farther away to allow fuller extension of the legs and eventually lower the knees.

- Sit up straight and maintain proper posture when using an elliptical machine under a table, which helps strengthen your core muscles and benefits spinal health.

- Workout on your under desk ellipse, taking full advantage of the matching dumbbells that target both your upper and lower body to ensure a comprehensive and well-rounded workout experience.

Parameters

Power	60W
Input voltage	100-240V 50/60Hz
Speed range	1-10 levels
Mode	HR(Motorized mode)、HF(Resistance mode)
Direction	Forward/backward.
Product size	508*345*280mm
Package size	560* 382* 330mm
Net weight	8.3KG
Gross weight	9.8KG
Extra features	APP/Infrared remote control

FCC Caution.

(1)§ 15.19 Labelling requirements.
This device complies with part 15 of the FCC Rules. Operation is subject to the following two conditions: (1) This device may not cause harmful interference, and (2) this device must accept any interference received, including interference that may cause undesired operation.
§ 15.21 Changes or modification warning
Any Changes or modifications not expressly approved by the party responsible for compliance could void the user's authority to operate the equipment.
§ 15.105 Information to the user.
Note: This equipment has been tested and found to comply with the limits for a Class B digital device, pursuant to part 15 of the FCC Rules. These limits are designed to provide reasonable protection against harmful interference in a residential installation. This equipment generates uses and can radiate radio frequency energy and, if not installed and used in accordance with the instructions, may cause harmful interference to radio communications. However, there is no guarantee that interference will not occur in a particular installation. If this equipment does cause harmful interference to radio or television reception, which can be determined by turning the equipment off and on, the user is encouraged to try to correct the interference by one or more of the following measures:
-Reorient or relocate the receiving antenna.
-Increase the separation between the equipment and receiver.
-Connect the equipment into an outlet on a circuit different from that to which the receiver is connected.
-Consult the dealer or an experienced radio/TV technician for help.

RF warning for Portable device:
The device has been evaluated to meet general RF exposure requirement. The device can be use d in portable exposure condition without restriction.
According to §15.247(e)(i) and §1.1307(b)(1), systems operating under the provisions of this section shall be operated in a manner that ensures that the public is not exposed to radio frequency energy level in excess of the Commission’s guidelines.
According to KDB 447498 (2)(a)(i)