TEST REPORT

Product Name	**：**	**MINI PC**
Model Number	**：**	**M1 Lite-125H，M1 Lite-****(“*” = “0-9” 、“A-Z”、 “-”、“Blank”)**
FCC ID	**：**	**2A49R-M1LITE**

Prepared for	:	MICRO COMPUTER (HK) TECH LIMITED
Address	:	RM 18, 28/F, Shui On Centre，6-8 Harbour Road, WaterfRont, Wan Chai, HK
Prepared by	:	EMTEK (SHENZHEN) CO., LTD.
Address	:	Building 69, Majialong Industry Zone, Nanshan District, Shenzhen, Guangdong, China Tel: (0755) 26954280 Fax: (0755) 26954282

Report Number	:	ENS2601210300W01203R
Date(s) of Tests	:	January 28, 2026 to March 10, 2026
Date of issue	:	March 11, 2026

TEST RESULT CERTIFICATION

Applicant	:	MICRO COMPUTER (HK) TECH LIMITED
Address	:	RM 18, 28/F, Shui On Centre · 6-8 Harbour Road, WaterfRont, Wan Chai, HK
Manufacturer	:	MICRO COMPUTER (HK) TECH LIMITED
Address	:	RM 18, 28/F, Shui On Centre · 6-8 Harbour Road, WaterfRont, Wan Chai, HK
EUT	:	MINI PC
Model Name	:	M1 Lite-125H, M1 Lite-****(“*” = “0-9” 、“A-Z”、 “-”、“Blank”)
Trademark	:	N/A

Measurement Procedure Used:

APPLICABLE STANDARDS	
STANDARD	**TEST RESULT**
FCC 47 CFR Part 2 , Subpart J FCC 47 CFR Part 15 , Subpart C	**PASS**

The above equipment was tested by EMTEK (SHENZHEN) CO., LTD. The test data, data evaluation, test procedures, and equipment configurations shown in this report were made in accordance with the procedures given in ANSI C63.10 (2020) and the energy emitted by the sample EUT tested as described in this report is in compliance with the requirements of FCC Rules Part 2 and Part 15.247

The test results of this report relate only to the tested sample identified in this report.

Date of Test :	January 28, 2026 to March 10, 2026
Prepared by :	Yu Xiaolan /Editor
Reviewer :	Xia Lilu /Supervisor
Approve & Authorized Signer :	Wang Li /Manager

Modified History

Version	Report No.	Revision Date	Summary
V1.0	ENS2601210300W01203R	/	Original Report

TABLE OF CONTENTS

1 EUT TECHNICAL DESCRIPTION 5

2 SUMMARY OF TEST RESULT 6

3 TEST METHODOLOGY 7

3.1 GENERAL DESCRIPTION OF APPLIED STANDARDS 7
3.2 MEASUREMENT EQUIPMENT USED 7
3.3 DESCRIPTION OF TEST MODES 8

4 FACILITIES AND ACCREDITATIONS 9

4.1 FACILITIES 9
4.2 EQUIPMENT 9
4.3 LABORATORY ACCREDITATIONS AND LISTINGS 9

5 TEST SYSTEM UNCERTAINTY 10

6 SETUP OF EQUIPMENT UNDER TEST 11

6.1 RADIO FREQUENCY TEST SETUP 1 11
6.2 RADIO FREQUENCY TEST SETUP 2 11
6.3 CONDUCTED EMISSION TEST SETUP 14
6.4 BLOCK DIAGRAM CONFIGURATION OF TEST SYSTEM 15
6.5 SUPPORT EQUIPMENT 15

7 TEST REQUIREMENTS 16

7.1 MINIMUM (6DB) OCCUPIED BANDWIDTH 16
7.2 MAXIMUM PEAK CONDUCTED OUTPUT POWER 17
7.3 MAXIMUM POWER SPECTRAL DENSITY 18
7.4 UNWANTED SPURIOUS EMISSIONS 19
7.5 RADIATED EMISSION 20
7.6 CONDUCTED EMISSION TEST 32
7.7 ANTENNA APPLICATION 35

1 EUT TECHNICAL DESCRIPTION

Characteristics	Description
Product	MINI PC
Model Number	M1 Lite-125H, M1 Lite-****(“*” = “0-9” 、“A-Z”、 “-”、“Blank”)
Sample Number	2#
IEEE 802.11 WLAN Mode Supported	☒802.11b ☒802.11g ☒802.11n(20MHz channel bandwidth) ☒802.11n(40MHz channel bandwidth) ☒802.11ax(20MHz channel bandwidth) ☒802.11ax(40MHz channel bandwidth)
Modulation	DSSS with DBPSK/DQPSK/CCK for 802.11b; OFDM with BPSK/QPSK/16QAM/64QAM for 802.11g/n/ax;
Operating Frequency Range	☒2412-2462MHz for 802.11b/g/n(HT20)/ax(HE20); ☒2422-2452MHz for 802.11n(HT40)/ax(HE40);
Number of Channels	☒11 channels for 802.11b/g/n(HT20)/ax(HE20); ☒7 Channels for 802.11n(HT40)/ax(HE40);
Antenna Type	FPC Antenna
Antenna Gain	Ant1：1.01 dBi
Power Supply	DC 19V from adapter Adapter1: Model :DSA-120PFG-193190632 Input:100-240V~50/60Hz,2.0A Output:19.0V,6.32A,120.08W Adapter2: Model: hyleton-120W-1906320 Input:100-240V~50/60Hz,2A Max Output:19.0V,6.32A,120.0W
Date of Received	January 27, 2026

Note: *for more details, please refer to the user’s manual of the EUT.*

2 SUMMARY OF TEST RESULT

FCC Part Clause	Test Parameter	Verdict	Remark
15.247(a)(2)	DTS (6dB) Bandwidth	PASS	*
15.247(b)(3)	Maximum Peak Conducted Output Power	PASS	*
15.247(e)	Maximum Power Spectral Density Level	PASS	*
15.247(d)	Unwanted Emission Into Non-Restricted Frequency Bands	PASS	*
15.247(d) 15.209	Unwanted Emission Into Restricted Frequency Bands (conducted)	PASS	*
15.247(d) 15.209	Radiated Spurious Emission	PASS	
15.207	Conducted Emission Test	PASS	
15.247(b)	Antenna Application	PASS	
	NOTE1: N/A (Not Applicable) NOTE2: According to FCC OET KDB 558074, the report use radiated measurements in the restricted frequency bands. In addition, the radiated test is also performed to ensure the emissions emanating from the device cabinet also comply with the applicable limits. NOTE3: * means that this item refers to module report RFBARR-WTW-P21100969 of FCC ID: RAS-MT7902		

RELATED SUBMITTAL(S) / GRANT(S):

This submittal(s) (test report) is intended for FCC ID: 2A49R-M1LITE filing to comply with Section 15.247 of the FCC Part 15, Subpart C Rules.

3 TEST METHODOLOGY

3.1 GENERAL DESCRIPTION OF APPLIED STANDARDS

According to its specifications, the EUT must comply with the requirements of the following standards:

FCC 47 CFR Part 2, Subpart J

FCC 47 CFR Part 15, Subpart C

FCC KDB 558074 D01 15.247 Meas Guidance v05r02

FCC KDB 662911 D01 Multiple Transmitter Output v02r01

3.2 MEASUREMENT EQUIPMENT USED

For Conducted Emission Test Equipment

Equipment	Manufacturer	Model No.	Serial No.	Last Cal.	Cal. Interval
EMI Test Receiver	Rohde & Schwarz	ESCI	101045	2025/5/9	1Year
PULSE LIMTER	Schwarzbeck	VTSD 9561 F-B	00955	2025/5/9	1Year
AMN	Rohde & Schwarz	ESH3-Z5	100191	2025/5/9	1Year
AMN	Schwarzbeck	NNLK 8129	8129203	2025/5/9	1Year
V-Network	Rohde & Schwarz	ESH3-Z6	100011	2025/5/9	1Year
V-Network	Rohde & Schwarz	ESH3-Z6	100253	2025/5/9	1Year

For Spurious Emissions Test

Equipment	Manufacturer	Model No.	Serial No.	Last Cal.	Cal. Interval
Pre-Amplifier	HP	8447F	2944A07999	2025/5/9	1Year
EMI Test Receiver	Rohde & Schwarz	ESCI	101414	2025/5/9	1Year
Bilog Antenna	Schwarzbeck	VULB9163	712	2025/7/5	2 Year
Horn antenna	Schwarzbeck	BBHA9120D	9120D-1178	2025/8/9	2 Year
Pre-Amplifie	Bonn	BLMA0118-5G	2213967B-02	2025/10/16	1Year
Spectrum Analyzer	Rohde & Schwarz	FSV40	100967	2025/5/9	1Year
Horn antenna	Schwarzbeck	BBHA9170	9170-399	2025/5/13	2 Year
Loop Antenna	Schwarzbeck	FMZB1519	1519-012	2025/5/13	2 Year

For other test items:

Equipment	Manufacturer	Model No.	Serial No.	Last Cal.	Cal. Interval
Wideband Radio Communication Tester	R&S	CMW500	171168	2025/9/9	1Year
Frequency Extender	R&S	CMW-Z800A	100430	2025/9/9	1Year
Spectrum Analyzer	R&S	FSV3044	101289	2025/12/16	1Year
Analog Signal Generator	R&S	SMB100A	183237	2025/9/9	1Year
Vector Signal Generator	R&S	SMM100A	101808	2025/9/9	1Year
RF Control Unit(Power Meter)	Tonscend	JS0806-2	22C8060567	2025/9/9	1Year
Temperature&Humidity Chamber	ESPEC	EL-02KA	12107166	2025/5/10	1 Year

3.3 DESCRIPTION OF TEST MODES

The EUT has been tested under its typical operating condition.
The EUT configuration for testing is installed on RF field strength measurement to meet the Commissions requirement and operating in a manner which intends to maximize its emission characteristics in a continuous normal application.

The Transmitter was operated in the normal operating mode. The TX frequency was fixed which was for the purpose of the measurements.

Test of channel included the lowest and middle and highest frequency to perform the test, then record on this report.

Those data rates (802.11b: 1 Mbps; 802.11g: 6 Mbps; 802.11n : MCS0) were used for all test.

Pre-defined engineering program for regulatory testing used to control the EUT for staying in continuous transmitting and receiving mode is programmed.

Frequency and Channel list for 802.11 b/g/n(HT20)/ ax(HE20):

Channel	Frequency (MHz)	Channel	Frequency (MHz)	Channel	Frequency (MHz)
1	2412	5	2432	9	2452
2	2417	6	2437	10	2457
3	2422	7	2442	11	2462
4	2427	8	2447		

Frequency and Channel list for 802.11 n(HT40)/ax(HE40):

Channel	Frequency (MHz)	Channel	Frequency (MHz)	Channel	Frequency (MHz)
3	2422	6	2437	9	2452
4	2427	7	2442		
5	2432	8	2447		

Test Frequency and Channel for 802.11 b/g/n(HT20)/ ax(HE20):

Lowest Frequency		Middle Frequency		Highest Frequency	
Channel	Frequency (MHz)	Channel	Frequency (MHz)	Channel	Frequency (MHz)
1	2412	6	2437	11	2462

Test Frequency and Channel for 802.11 b/g/n(HT40) /ax(HE40)::

Lowest Frequency		Middle Frequency		Highest Frequency	
Channel	Frequency (MHz)	Channel	Frequency (MHz)	Channel	Frequency (MHz)
3	2422	6	2437	9	2452

4 FACILITIES AND ACCREDITATIONS

4.1 FACILITIES

All measurement facilities used to collect the measurement data are located at:

EMTEK (Shenzhen) Co., Ltd.
Building 69, Majialong Industry Zone District, Nanshan District, Shenzhen, China
The sites are constructed in conformance with the requirements of ANSI C63.7, ANSI C63.4 and CISPR Publication 22.

4.2 EQUIPMENT

Radiated emissions are measured with one or more of the following types of linearly polarized antennas: tuned dipole, biconical, log periodic, bi-log, and/or ridged waveguide, horn. Spectrum analyzers with preselectors and quasi-peak detectors are used to perform radiated measurements.

Conducted emissions are measured with Line Impedance Stabilization Networks and EMI Test Receivers.

Calibrated wideband preamplifiers, coaxial cables, and coaxial attenuators are also used for making measurements.

All receiving equipment conforms to CISPR Publication 16-1, “Radio Interference Measuring Apparatus and Measurement Methods.”

4.3 LABORATORY ACCREDITATIONS AND LISTINGS

Site Description		
EMC Lab.	:	**Accredited by CNAS** The Certificate Registration Number is L2291. The Laboratory has been assessed and proved to be in compliance with CNAS-CL01 (identical to ISO/IEC 17025:2017) **Accredited by FCC** Designation Number: CN1204 Test Firm Registration Number: 882943 **Accredited by A2LA** The Certificate Number is 4321.01. **Accredited by Industry Canada** The Conformity Assessment Body Identifier is CN0008
Name of Firm	:	EMTEK (SHENZHEN) CO., LTD.
Site Location	:	Building 69, Majialong Industry Zone, Nanshan District, Shenzhen, Guangdong, China

5 TEST SYSTEM UNCERTAINTY

The following measurement uncertainty levels have been estimated for tests performed on the apparatus:

Parameter	Uncertainty
Radio Frequency	±1x10^-5
Maximum Peak Output Power Test	±1.0dB
Conducted Emissions Test	±2.0dB
Radiated Emission Test	±2.0dB
Power Density	±2.0dB
Occupied Bandwidth Test	±1.0dB
Band Edge Test	±3dB
All emission, radiated	±3dB
Antenna Port Emission	±3dB
Temperature	±0.5℃
Humidity	±3%

Measurement Uncertainty for a level of Confidence of 95%

6 SETUP OF EQUIPMENT UNDER TEST

6.1 RADIO FREQUENCY TEST SETUP 1

The WLAN component's antenna ports(s) of the EUT are connected to the measurement instrument per an appropriate attenuator. The EUT is controlled by PC/software to emit the specified signals for the purpose of measurements.

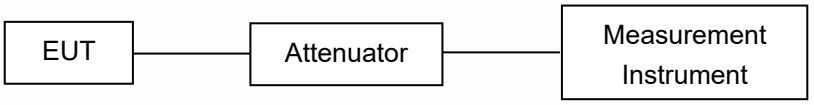

6.2 RADIO FREQUENCY TEST SETUP 2

The test site semi-anechoic chamber has met the requirement of NSA tolerance 4 dB according to the standards: ANSI C63.10. The test distance is 3m.The setup is according to the requirements in Section 13.1.4.1 of ANSI C63.10-2020 and CAN/CSA-CEI/IEC CISPR 22.
The maximal emission value is acquired by adjusting the antenna height, polarisation and turntable azimuth. Normally, the height range of antenna is 1 m to 4 m, the azimuth range of turntable is 0° to 360°, and the receive antenna has two polarizations Vertical (V) and Horizontal (H).

Below 30MHz：
The EUT is placed on a turntable 0.8 meters above the ground in the chamber, 3 meter away from the antenna (loop antenna). The Antenna should be positioned with its plane vertical at the specified distance from the EUT and rotated about its vertical axis for maximum response at each azimuth about the EUT. The center of the loop shall be 1 m above the ground. For certain applications, the loop antenna plane may also need to be positioned horizontally at the specified distance from the EUT.

Above 30MHz：
The EUT is placed on a turntable 0.8 meters above the ground in the chamber, 3 meter away from the antenna. The maximal emission value is acquired by adjusting the antenna height, polarisation and turntable azimuth. Normally, the height range of antenna is 1 m to 4 m, the azimuth range of turntable is 0° to 360°, and the receive antenna has two polarizations Vertical (V) and Horizontal (H).

Above 1GHz:
The EUT is placed on a turntable 1.5 meters above the ground in the chamber, 3 meter away from the antenna. The maximal emission value is acquired by adjusting the antenna height, polarisation and turntable azimuth. Normally, the height range of antenna is 1 m to 4 m, the azimuth range of turntable is 0° to 360°, and the receive antenna has two polarizations Vertical (V) and Horizontal (H).

Measurements shall be taken, using the following steps, at a test site that has been validated using the procedures of ANSI C63.4 or the latest CISPR 16-1-4 for measurements above 1 GHz, so as to simulate a near free-space environment (see RSS-Gen for applicable versions of ANSI and CISPR standards).
(1) Line the ground plane with absorbers between the transmitter and the receive antenna to minimize reflections. The absorbers used should have a minimum-rated attenuation of 20 dB through the measurement frequency range of interest. The absorbers shall be positioned to replicate the layout used when compliance with the applicable acceptability criterion was achieved, as set forth in the aforementioned standards on site validation.
(2) Set the height of the receive antenna to 1.5 m. The receive antenna must be one that was designed and fabricated to operate over the entire frequency range of interest, for example, an appropriate standard gain horn.
(3) The distance between the receive antenna and the radiating source shall be sufficient in order to ensure far-field conditions.
(4) Mount the transmitter at a height of 1.5 m.
(5) Configure the device under test (DUT) to produce the maximum power spectral density as measured while assessing compliance with Section 6.2.2 (i.e. channel frequency, modulation type and data rate). If the DUT is equipped with a detachable antenna and the antenna is intended for remote installation (i.e.

tower-mounted), the DUT may be substituted with a suitable signal generator. The level and frequency settings on the generator shall be set so as to reproduce the maximum power spectral density, measured within a 1 MHz bandwidth, obtained while assessing compliance to Section 6.2.2.
(6) Position the transmitter or the radiating antenna so that elevation pattern measurements can be taken.
(7) Find the 0° reference point in the horizontal plane.
(8) Care should be taken when positioning the receive antenna to avoid cross-polarization. Antennas of known mounting polarization should be assessed with the receive antenna oriented in the same polarity. If the polarization of the transmit antenna is unknown or the transmit antenna can be mounted in either polarization, e.i.r.p. measurements should be performed to find which
mounting polarity provides the highest e.i.r.p. value. Testing shall be carried out with the receive antenna and the DUT mounted in each polarity.
(9) The emission shall be centred on the display of the spectrum analyzer with the following settings:
i. If the power spectral density of the DUT was assessed with a peak detector and the antenna cannot be detached from the DUT, the spectrum analyzer shall be set to a peak detector with a resolution bandwidth and video bandwidth of 1 MHz.
ii. If the power spectral density of the DUT was assessed using a sample detector with power averaging and the antenna cannot be detached from the DUT, the spectrum analyzer shall be set to a sample detector, configured to produce 100 power averages and set with a resolution bandwidth, as well as a video bandwidth of 1 MHz.
iii. If the antenna can be detached from the DUT, a continuous wave (CW) signal equal to that of the power spectral density measurement may be used, the spectrum analyzer shall be set to peak detector with a resolution bandwidth and video bandwidth of 1 MHz.

(10) Rotate the turntable 360° recording the field strength at each step. Throughout the main beam of the antenna, the step size shall be kept to a maximum of 1°.
Once outside the main beam of the antenna, the maximum step size shall be as follows, when compared to the requirements of Section 6.2.2:
i. Between 0° and 8°, maximum step size of 2°;
ii. Between 8° and 40°, maximum step size of 4°;
iii. Between 40° and 45°, maximum step size of 1°;
iv. Between 45° and 90°, maximum step size of 5°.
Once the mask reaches 90°, the mask will be inverted and the step size will follow in the same manner as above.
For the purpose of this procedure, the main beam of the antenna is defined as the 3 dB beamwidth.
(11) Convert the measured field strength values in terms of e.i.r.p. density (dBW/1 MHz) using the following equation:

$$\text{e.i.r.p density(dBW/MHz)}=10\log((E*r)^2/30)$$

E = field strength in V/m
r = measurement distance in metres

(12) Plot the results against the emission mask with reference to the horizontal plane.
(13) Using the plot, the 0° can be rotated to determine the worst-case installation tilt angle.
(14) Testing shall be performed using the highest gain antenna for every antenna type, if applicable.
(15) Antenna type(s), antenna model number(s), and worst-case tilt angle(s) necessary to remain compliant with the elevation mask requirement set forth in Section 6.2.2(3) of RSS-247 shall be clearly indicated in the user manual.
The following figure is an example of a polar elevation mask measured using the Method 1 reference to dBμV/m at 3 m.

(a) Radiated Emission Test Set-Up, Frequency Below 30MHz

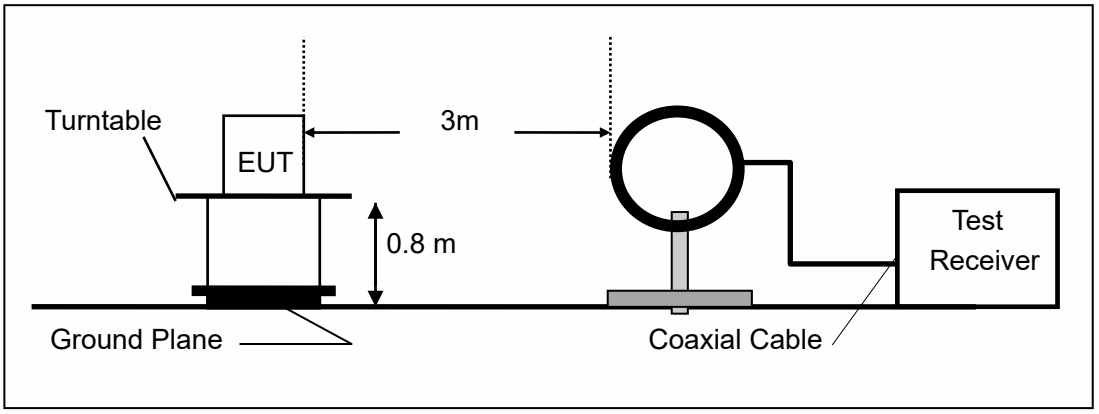

(b) Radiated Emission Test Set-Up, Frequency Below 1000MHz

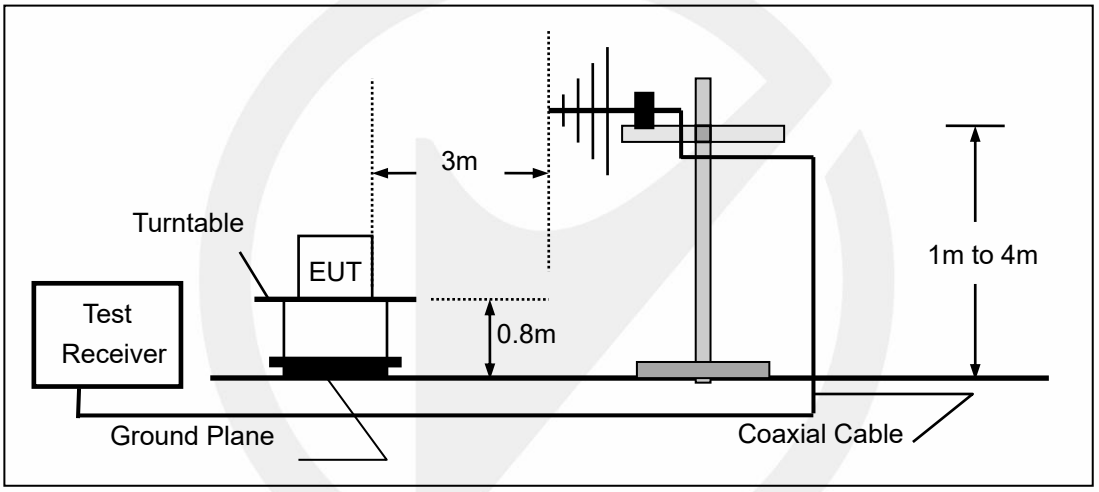

(c) Radiated Emission Test Set-Up, Frequency above 1000MHz

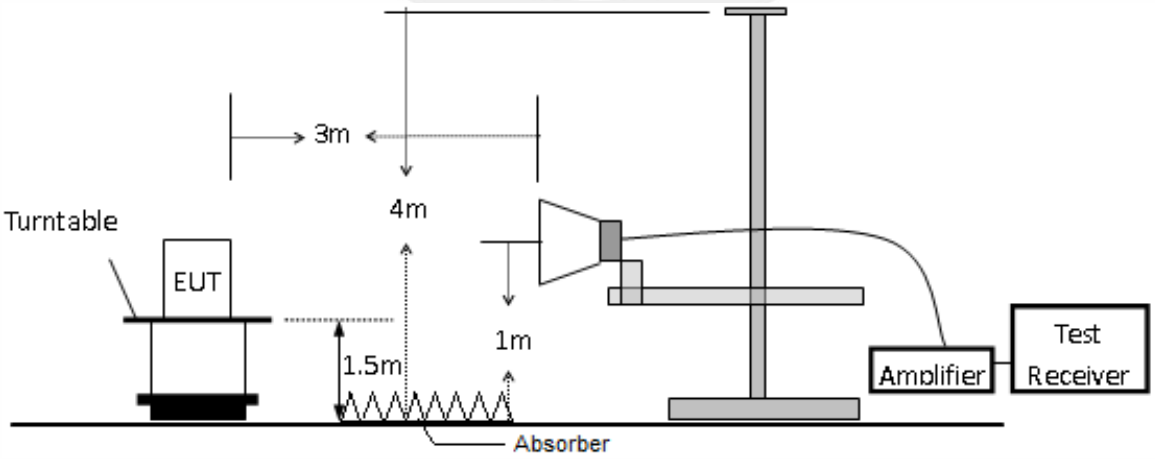

6.3 CONDUCTED EMISSION TEST SETUP

The mains cable of the EUT (maybe per AC/DC Adapter) must be connected to LISN. The LISN shall be placed 0.8 m from the boundary of EUT and bonded to a ground reference plane for LISN mounted on top of the ground reference plane. This distance is between the closest points of the LISN and the EUT. All other units of the EUT and associated equipment shall be at least 0.8m from the LISN.
Ground connections, where required for safety purposes, shall be connected to the reference ground point of the LISN and, where not otherwise provided or specified by the manufacturer, shall be of same length as the mains cable and run parallel to the mains connection at a separation distance of not more than 0.8 m.
According to the requirements in Section 13.1.4.1 of ANSI C63.10-2020 Conducted emissions from the EUT measured in the frequency range between 0.15 MHz and 30 MHz using CISPR Quasi-Peak and average detector mode.

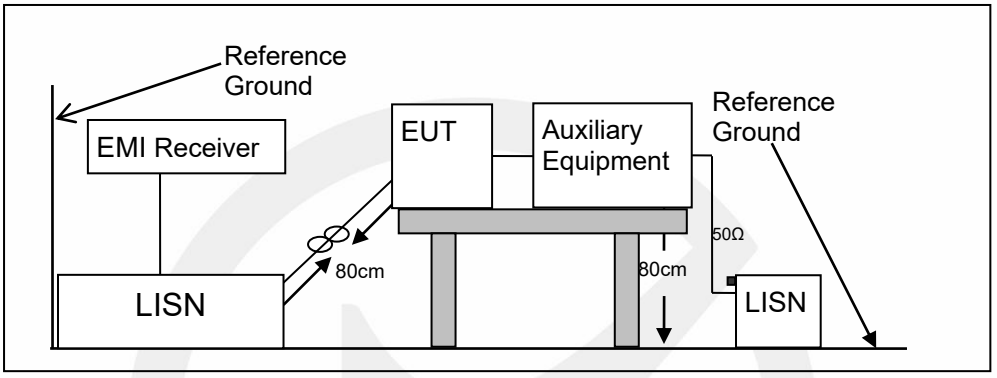

6.4 BLOCK DIAGRAM CONFIGURATION OF TEST SYSTEM

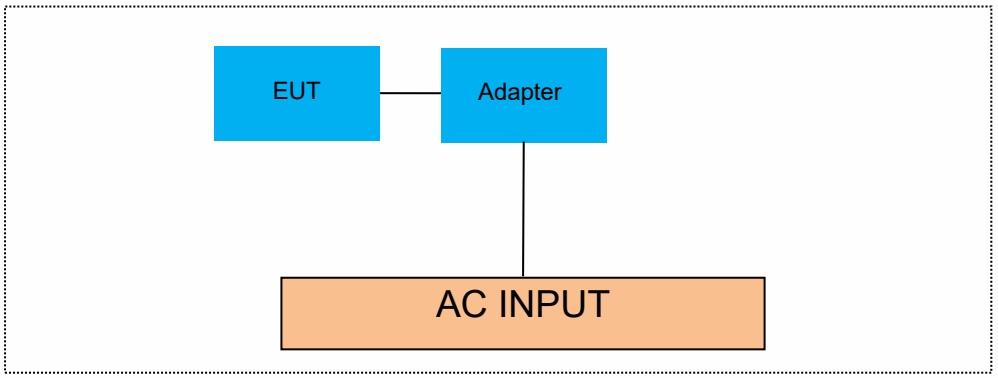

6.5 SUPPORT EQUIPMENT

EUT Cable List and Details			
Cable Description	Length (m)	Shielded/Unshielded	With / Without Ferrite
/	/	/	/

Auxiliary Cable List and Details			
Cable Description	Length (m)	Shielded/Unshielded	With / Without Ferrite
/	/	/	/

Auxiliary Equipment List and Details			
Description	Manufacturer	Model	Serial Number
/	/	/	/

Notes:

1. *All the equipment/cables were placed in the worst-case configuration to maximize the emission during the test.*
2. *Grounding was established in accordance with the manufacturer's requirements and conditions for the intended use.*

7 TEST REQUIREMENTS

7.1 MINIMUM (6DB) OCCUPIED BANDWIDTH

7.1.1 Applicable Standard

According to FCC Part15.247 (a)(2) and KDB 558074 D01 15.247 Meas Guidance v05r02

7.1.2 Conformance Limit

The minimum -6 dB bandwidth shall be at least 500 kHz.

7.1.3 Test Configuration

Test according to clause 6.1 radio frequency test setup

7.1.4 Test Procedure

The EUT was operating in WIFI mode and controlled its channel. Printed out the test result from the spectrum by hard copy function.
The RF output of EUT was connected to the spectrum analyzer by RF cable and attenuator. The path loss was compensated to the results for each measurement.
Set to the maximum power setting and enable the EUT transmit continuously
Set RBW = 100 kHz.
Set the video bandwidth (VBW) =300 kHz.
Set Span=2 times OBW
Set Detector = Peak.
Set Trace mode = max hold.
Set Sweep = auto couple.
Allow the trace to stabilize.
Measure the maximum width of the emission that is constrained by the frequencies associated with the two outermost amplitude points (upper and lower frequencies) that are attenuated by 6 dB relative to the maximum level measured in the fundamental emission.
Measure and record the results in the test report.

7.1.5 Test Results

Temperature :	25℃	ATM Pressure::	1011 mbar
Humidity :	45 %	Test By:	Lily

Note: The module of this prototype has been certified, and the data of the module refers to the original report: RFBARR-WTW-P21100969.

7.2 MAXIMUM PEAK CONDUCTED OUTPUT POWER

7.2.1 Applicable Standard

According to FCC Part15.247 (b)(3) and KDB 558074 D01 15.247 Meas Guidance v05r02

7.2.2 Conformance Limit

The maximum peak conducted output power of the intentional radiator for systems using digital modulation in the 2400 - 2483.5 MHz bands shall not exceed: 1 Watt (30dBm).

7.2.3 Test Configuration

Test according to clause 7.1 radio frequency test setup 1

7.2.4 Test Procedure

■ According to FCC Part15.247(b)(3)
The maximum peak conducted output power may be measured using a broadband peak RF power meter. The power meter shall have a video bandwidth that is greater than or equal to the DTS bandwidth and shall utilize a fast-responding diode detector.
The testing follows FCC public Notice DA 00-705 Measurement Guidelines.
The RF output of EUT was connected to the power meter by RF cable and attnuator. The path loss was compensated to the results for each measurement.
Set to the maximum output power setting and enable the EUT transmit continuously.
Measure the conducted output power with cable loss and record the results in the test report.
Measure and record the results in the report.
■ According to FCC Part 15.247(b)(4):
Conducted output power limit specified in paragraph (b) of this section is based on the use of antennas with directional gains that do not exceed 6 dBi. If transmitting antennas of directional gain greater than 6 dBi are used, the conducted output power from the intentional radiator shall be reduced below the stated values in paragraphs (b)(3) of this section, as appropriate, by the amount in dB that the directional gain of the antenna exceeds 6 dBi.
Note: If antenna Gain exceeds 6 dBi, then Output power Limit=30-(Gain- 6)

7.2.5 Test Results

Temperature :	25℃	ATM Pressure:	1011 mbar
Humidity :	45 %	Test By:	Lily

Note: The module of this prototype has been certified, and the data of the module refers to the original report: RFBARR-WTW-P21100969.

7.3 MAXIMUM POWER SPECTRAL DENSITY

7.3.1 Applicable Standard

According to FCC Part15.247(e) and KDB 558074 D01 15.247 Meas Guidance v05r02

7.3.2 Conformance Limit

The transmitter power spectral density conducted from the transmitter to the antenna shall not be greater than 8 dBm in any 3 kHz band during any time interval of continuous transmission. This power spectral density shall be determined in accordance with the provisions of section 5.4(d), (i.e. the power spectral density shall be determined using the same method as is used to determine the conducted output power).

7.3.3 Test Configuration

Test according to clause 6.1 radio frequency test setup

7.3.4 Test Procedure

This procedure shall be used if maximum peak conducted output power was used to demonstrate compliance
The transmitter output (antenna port) was connected to the spectrum analyzer
Set analyzer center frequency to DTS channel center frequency.
Set the span to 1.5 times the DTS bandwidth.
Set the RBW to: 3 kHz
Set the VBW to: 10 kHz.
Set Detector = peak.
Set Sweep time = auto couple.
Set Trace mode = max hold.
Allow trace to fully stabilize.
Use the peak marker function to determine the maximum amplitude level within the RBW.

7.3.5 Test Results

Temperature :	25℃	ATM Pressure::	1011 mbar
Humidity :	45 %	Test By:	Lily

Note: The module of this prototype has been certified, and the data of the module refers to the original report: RFBARR-WTW-P21100969.

7.4 UNWANTED SPURIOUS EMISSIONS

7.4.1 Applicable Standard

According to FCC Part15.247(d) and KDB 558074 D01 15.247 Meas Guidance v05r02

7.4.2 Conformance Limit

According to FCC Part 15.247(d):
In any 100 kHz bandwidth outside the frequency band in which the spread spectrum or digitally modulated device is operating, the RF power that is produced shall be at least 20 dB below that in the 100 kHz bandwidth within the band that contains the highest level of the desired power, based on either an RF conducted or a radiated measurement, provided that the transmitter demonstrates compliance with the peak conducted power limits. If the transmitter complies with the conducted power limits based on the use of root-mean-square averaging over a time interval, as permitted undersection 5.4(d), the attenuation required shall be 30 dB instead of 20 dB. Attenuation below the general field strength limits specified in RSS-Gen is not required.

7.4.3 Test Configuration

Test according to clause 6.1 radio frequency test setup

7.4.4 Test Procedure

The transmitter output (antenna port) was connected to the spectrum analyzer

- **Reference level measurement**

Establish a reference level by using the following procedure:
Set instrument center frequency to DTS channel center frequency.
Set the span to ≥ 1.5 times the DTS bandwidth.
Set the RBW = 100 kHz.
Set the VBW ≥ 3 x RBW.
Set Detector = peak.
Set Sweep time = auto couple.
Set Trace mode = max hold.
Allow trace to fully stabilize.
Use the peak marker function to determine the maximum PSD level.
Note that the channel found to contain the maximum PSD level can be used to establish the reference level.

- **Emission level measurement**

Set the center frequency and span to encompass frequency range to be measured.
Set the RBW = 100 kHz.
Set the VBW =300 kHz.
Set Detector = peak
Sweep time = auto couple.
Trace mode = max hold.
Allow trace to fully stabilize.
Use the peak marker function to determine the maximum amplitude level.
Ensure that the amplitude of all unwanted emissions outside of the authorized frequency band (excluding restricted frequency bands) are attenuated by at least the minimum requirements . Report the three highest emissions relative to the limit.

7.4.5 Test Results

Note: The module of this prototype has been certified, and the data of the module refers to the original report: RFBARR-WTW-P21100969.

7.5 RADIATED EMISSION

7.5.1 Applicable Standard

According to FCC Part 15.247(d) and 15.209 and KDB 558074 D01 15.247 Meas Guidance v05r02

7.5.2 Conformance Limit

According to FCC Part 15.247(d): radiated emissions which fall in the restricted bands, as defined in §15.205(a), must also comply with the radiated emission limits specified in §15.209(a) (see §15.205(c)).
According to FCC Part15.205, Restricted bands

MHz	MHz	MHz	GHz
0.090-0.110	16.42-16.423	399.9-410	4.5-5.15
10.495-0.505	16.69475-16.69525	608-614	5.35-5.46
2.1735-2.1905	16.80425-16.80475	960-1240	7.25-7.75
4.125-4.128	25.5-25.67	1300-1427	8.025-8.5
4.17725-4.17775	37.5-38.25	1435-1626.5	9.0-9.2
4.20725-4.20775	73-74.6	1645.5-1646.5	9.3-9.5
6.215-6.218	74.8-75.2	1660-1710	10.6-12.7
6.26775-6.26825	123-138	2200-2300	14.47-14.5
8.291-8.294	149.9-150.05	2310-2390	15.35-16.2
8.362-8.366	156.52475-156.52525	2483.5-2500	17.7-21.4
8.37625-8.38675	156.7-156.9	2690-2900	22.01-23.12
8.41425-8.41475	162.0125-167.17	3260-3267	23.6-24.0
12.29-12.293	167.72-173.2	3332-3339	31.2-31.8
12.51975-12.52025	240-285	3345.8-3358	36.43-36.5
12.57675-12.57725	322-335.4	3600-4400	(2)
13.36-13.41			

According to FCC Part15.205 the level of any transmitter spurious emission in Restricted bands shall not exceed the level of the emission specified in the following table

Restricted Frequency(MHz)	Field Strength (μV/m)	Field Strength (dBμV/m)	Measurement Distance
0.009-0.490	2400/F(KHz)	20 log (uV/m)	300
0.490-1.705	24000/F(KHz)	20 log (uV/m)	30
1.705-30	30	29.5	30
30-88	100	40	3
88-216	150	43.5	3
216-960	200	46	3
Above 960	500	54	3

7.5.3 Test Configuration

Test according to clause 6.2 radio frequency test setup

7.5.4 Test Procedure

This test is required for any spurious emission that falls in a Restricted Band, as defined in Section 15.205. It must be performed with the highest gain of each type of antenna proposed for use with the EUT. Use the following spectrum analyzer settings:
For Above 1GHz:
The EUT was placed on a turn table which is 1.5m above ground plane.
Maximum procedure was performed on the highest emissions to ensure EUT compliance.
Span = wide enough to fully capture the emission being measured
RBW = 1 MHz
VBW ≥ RBW
Sweep = auto
Detector function = peak
Trace = max hold
For Below 1GHz:

The EUT was placed on a turn table which is 0.8m above ground plane.
Maximum procedure was performed on the highest emissions to ensure EUT compliance.
Span = wide enough to fully capture the emission being measured
RBW = 100 kHz for
VBW ≥ RBW
Sweep = auto
Detector function = peak
Trace = max hold
For Below 30MHz:
The EUT was placed on a turn table which is 0.8m above ground plane.
Maximum procedure was performed on the highest emissions to ensure EUT compliance.
Span = wide enough to fully capture the emission being measured
RBW = 9kHz
VBW ≥ RBW
Sweep = auto
Detector function = peak
Trace = max hold
For Below 150KHz:
The EUT was placed on a turn table which is 0.8m above ground plane.
Maximum procedure was performed on the highest emissions to ensure EUT compliance.
Span = wide enough to fully capture the emission being measured
RBW = 200Hz
VBW ≥ RBW
Sweep = auto
Detector function = peak
Trace = max hold
Follow the guidelines in ANSI C63.10 with respect to maximizing the emission by rotating the EUT, measuring the emission while the EUT is situated in three orthogonal planes (if appropriate), adjusting the measurement antenna height and polarization, etc. A pre-amp and a high pass filter are required for this test, in order to provide the measuring system with sufficient sensitivity. Allow the trace to stabilize. The peak reading of the emission, after being corrected by the antenna factor, cable loss, pre-amp gain, etc., is the peak field strength, which must comply with the limit. Submit this data.
Now set the VBW to 10 Hz, while maintaining all of the other instrument settings. This peak level, once corrected, must comply with the limit. If the dwell time per channel of the hopping signal is less than 100 ms, then the reading obtained with the 10 Hz VBW may be further adjusted by a “duty cycle correction factor”, derived from 20log(dwell time/100 ms), in an effort to demonstrate compliance with the limit. Submit this data.
Repeat above procedures until all frequency measured was complete.

7.5.5 Test Results

Temperature:	28.1° C
Relative Humidity:	43%
ATM Pressure:	1011 mbar

■ Spurious Emission below 30MHz(9KHz to 30MHz)

Freq. (MHz)	Ant.Pol. H/V	Emission Level(dBuV/m)		Limit 3m(dBuV/m)		Margin(dB)	
		PK	AV	PK	AV	PK	AV
--	--	--	--	--	--	--	--

Note: the amplitude of spurious emission that is attenuated by more than 20dB below the permissible limit has no need to be reported.
Distance extrapolation factor =40log(Specific distance/ test distance)(dB);
Limit line=Specific limits(dBuV) + distance extrapolation factor

- Spurious Emission Above 1GHz(1GHz to 25GHz)
- All antenna modes 2.4G 802.11b/g/n have been tested, and the worst result recorded was report as below:

Test mode: 802.11 b Frequency: Channel 1: 2412MHz

Freq. (MHz)	Ant.Pol.	Emission Level(dBuV/m)		Limit 3m(dBuV/m)		Margin(dB)	
	H/V	PK	AV	PK	AV	PK	AV
4233.75	V	47.57	30.81	74.00	54.00	26.43	23.19
8373.75	V	58.05	38.08	74.00	54.00	15.95	15.92
16921.8	V	67.57	48.36	74.00	54.00	6.43	5.64
4215	H	47.54	31.53	74.00	54.00	26.46	22.47
8336.25	H	58.07	37.69	74.00	54.00	15.93	16.31
17471.2	H	67.65	50.02	74.00	54.00	6.35	3.98

Test mode: 802.11 b Frequency: Channel 6: 2437MHz

Freq. (MHz)	Ant.Pol.	Emission Level(dBuV/m)		Limit 3m(dBuV/m)		Margin(dB)	
	H/V	PK	AV	PK	AV	PK	AV
4209.37	V	48.23	30.87	74.00	54.00	25.77	23.13
8368.12	V	58.57	38.00	74.00	54.00	15.43	16.00
16972.5	V	67.60	49.43	74.00	54.00	6.40	4.57
4177.5	H	47.48	30.67	74.00	54.00	26.52	23.33
8326.87	H	58.87	38.46	74.00	54.00	15.13	15.54
17218.1	H	67.52	48.91	74.00	54.00	6.48	5.09

Test mode: 802.11 b Frequency: Channel 11: 2462MHz

Freq. (MHz)	Ant.Pol.	Emission Level(dBuV/m)		Limit 3m(dBuV/m)		Margin(dB)	
	H/V	PK	AV	PK	AV	PK	AV
4216.87	V	48.22	31.20	74.00	54.00	25.78	22.80
8349.37	V	58.61	38.75	74.00	54.00	15.39	15.25
17454.3	V	67.67	49.69	74.00	54.00	6.33	4.31
4235.62	H	47.95	31.38	74.00	54.00	26.05	22.62
8448.75	H	58.16	38.24	74.00	54.00	15.84	15.76
17814.3	H	67.63	47.63	74.00	54.00	6.37	6.37

Note: (1) All Readings are Peak Value (VBW=3MHz) and Average Value (VBW=10Hz).
(2) Corrected Reading= Reading Level+Correct Factor.
(3) Correct Factor= Ant_F + Cab_L - Preamp
(4) Margin = Limit - Corrected Reading
(5)The reading of emissions are attenuated more than 20dB below the permissible limits or the field strength is too small to be measured.

■ Spurious Emission in Restricted Band 2310-2390MHz and 2483.5-2500MHz
All modes 2.4G 802.11b/g/n have been tested, and the worst result recorded was report as below:

Test mode:	802.11AC	Frequency:	Channel 1: 2412MHz

Frequency (MHz)	Polarity	PK(dBuV/m) (VBW=3MHz)	Limit 3m (dBuV/m)	AV(dBuV/m) (VBW=10Hz)	Limit 3m (dBuV/m)
2388.42	H	44.98	74.00	38.77	54.00
2389.25	V	44.98	74.00	38.26	54.00

Test mode:	802.11 AC	Frequency:	Channel 11: 2462MHz

Frequency (MHz)	Polarity	PK(dBuV/m) (VBW=3MHz)	Limit 3m (dBuV/m)	AV(dBuV/m) (VBW=10Hz)	Limit 3m (dBuV/m)
2483.86	H	45.81	74.00	38.84	54.00
2484.39	V	46.44	74.00	38.39	54.00

Note: (1) All Readings are Peak Value (VBW=3MHz) and Average Value (VBW=10Hz).
(2) Corrected Reading= Reading Level+Correct Factor.
(3) Correct Factor= Ant_F + Cab_L - Preamp
(4) Margin = Limit - Corrected Reading
(5)The reading of emissions are attenuated more than 20dB below the permissible limits or the field strength is too small to be measured.

Spurious Emission in Restricted Band 2310-2390MHz				
Test Model	☐802.11b	☐802.11g	☒802.11n(HT20)	☐802.11n(HT40)
	☒Channel 1:2412MHz VBW=3MHz	☐Channel 3: 2422MHz		Polarity: H

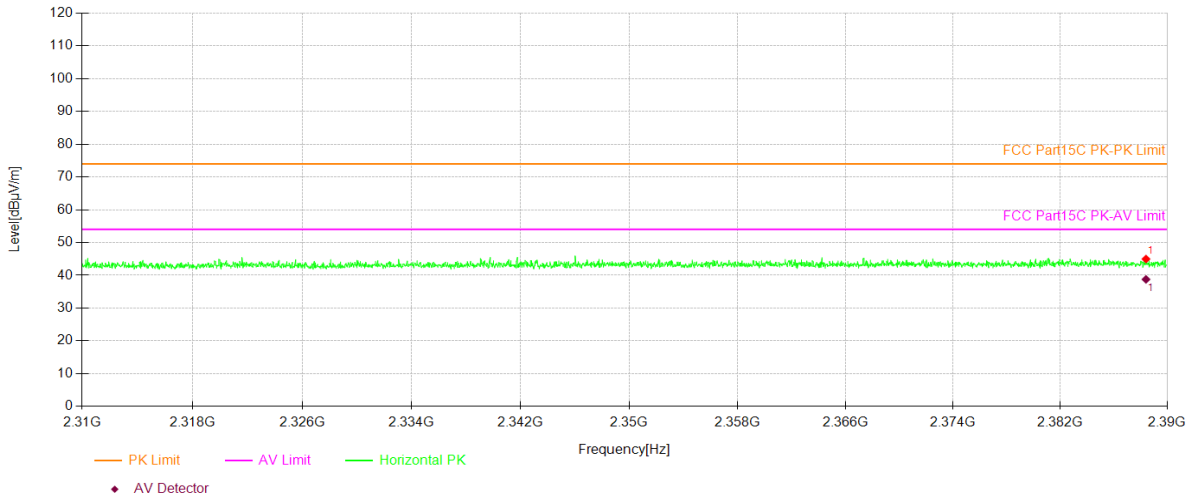

Spurious Emission in Restricted Band 2310-2390MHz				
Test Model	☐802.11b	☐802.11g	☒802.11n(HT20)	☐802.11n(HT40)
	☒Channel 1:2412MHz VBW=3MHz	☐Channel 3: 2422MHz		Polarity:V

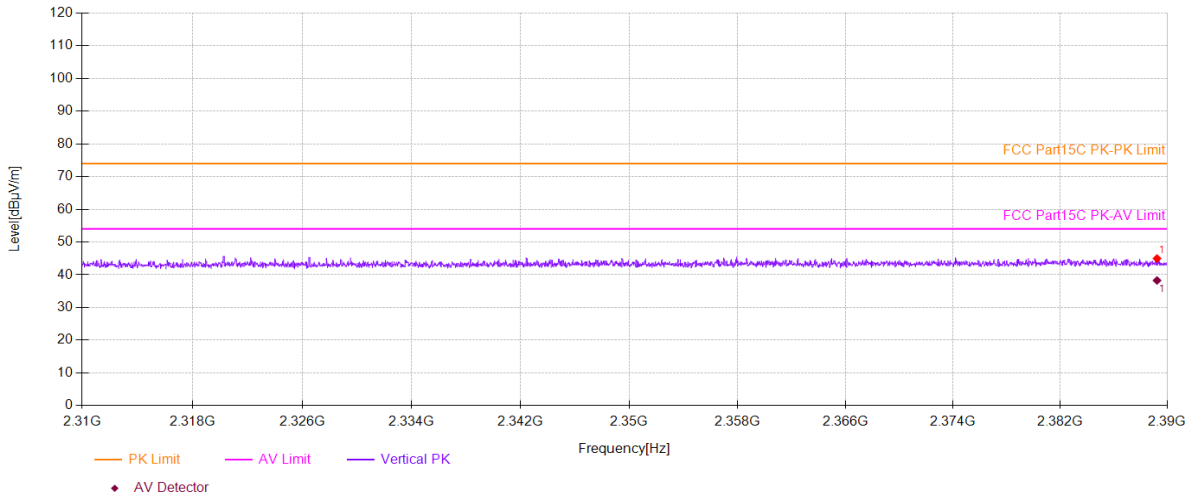

Spurious Emission in Restricted Band 2483.5-2500MHz				
Test Model	☐802.11b	☐802.11g	☒802.11n(HT20)	☐ 802.11n(HT40)
	☒Channel 11: 2462MHz	☐Channel 9: 2452MHz	Polarity: H	
	VBW=3MHz			

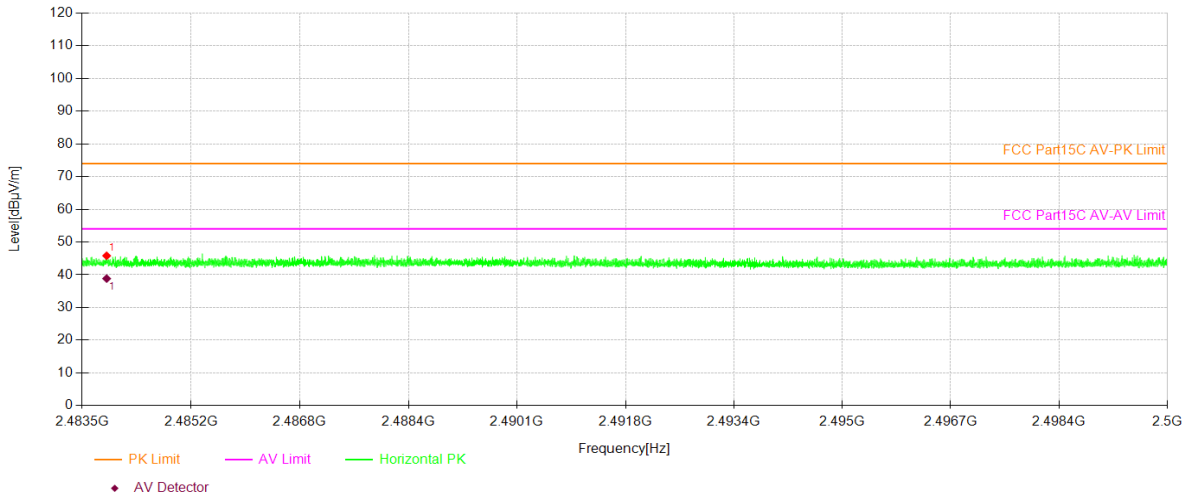

Spurious Emission in Restricted Band2483.5-2500MHz				
Test Model	☐802.11b	☐802.11g	☒802.11n(HT20)	☐802.11n(HT40)
	☒Channel 11: 2462MHz	☐Channel 9: 2452MHz	Polarity: V	
	VBW=3MHz			

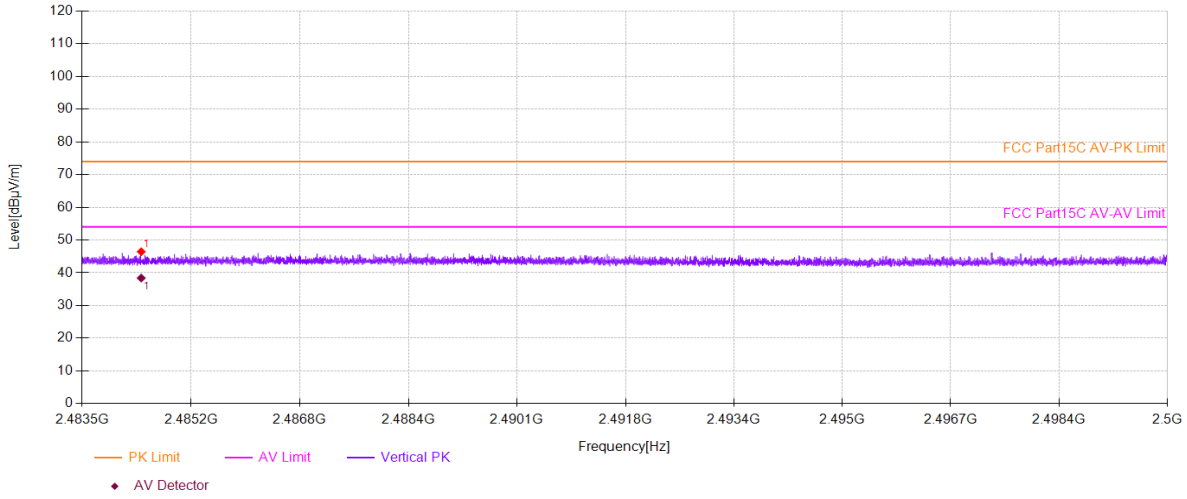

■ Spurious Emission below 1GHz (30MHz to 1GHz)

All antenna modes 2.4G 802.11b/g/n have been tested, and the worst result 802.11n20 recorded was report as below:

Mode:	B 2412

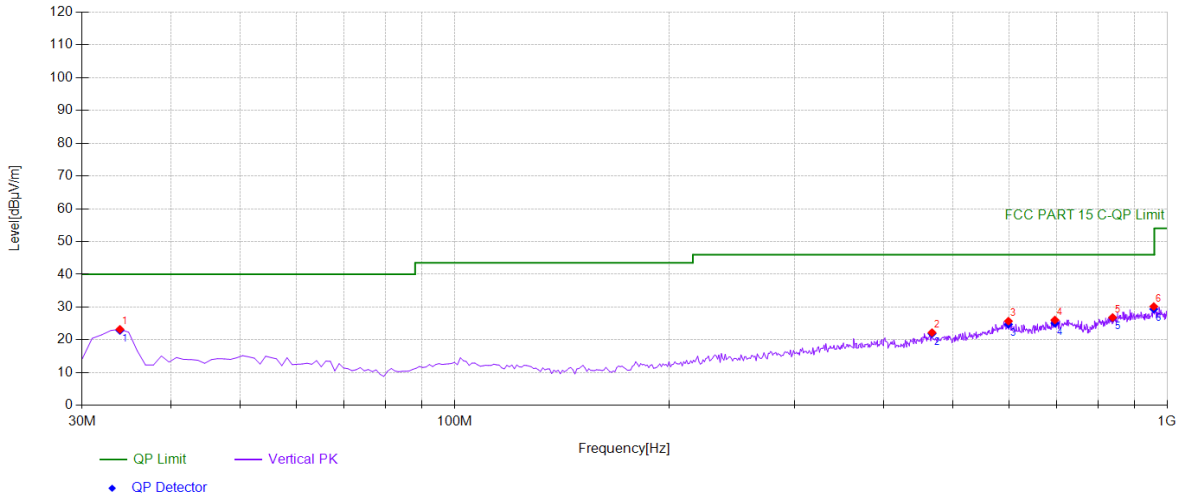

Suspected Data List								
NO.	Freq. [MHz]	Reading [dBμV]	Factor [dB/m]	Level [dBμV/m]	Detector	Limit [dBμV/m]	Margin [dB]	Polarity
1	33.8839	34.33	-11.09	23.24	PK	40.00	16.76	Vertical
2	467.907	25.37	-3.13	22.24	PK	46.00	23.76	Vertical
3	598.989	25.17	0.56	25.73	PK	46.00	20.27	Vertical
4	696.086	25.34	0.73	26.07	PK	46.00	19.93	Vertical
5	838.818	24.70	2.14	26.84	PK	46.00	19.16	Vertical
6	958.248	26.38	3.81	30.19	PK	46.00	15.81	Vertical

Final Data List					
NO.	Freq. [MHz]	Factor [dB/m]	QP Value [dBμV/m]	QP Limit [dBμV/m]	QP Margin [dB]
1	33.8839	-11.09	22.90	40.00	17.10
2	467.9079	-3.13	21.90	46.00	24.10
3	598.989	0.56	24.75	46.00	21.25
4	696.0861	0.73	25.09	46.00	20.91
5	838.8188	2.14	26.70	46.00	19.30
6	958.2482	3.81	29.40	46.00	16.60

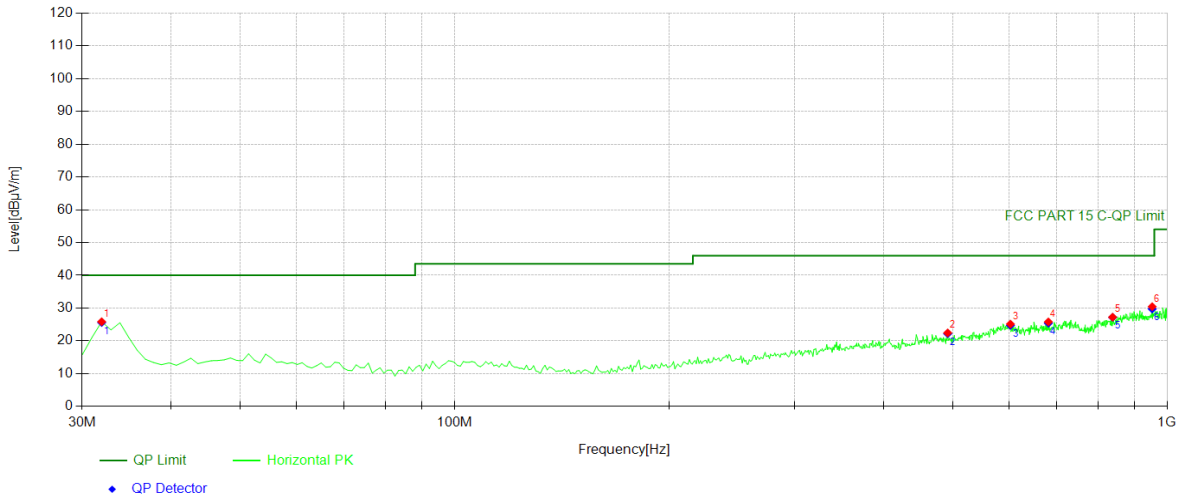

Suspected Data List								
NO.	Freq. [MHz]	Reading [dBµV]	Factor [dB/m]	Level [dBµV/m]	Detector	Limit [dBµV/m]	Margin [dB]	Polarity
1	31.9419	37.25	-11.39	25.86	PK	40.00	14.14	Horizontal
2	492.182	25.48	-3.03	22.45	PK	46.00	23.55	Horizontal
3	602.872	24.71	0.43	25.14	PK	46.00	20.86	Horizontal
4	681.521	25.61	0.20	25.81	PK	46.00	20.19	Horizontal
5	838.818	25.10	2.14	27.24	PK	46.00	18.76	Horizontal
6	953.393	26.88	3.58	30.46	PK	46.00	15.54	Horizontal

Final Data List					
NO.	Freq. [MHz]	Factor [dB/m]	QP Value [dBµV/m]	QP Limit [dBµV/m]	QP Margin [dB]
1	31.9419	-11.39	25.60	40.00	14.40
2	492.1822	-3.03	22.19	46.00	23.81
3	602.8729	0.43	24.71	46.00	21.29
4	681.5215	0.20	25.38	46.00	20.62
5	838.8188	2.14	27.17	46.00	18.83
6	953.3934	3.58	29.75	46.00	16.25

Mode:	B 2437

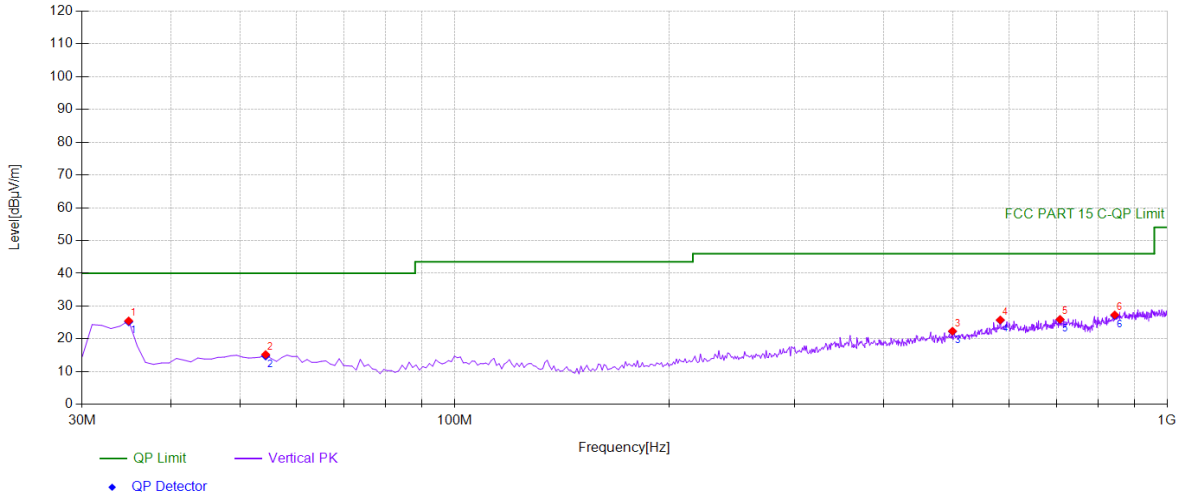

Suspected Data List								
NO.	Freq. [MHz]	Reading [dBµV]	Factor [dB/m]	Level [dBµV/m]	Detector	Limit [dBµV/m]	Margin [dB]	Polarity
1	34.8549	36.45	-10.94	25.51	PK	40.00	14.49	Vertical
2	54.2743	24.39	-9.15	15.24	PK	40.00	24.76	Vertical
3	499.95	25.43	-3.07	22.36	PK	46.00	23.64	Vertical
4	583.453	25.95	-0.16	25.79	PK	46.00	20.21	Vertical
5	707.737	24.93	1.03	25.96	PK	46.00	20.04	Vertical
6	844.644	24.99	2.35	27.34	PK	46.00	18.66	Vertical

Final Data List					
NO.	Freq. [MHz]	Factor [dB/m]	QP Value [dBµV/m]	QP Limit [dBµV/m]	QP Margin [dB]
1	34.8549	-10.94	25.22	40.00	14.78
2	54.2743	-9.15	14.79	40.00	25.21
3	499.95	-3.07	22.26	46.00	23.74
4	583.4535	-0.16	25.69	46.00	20.31
5	707.7377	1.03	25.86	46.00	20.14
6	844.6446	2.35	27.08	46.00	18.92

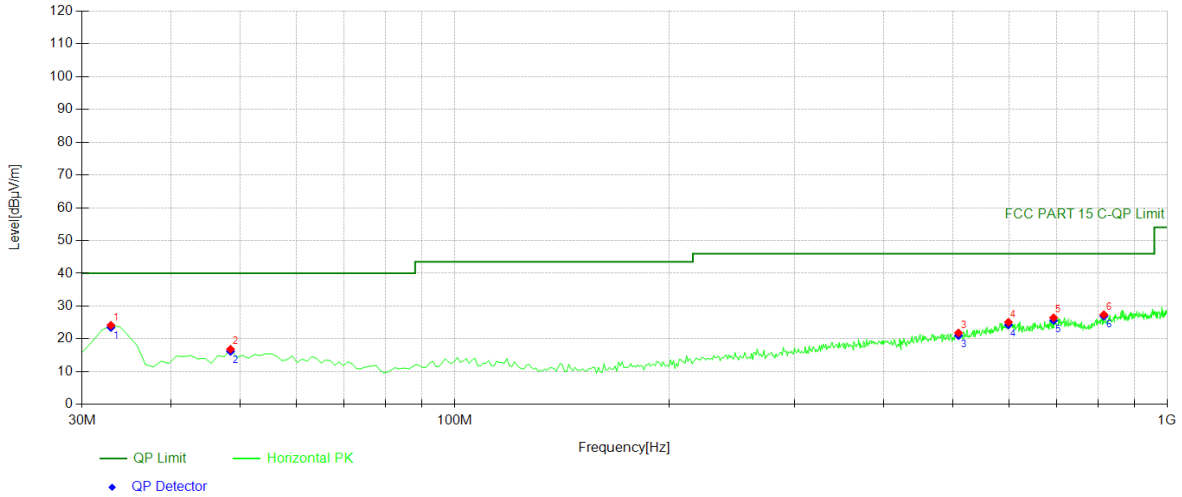

Suspected Data List								
NO.	Freq. [MHz]	Reading [dBµV]	Factor [dB/m]	Level [dBµV/m]	Detector	Limit [dBµV/m]	Margin [dB]	Polarity
1	32.9129	35.40	-11.24	24.16	PK	40.00	15.84	Horizontal
2	48.4484	25.71	-8.84	16.87	PK	40.00	23.13	Horizontal
3	509.659	24.71	-2.88	21.83	PK	46.00	24.17	Horizontal
4	598.989	24.54	0.56	25.10	PK	46.00	20.90	Horizontal
5	693.173	25.83	0.62	26.45	PK	46.00	19.55	Horizontal
6	815.515	25.77	1.63	27.40	PK	46.00	18.60	Horizontal

Final Data List					
NO.	Freq. [MHz]	Factor [dB/m]	QP Value [dBµV/m]	QP Limit [dBµV/m]	QP Margin [dB]
1	32.9129	-11.24	23.48	40.00	16.52
2	48.4484	-8.84	16.19	40.00	23.81
3	509.6597	-2.88	20.99	46.00	25.01
4	598.989	0.56	24.26	46.00	21.74
5	693.1732	0.62	25.61	46.00	20.39
6	815.5155	1.63	26.92	46.00	19.08

Mode:	B 2462

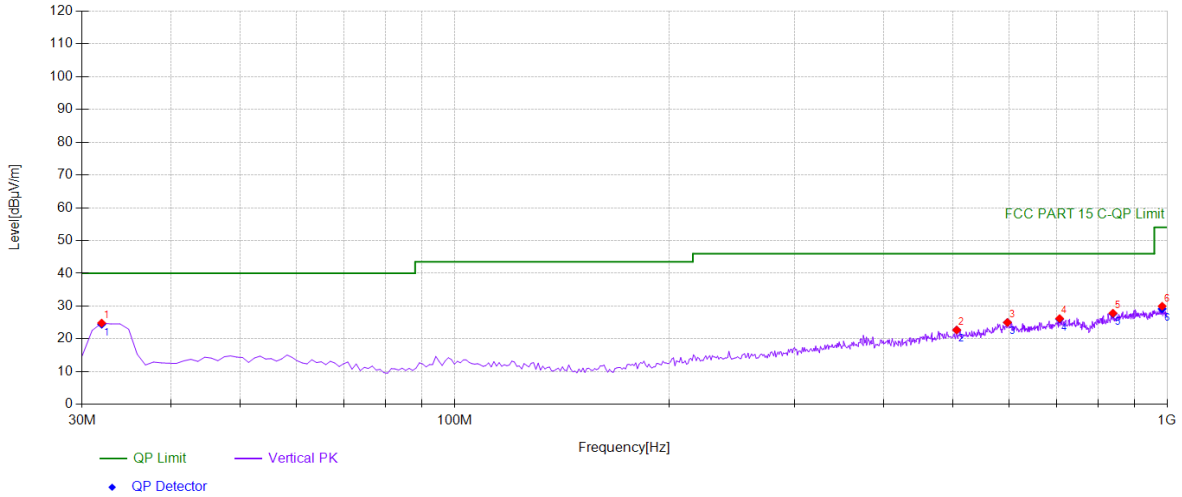

Suspected Data List								
NO.	Freq. [MHz]	Reading [dBµV]	Factor [dB/m]	Level [dBµV/m]	Detector	Limit [dBµV/m]	Margin [dB]	Polarity
1	31.9419	36.23	-11.39	24.84	PK	40.00	15.16	Vertical
2	506.746	25.65	-2.94	22.71	PK	46.00	23.29	Vertical
3	597.047	24.57	0.46	25.03	PK	46.00	20.97	Vertical
4	706.766	25.20	1.02	26.22	PK	46.00	19.78	Vertical
5	839.789	25.68	2.16	27.84	PK	46.00	18.16	Vertical
6	984.464	26.14	3.83	29.97	PK	54.00	24.03	Vertical

Final Data List					
NO.	Freq. [MHz]	Factor [dB/m]	QP Value [dBµV/m]	QP Limit [dBµV/m]	QP Margin [dB]
1	31.9419	-11.39	24.47	40.00	15.53
2	506.7467	-2.94	22.70	46.00	23.30
3	597.047	0.46	25.02	46.00	20.98
4	706.7668	1.02	26.04	46.00	19.96
5	839.7898	2.16	27.66	46.00	18.34
6	984.4645	3.83	29.15	54.00	24.85

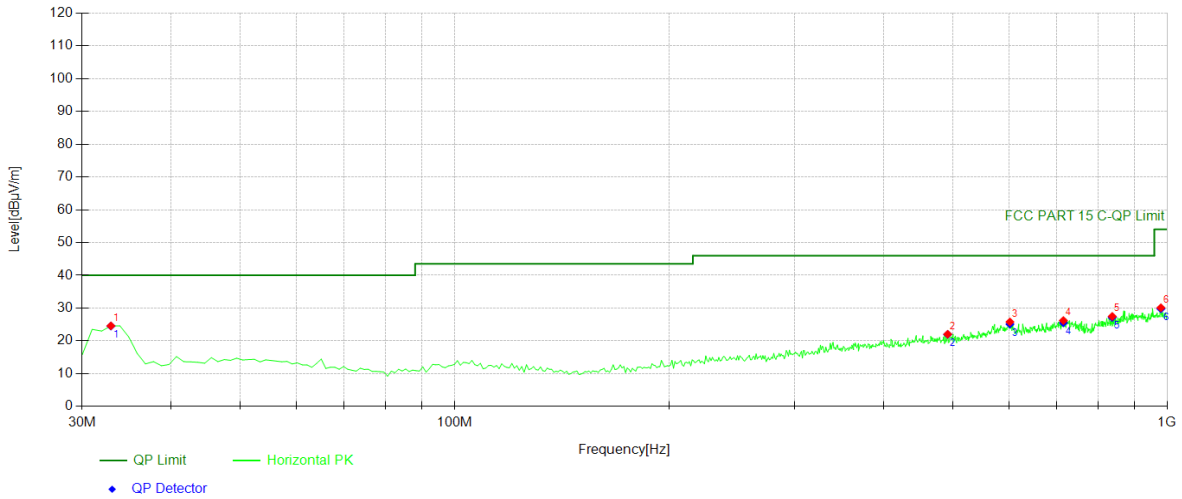

Suspected Data List								
NO.	Freq. [MHz]	Reading [dBµV]	Factor [dB/m]	Level [dBµV/m]	Detector	Limit [dBµV/m]	Margin [dB]	Polarity
1	32.9129	35.83	-11.24	24.59	PK	40.00	15.41	Horizontal
2	492.182	25.07	-3.03	22.04	PK	46.00	23.96	Horizontal
3	601.901	25.31	0.49	25.80	PK	46.00	20.20	Horizontal
4	715.505	25.18	1.03	26.21	PK	46.00	19.79	Horizontal
5	837.847	25.36	2.12	27.48	PK	46.00	18.52	Horizontal
6	980.580	26.31	3.82	30.13	PK	54.00	23.87	Horizontal

Final Data List					
NO.	Freq. [MHz]	Factor [dB/m]	QP Value [dBµV/m]	QP Limit [dBµV/m]	QP Margin [dB]
1	32.9129	-11.24	24.53	40.00	15.47
2	492.1822	-3.03	21.98	46.00	24.02
3	601.9019	0.49	25.10	46.00	20.90
4	715.5055	1.03	25.51	46.00	20.49
5	837.8478	2.12	27.14	46.00	18.86
6	980.5806	3.82	29.79	54.00	24.21

7.6 CONDUCTED EMISSION TEST

7.6.1 Applicable Standard

According to FCC Part 15.207(a)

7.6.2 Conformance Limit

Conducted Emission Limit

Frequency(MHz)	Quasi-peak	Average
0.15-0.5	66-56	56-46
0.5-5.0	56	46
5.0-30.0	60	50

Note: 1. The lower limit shall apply at the transition frequencies
2. The limit decreases in line with the logarithm of the frequency in the range of 0.15 to 0.50MHz.

7.6.3 Test Configuration

Test according to clause 6.3 conducted emission test setup

7.6.4 Test Procedure

The EUT was placed on a table which is 0.8m above ground plane.
Maximum procedure was performed on the highest emissions to ensure EUT compliance.
Repeat above procedures until all frequency measured were complete.

7.6.5 Test Results

Pass

The AC120V &240V voltage have been tested, and the worst result recorded was report as below:

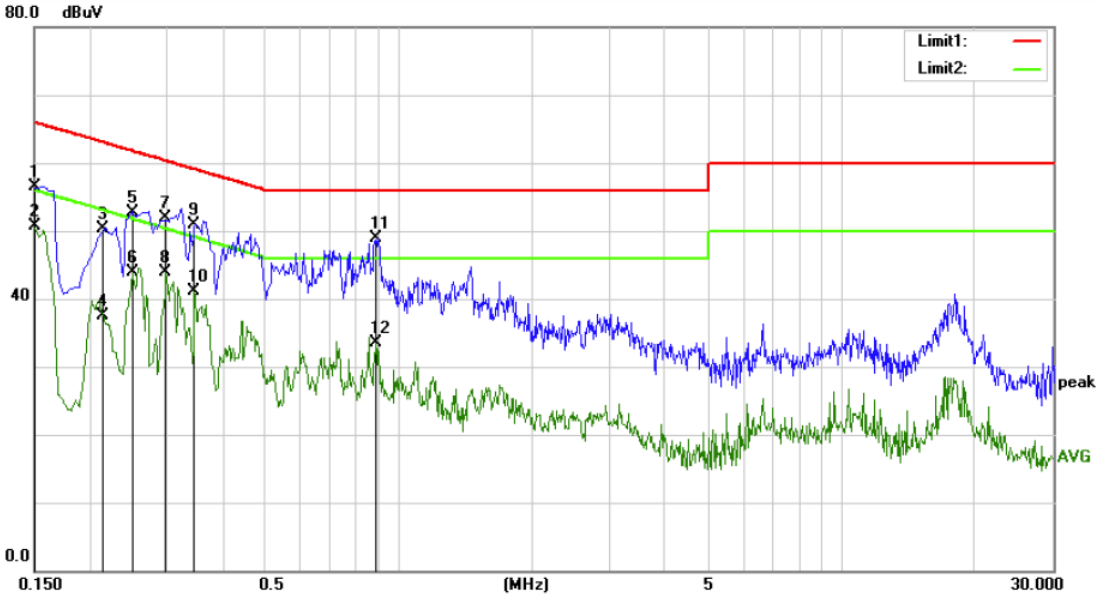

Site Conduction #1 Phase: N Temperature: 23.8

Limit: (CE)FCC PART 15 class B_QP Power: AC 120V/60Hz Humidity: 54 %

No.	Mk.	Freq.	Reading Level	Correct Factor	Measure-ment	Limit	Over		
		MHz	dBuV	dB	dBuV	dBuV	dB	Detector	Comment
1		0.1500	37.01	19.43	56.44	66.00	-9.56	QP	
2	*	0.1500	31.31	19.43	50.74	56.00	-5.26	AVG	
3		0.2140	31.04	19.30	50.34	63.05	-12.71	QP	
4		0.2140	18.30	19.30	37.60	53.05	-15.45	AVG	
5		0.2500	33.58	19.22	52.80	61.76	-8.96	QP	
6		0.2500	24.61	19.22	43.83	51.76	-7.93	AVG	
7		0.2980	32.84	19.12	51.96	60.30	-8.34	QP	
8		0.2980	24.78	19.12	43.90	50.30	-6.40	AVG	
9		0.3460	31.72	19.09	50.81	59.06	-8.25	QP	
10		0.3460	21.93	19.09	41.02	49.06	-8.04	AVG	
11		0.8860	30.01	18.91	48.92	56.00	-7.08	QP	
12		0.8860	14.53	18.91	33.44	46.00	-12.56	AVG	

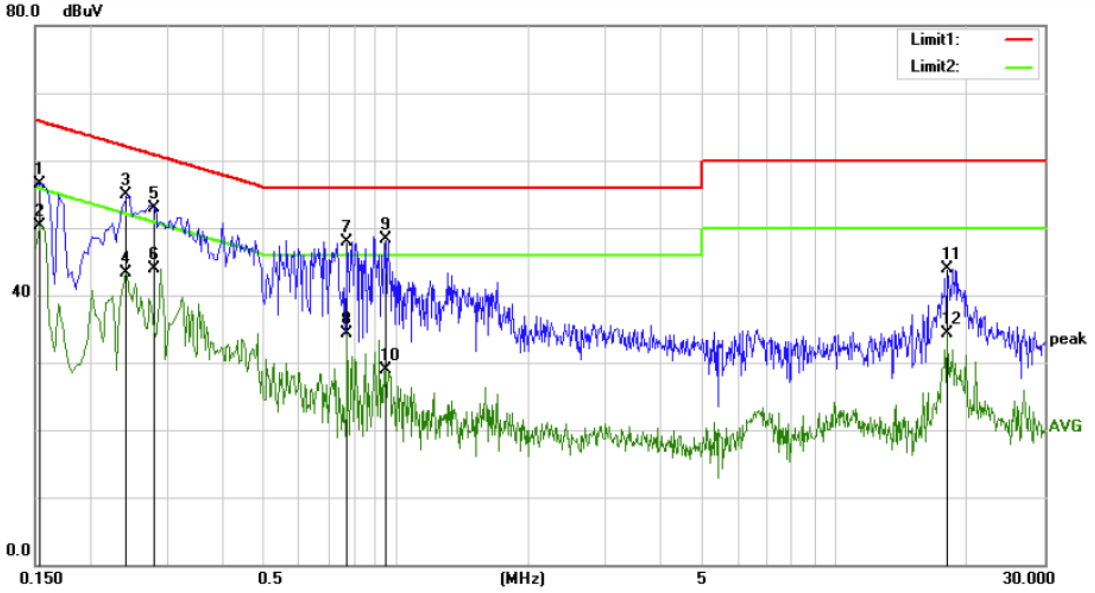

Site Conduction #1 Phase: *L1* Temperature: 23.8

Limit: (CE)FCC PART 15 class B_QP Power: AC 120V/60Hz Humidity: 54 %

No.	Mk.	Freq.	Reading Level	Correct Factor	Measure-ment	Limit	Over		
		MHz	dBuV	dB	dBuV	dBuV	dB	Detector	Comment
1		0.1540	37.06	19.42	56.48	65.78	-9.30	QP	
2	*	0.1540	30.94	19.42	50.36	55.78	-5.42	AVG	
3		0.2420	35.73	19.24	54.97	62.03	-7.06	QP	
4		0.2420	24.06	19.24	43.30	52.03	-8.73	AVG	
5		0.2803	33.82	19.16	52.98	60.81	-7.83	QP	
6		0.2803	24.77	19.16	43.93	50.81	-6.88	AVG	
7		0.7740	28.87	18.94	47.81	56.00	-8.19	QP	
8		0.7740	15.28	18.94	34.22	46.00	-11.78	AVG	
9		0.9460	29.44	18.90	48.34	56.00	-7.66	QP	
10		0.9460	9.93	18.90	28.83	46.00	-17.17	AVG	
11		17.9540	24.77	19.21	43.98	60.00	-16.02	QP	
12		17.9540	15.19	19.21	34.40	50.00	-15.60	AVG	

7.7 ANTENNA APPLICATION

7.7.1 Antenna Requirement

Standard	Requirement
FCC CRF Part15.203	An intentional radiator shall be designed to ensure that no antenna other than that furnished by the responsible party shall be used with the device. The use of a permanently attached antenna or of an antenna that uses a unique coupling to the intentional radiator shall be considered sufficient to comply with the provisions of this section. The manufacturer may design the unit so that a broken antenna can be replaced by the user, but the use of a standard antenna jack or electrical connector is prohibited. This requirement does not apply to carrier current devices or to devices operated under the provisions of §15.211, §15.213, §15.217,§15.219, or §15.221. Further, this requirement does not apply to intentional radiators that must be professionally installed, such as perimeter protection systems and some field disturbance sensors, or to other intentional radiators which, in accordance with §15.31(d), must be measured at the installation site. However, the installer shall be responsible for ensuring that the proper antenna is employed so that the limits in this part are not exceeded.

For intentional device, according to FCC 47 CFR Section 15.203, an intentional radiator shall be designed to ensure that no antenna other than that furnished by the responsible party shall be used with the device. And according to FCC 47 CFR Section 15.247 (b), if transmitting antennas of directional gain greater than 6dBi are used, the power shall be reduced by the amount in dB that the directional gain of the antenna exceeds 6dBi..

7.7.2 Result

PASS.

-
  - ☒ Antenna uses a permanently attached antenna which is not replaceable.
  - ☐ Not using a standard antenna jack or electrical connector for antenna replacement
  - ☐ The antenna has to be professionally installed (please provide method of installation)

  Which in accordance to section 15.203, please refer to the internal photos

Detail of factor for radiated emission

Frequency(MHz)	Ant_F(dB)	Cab_L(dB)	Preamp(dB)	Correct Factor(dB)
0.009	20.6	0.03	\	20.63
0.15	20.7	0.1	\	20.8
1	20.9	0.15	\	21.05
10	20.1	0.28	\	20.38
30	18.8	0.45	\	19.25
30	11.7	0.62	27.9	-15.58
100	12.5	1.02	27.8	-14.28
300	12.9	1.91	27.5	-12.69
600	19.2	2.92	27	-4.88
800	21.1	3.54	26.6	-1.96
1000	22.3	4.17	26.2	0.27
1000	25.6	1.76	41.4	-14.04
3000	28.9	3.27	43.2	-11.03
5000	31.1	4.2	44.6	-9.3
8000	36.2	5.95	44.7	-2.55
10000	38.4	6.3	43.9	0.8
12000	38.5	7.14	42.3	3.34
15000	40.2	8.15	41.4	6.95
18000	45.4	9.02	41.3	13.12
18000	37.9	1.81	47.9	-8.19
21000	37.9	1.95	48.7	-8.85
25000	39.3	2.01	42.8	-1.49
28000	39.6	2.16	46.0	-4.24
31000	41.2	2.24	44.5	-1.06
34000	41.5	2.29	46.6	-2.81
37000	43.8	2.30	46.4	-0.3
40000	43.2	2.50	42.2	3.5

*** End of Report ***