TEST REPORT

Product Name	**:**	**Mini PC**
Model Number	**:**	**M2 Air-350, M2 Air-***(* = “0-9” 、”A-Z”、“-”、” blank”)**
FCC ID	**:**	**2A49R-M2AIR**

Prepared for	:	MICRO COMPUTER (HK) TECH LIMITED
Address	:	Unit 1908, 19/F, Tower 2, Grand Central Plaza, 138 Shatin Rural Committee Road, Shatin, N.T., H.K
Prepared by	:	EMTEK (SHENZHEN) CO., LTD.
Address	:	Building 69, Majialong Industry Zone, Nanshan District, Shenzhen, Guangdong, China Tel: (0755) 26954280 Fax: (0755) 26954282

Report Number	:	ENS2606160340W00103R
Date(s) of Tests	:	June 16, 2026 to July 31, 2026
Date of issue	:	July 31, 2026

TABLE OF CONTENTS

1 TEST RESULT CERTIFICATION 3
2 EUT TECHNICAL DESCRIPTION 5
3 SUMMARY OF TEST RESULT 6
4 TEST METHODOLOGY 7
4.1 GENERAL DESCRIPTION OF APPLIED STANDARDS 7
4.2 MEASUREMENT EQUIPMENT USED 7
4.3 DESCRIPTION OF TEST MODES 8
5 FACILITIES AND ACCREDITATIONS 9
5.1 FACILITIES 9
5.2 EQUIPMENT 9
5.3 LABORATORY ACCREDITATIONS AND LISTINGS 9
6 TEST SYSTEM UNCERTAINTY 10
7 SETUP OF EQUIPMENT UNDER TEST 11
7.1 RADIO FREQUENCY TEST SETUP 1 11
7.2 RADIO FREQUENCY TEST SETUP 2 11
7.3 CONDUCTED EMISSION TEST SETUP 14
7.4 BLOCK DIAGRAM CONFIGURATION OF TEST SYSTEM 15
7.5 SUPPORT EQUIPMENT 15
8 TEST REQUIREMENTS 16
1.1 ON TIME AND DUTY CYCLE 16
8.1 DTS 6DB BANDWIDTH 17
8.2 DTS 99% BANDWIDTH 18
8.3 MAXIMUM PEAK CONDUCTED OUTPUT POWER 19
8.4 MAXIMUM POWER SPECTRAL DENSITY 20
8.5 UNWANTED EMISSIONS IN NON-RESTRICTED FREQUENCY BANDS 21
8.6 RADIATED SPURIOUS EMISSION 23
8.7 CONDUCTED EMISSION TEST 37
8.8 ANTENNA APPLICATION 40

1 TEST RESULT CERTIFICATION

Applicant	:	MICRO COMPUTER (HK) TECH LIMITED
Address	:	Unit 1908, 19/F, Tower 2, Grand Central Plaza, 138 Shatin Rural Committee Road, Shatin, N.T., H.K
Manufacturer	:	MICRO COMPUTER (HK) TECH LIMITED
Address	:	Unit 1908, 19/F, Tower 2, Grand Central Plaza, 138 Shatin Rural Committee Road, Shatin, N.T., H.K
EUT	:	Mini PC
Model Name	:	M2 Air-350, M2 Air-***(* = “0-9” 、” A-Z”、 “-”、” blank”)
Trademark	:	N/A

Measurement Procedure Used:

APPLICABLE STANDARDS	
STANDARD	**TEST RESULT**
FCC 47 CFR Part 2 , Subpart J FCC 47 CFR Part 15, Subpart C	**PASS**
IC RSS-GEN, Issue 5(04-2018)+A1(03-2019)+A2(02-2021) IC RSS-247 Issue 3(08-2023)	**PASS**

The above equipment was tested by EMTEK(SHENZHEN) CO., LTD. The test data, data evaluation, test procedures, and equipment configurations shown in this report were made in accordance with the procedures given in ANSI C63.10 (2013) and the energy emitted by the sample EUT tested as described in this report is in compliance with the requirements of FCC Rules Part 2, Part 15.247, IC RSS-247 Issue 3 and IC RSS-GEN, Issue 5.

The test results of this report relate only to the tested sample identified in this report.

Date of Test : June 16, 2026 to July 31, 2026

Prepared by : Liang Junming /Editor

Reviewer : Xia Lilu/Supervisor

Approve & Authorized Signer : Wang Li/Manager

EMTEK (SHENZHEN) CO., LTD. TESTING

Modified History

Version	Report No.	Revision Date	Summary
V1.0	ENS2606160340W00103R	/	Original Report

2 EUT TECHNICAL DESCRIPTION

Characteristics	Description
Product:	Mini PC
Model Number:	M2 Air-350, M2 Air-***(* = “0-9” 、”A-Z”、 “-”、”blank”)
Sample Number:	2#
IEEE 802.11 WLAN Mode Supported:	802.11b 802.11g 802.11n(20MHz channel bandwidth) 802.11n(40MHz channel bandwidth) 802.11ax(20MHz channel bandwidth) 802.11ax(40MHz channel bandwidth)
Modulation:	DSSS with DBPSK/DQPSK/CCK for 802.11b; OFDM with BPSK/QPSK/16QAM/64QAM for 802.11g/n; OFDM with BPSK/QPSK/16QAM/64QAM/256QAM/1024QAM for 802.11ax
Operating Frequency Range:	2412-2462MHz for 802.11b/g/n(HT20)/ax(HE20); 2422-2452MHz for 802.11n(HT40)/ax(HE40);
Number of Channels:	11 channels for 802.11b/g/n(HT20)/ax(HE20); 7 Channels for 802.11n(HT40)/ax(HE40);
Antenna Information:	Type: FPC Antenna ANT1 Gain: 1.60 dBi ANT2 Gain: 1.97 dB Note: The antenna information provided by the manufacturer will have a certain impact on the test results.
Power Supply:	DC 19V from adapter Input: AC 100-240V~2.5A 50/60HZ
Date of Received	May 27, 2025
Temperature Range	0°C ~ +35°C

Note: for more details, please refer to the User’s manual of the EUT.

3 SUMMARY OF TEST RESULT

FCC Part Clause	IC Part Clause	Test Parameter	Verdict	Remark
15.247(a)(2)	RSS-247 5.2(a) RSS-Gen 6.7	Emission Bandwidth	PASS	*
15.247(b)(3)	RSS-247 5.4(d) RSS-Gen 6.12	Maximum Peak Conducted Output Power	PASS	*
15.247(e)	RSS-247 5.2(b) RSS-Gen 6.12	Maximum Power Spectral Density Level	PASS	*
15.247(d)	RSS-247 5.5	Unwanted Emission Into Non-Restricted Frequency Bands	PASS	*
15.247(d)	RSS-247 5.5	Unwanted Emission Into Restricted Frequency Bands (conducted)	PASS	*
15.247(d) 15.209 15.205	RSS-Gen 8.9 RSS-Gen 8.10 RSS-Gen 6.13 RSS-247 3.3 RSS-247 5.5	Radiated Spurious Emission	PASS	
15.207	RSS-Gen 8.8	Conducted Emission Test	PASS	
15.203 15.247(b)	RSS-Gen 6.8 RSS-247 5.4	Antenna Application	PASS	
NOTE1: N/A (Not Applicable) NOTE2: According to FCC OET KDB 558074, the report use radiated measurements in the restricted frequency bands. In addition, the radiated test is also performed to ensure the emissions emanating from the device cabinet also comply with the applicable limits. NOTE3: * means that this item refers to module report 230523-08.TR16 of FCC ID: PD9BE200NG				

RELATED SUBMITTAL(S) / GRANT(S):

This submittal(s) (test report) is intended for FCC ID**: 2A49R-M2AIR** filing to comply with Section 15.247 of the FCC Part 15, Subpart C Rules.

This submittal(s) (test report) is intended for filing to comply with RSS-247 Rules.

4 TEST METHODOLOGY

4.1 GENERAL DESCRIPTION OF APPLIED STANDARDS

According to its specifications, the EUT must comply with the requirements of the following standards:
FCC 47 CFR Part 2, Subpart J
FCC 47 CFR Part 15, Subpart C
IC RSS-GEN, Issue 5(04-2018)+A1(03-2019)+A2(02-2021)
IC RSS-247 Issue 3(08-2023)
FCC KDB 558074 D01 15.247 Meas Guidance v05r02
FCC KDB 662911 D01 Multiple Transmitter Output v02r01

4.2 MEASUREMENT EQUIPMENT USED

Conducted Emission Test Equipment

Equipment	Manufacturer	Model No.	Serial No.	Last Cal.	Cal. Interval
Test Receiver	Rohde & Schwarz	ESCI	101384	2026/5/9	1 Year
L.I.S.N.	Rohde & Schwarz	ENV216	101161	2026/5/10	1 Year
L.I.S.N.	Kyoritsu	KNW-407	8-1492-9	2026/5/10	1 Year

For Spurious Emissions Test

Equipment	Manufacturer	Model No.	Serial No.	Last Cal.	Cal. Interval
EMI Test Receiver	Rohde & Schwarz	ESU 26	100154	2026/5/10	1 Year
Pre-Amplifie	Lunar EM	LNA30M3G-25	J10100000070	2026/5/10	1 Year
Bilog Antenna	Schwarzbeck	VULB9163	661	2025/5/18	2 Year
Horn antenna	Schwarzbeck	BBHA9120D	9120D-1178	2025/8/9	2 Year
Pre-Amplifie	SKET	LNPA_0118G-45	SK2019051801	2026/5/9	1 Year
Loop Antenna	Schwarzbeck	FMZB1519	1519-012	2025/5/13	2 Year
Spectrum Analyzer	Rohde & Schwarz	FSV40	100967	2026/5/8	1 Year
Horn antenna	Schwarzbeck	BBHA9120D	9120D-1178	2025/5/9	2 Year
Band reject Filter(50dB)	WI/DE	WRCGV-2400(2400-2485MHz)	2	2026/5/9	1 Year

For other test items:

Equipment	Manufacturer	Model No.	Serial No.	Last Cal.	Cal. Interval
RF Control Unit(Power Meter)	Tonscend	JS0806-2	22C8060567	2025/9/9	1Year
Spectrum Analyzer	Rohde & Schwarz	FSV30	103039	2026/5/8	1Year
Analog Signal Generator	KEYSIGHT	N5173B	MY59100520	2025/9/9	1Year
Frequency Extender	R&S	CMW-Z800A	100430	2025/9/9	1Year
Vector Signal Generator	KEYSIGHT	N5182B	MY59100922	2025/9/9	1Year
Temperature&Humidity test chamber	ESPEC	EL-02KA	12107166	2026/5/8	1 Year

4.3 DESCRIPTION OF TEST MODES

The EUT has been tested under its typical operating condition.
The EUT configuration for testing is installed on RF field strength measurement to meet the Commissions requirement and operating in a manner which intends to maximize its emission characteristics in a continuous normal application.

The Transmitter was operated in the normal operating mode. The TX frequency was fixed which was for the purpose of the measurements.

Test of channel included the lowest and middle and highest frequency to perform the test, then record on this report.

Those data rates (802.11b: 1 Mbps; 802.11g: 6 Mbps; 802.11n (HT20): MCS0; 802.11n (HT40): MCS0; 802.11ax (HE20): MCS0; 802.11ax (HE40): MCS0;) were used for all test.

Pre-defined engineering program for regulatory testing used to control the EUT for staying in continuous transmitting and receiving mode is programmed.

Frequency and Channel list for 802.11 b/g/n(HT20)/ax(HE20):

Channel	Frequency (MHz)	Channel	Frequency (MHz)	Channel	Frequency (MHz)
1	2412	5	2432	9	2452
2	2417	6	2437	10	2457
3	2422	7	2442	11	2462
4	2427	8	2447		

Frequency and Channel list for 802.11n(HT40)/ax(HE40):

Channel	Frequency (MHz)	Channel	Frequency (MHz)	Channel	Frequency (MHz)
3	2422	6	2437	9	2452
4	2427	7	2442		
5	2432	8	2447		

Test Frequency and Channel for 802.11 b/g/n(HT20)/ax(HE20):

Lowest Frequency		Middle Frequency		Highest Frequency	
Channel	Frequency (MHz)	Channel	Frequency (MHz)	Channel	Frequency (MHz)
1	2412	6	2437	11	2462

Test Frequency and channel for 802.11n(HT40)/ax(HE40):

Lowest Frequency		Middle Frequency		Highest Frequency	
Channel	Frequency (MHz)	Channel	Frequency (MHz)	Channel	Frequency (MHz)
3	2422	6	2437	9	2452

Multi-antenna correlation:

☐	Transmit Signals are Correlated
	Directional gain = 10 log[($10^{G1/20}$ + $10^{G2/20}$ + … + $10^{GN/20}$)2 /N_{ANT}] dBi
☐	All Transmit Signals are Completely Uncorrelated
	Directional gain = 10 log[($10^{G1/10}$ + $10^{G2/10}$ + … + $10^{GN/10}$)/N_{ANT}] dBi

Directional gain = 10 log [($10^{0.11/20}$ + $10^{-1.14/20}$)^2/2] dBi=2.52 dBi

5 FACILITIES AND ACCREDITATIONS

5.1 FACILITIES

All measurement facilities used to collect the measurement data are located at:

EMTEK (Shenzhen) Co., Ltd.
Building 69, Majialong Industry Zone District, Nanshan District, Shenzhen, China
The sites are constructed in conformance with the requirements of ANSI C63.7, ANSI C63.4 and CISPR Publication 22.

5.2 EQUIPMENT

Radiated emissions are measured with one or more of the following types of linearly polarized antennas: tuned dipole, biconical, log periodic, bi-log, and/or ridged waveguide, horn. Spectrum analyzers with preselectors and quasi-peak detectors are used to perform radiated measurements.

Conducted emissions are measured with Line Impedance Stabilization Networks and EMI Test Receivers.

Calibrated wideband preamplifiers, coaxial cables, and coaxial attenuators are also used for making measurements.

All receiving equipment conforms to CISPR Publication 16-1, “Radio Interference Measuring Apparatus and Measurement Methods.”

5.3 LABORATORY ACCREDITATIONS AND LISTINGS

Site Description		
Name of Firm	:	EMTEK (SHENZHEN) CO., LTD.
Site Location	:	Building 69, Majialong Industry Zone, Nanshan District, Shenzhen, Guangdong, China

6 TEST SYSTEM UNCERTAINTY

The following measurement uncertainty levels have been estimated for tests performed on the apparatus:

Test Parameter	Measurement Uncertainty
Radio Frequency	±1x10^-5
Maximum Peak Output Power Test	±1.0dB
Conducted Emissions Test	±2.0dB
Radiated Emission Test	±2.0dB
Power Density	±2.0dB
Occupied Bandwidth Test	±1.0dB
Band Edge Test	±3dB
All emission, radiated	±3dB
Antenna Port Emission	±3dB
Temperature	±0.5℃
Humidity	±3%

Measurement Uncertainty for a level of Confidence of 95%

7 SETUP OF EQUIPMENT UNDER TEST

7.1 RADIO FREQUENCY TEST SETUP 1

The WLAN component's antenna ports(s) of the EUT are connected to the measurement instrument per an appropriate attenuator. The EUT is controlled by PC/software to emit the specified signals for the purpose of measurements.

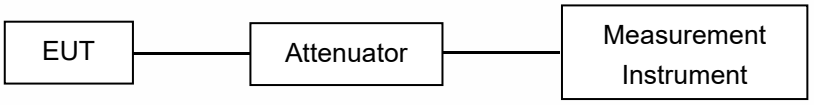

7.2 RADIO FREQUENCY TEST SETUP 2

The test site semi-anechoic chamber has met the requirement of NSA tolerance 4 dB according to the standards: ANSI C63.10. The test distance is 3m.The setup is according to the requirements in Section 13.1.4.1 of ANSI C63.10-2013 and CAN/CSA-CEI/IEC CISPR 22.
The maximal emission value is acquired by adjusting the antenna height, polarisation and turntable azimuth. Normally, the height range of antenna is 1 m to 4 m, the azimuth range of turntable is 0° to 360°, and the receive antenna has two polarizations Vertical (V) and Horizontal (H).

Below 30MHz：
The EUT is placed on a turntable 0.8 meters above the ground in the chamber, 3 meter away from the antenna (loop antenna). The Antenna should be positioned with its plane vertical at the specified distance from the EUT and rotated about its vertical axis for maximum response at each azimuth about the EUT. The center of the loop shall be 1 m above the ground. For certain applications, the loop antenna plane may also need to be positioned horizontally at the specified distance from the EUT.

Above 30MHz：
The EUT is placed on a turntable 0.8 meters above the ground in the chamber, 3 meter away from the antenna. The maximal emission value is acquired by adjusting the antenna height, polarisation and turntable azimuth. Normally, the height range of antenna is 1 m to 4 m, the azimuth range of turntable is 0° to 360°, and the receive antenna has two polarizations Vertical (V) and Horizontal (H).

Above 1GHz:
The EUT is placed on a turntable 1.5 meters above the ground in the chamber, 3 meter away from the antenna. The maximal emission value is acquired by adjusting the antenna height, polarisation and turntable azimuth. Normally, the height range of antenna is 1 m to 4 m, the azimuth range of turntable is 0° to 360°, and the receive antenna has two polarizations Vertical (V) and Horizontal (H).

Measurements shall be taken, using the following steps, at a test site that has been validated using the procedures of ANSI C63.4 or the latest CISPR 16-1-4 for measurements above 1 GHz, so as to simulate a near free-space environment (see RSS-Gen for applicable versions of ANSI and CISPR standards).
(1) Line the ground plane with absorbers between the transmitter and the receive antenna to minimize reflections. The absorbers used should have a minimum-rated attenuation of 20 dB through the measurement frequency range of interest. The absorbers shall be positioned to replicate the layout used when compliance with the applicable acceptability criterion was achieved, as set forth in the aforementioned standards on site validation.
(2) Set the height of the receive antenna to 1.5 m. The receive antenna must be one that was designed and fabricated to operate over the entire frequency range of interest, for example, an appropriate standard gain horn.
(3) The distance between the receive antenna and the radiating source shall be sufficient in order to ensure far-field conditions.
(4) Mount the transmitter at a height of 1.5 m.
(5) Configure the device under test (DUT) to produce the maximum power spectral density as measured while assessing compliance with Section 6.2.2 (i.e. channel frequency, modulation type and data rate). If the DUT is equipped with a detachable antenna and the antenna is intended for remote installation (i.e.

tower-mounted), the DUT may be substituted with a suitable signal generator. The level and frequency settings on the generator shall be set so as to reproduce the maximum power spectral density, measured within a 1 MHz bandwidth, obtained while assessing compliance to Section 6.2.2.
(6) Position the transmitter or the radiating antenna so that elevation pattern measurements can be taken.
(7) Find the 0° reference point in the horizontal plane.
(8) Care should be taken when positioning the receive antenna to avoid cross-polarization. Antennas of known mounting polarization should be assessed with the receive antenna oriented in the same polarity. If the polarization of the transmit antenna is unknown or the transmit antenna can be mounted in either polarization, e.i.r.p. measurements should be performed to find which
mounting polarity provides the highest e.i.r.p. value. Testing shall be carried out with the receive antenna and the DUT mounted in each polarity.
(9) The emission shall be centred on the display of the spectrum analyzer with the following settings:
i. If the power spectral density of the DUT was assessed with a peak detector and the antenna cannot be detached from the DUT, the spectrum analyzer shall be set to a peak detector with a resolution bandwidth and video bandwidth of 1 MHz.
ii. If the power spectral density of the DUT was assessed using a sample detector with power averaging and the antenna cannot be detached from the DUT, the spectrum analyzer shall be set to a sample detector, configured to produce 100 power averages and set with a resolution bandwidth, as well as a video bandwidth of 1 MHz.
iii. If the antenna can be detached from the DUT, a continuous wave (CW) signal equal to that of the power spectral density measurement may be used, the spectrum analyzer shall be set to peak detector with a resolution bandwidth and video bandwidth of 1 MHz.

(10) Rotate the turntable 360° recording the field strength at each step. Throughout the main beam of the antenna, the step size shall be kept to a maximum of 1°.
Once outside the main beam of the antenna, the maximum step size shall be as follows, when compared to the requirements of Section 6.2.2:
i. Between 0° and 8°, maximum step size of 2°;
ii. Between 8° and 40°, maximum step size of 4°;
iii. Between 40° and 45°, maximum step size of 1°;
iv. Between 45° and 90°, maximum step size of 5°.
Once the mask reaches 90°, the mask will be inverted and the step size will follow in the same manner as above.
For the purpose of this procedure, the main beam of the antenna is defined as the 3 dB beamwidth.
(11) Convert the measured field strength values in terms of e.i.r.p. density (dBW/1 MHz) using the following equation:

$$\text{e.i.r.p density(dBW/MHz)}=10\log((E*r)^2/30)$$

E = field strength in V/m
r = measurement distance in metres

(12) Plot the results against the emission mask with reference to the horizontal plane.
(13) Using the plot, the 0° can be rotated to determine the worst-case installation tilt angle.
(14) Testing shall be performed using the highest gain antenna for every antenna type, if applicable.
(15) Antenna type(s), antenna model number(s), and worst-case tilt angle(s) necessary to remain compliant with the elevation mask requirement set forth in Section 6.2.2(3) of RSS-247 shall be clearly indicated in the user manual.
The following figure is an example of a polar elevation mask measured using the Method 1 reference to dBμV/m at 3 m.

(a) Radiated Emission Test Set-Up, Frequency Below 30MHz

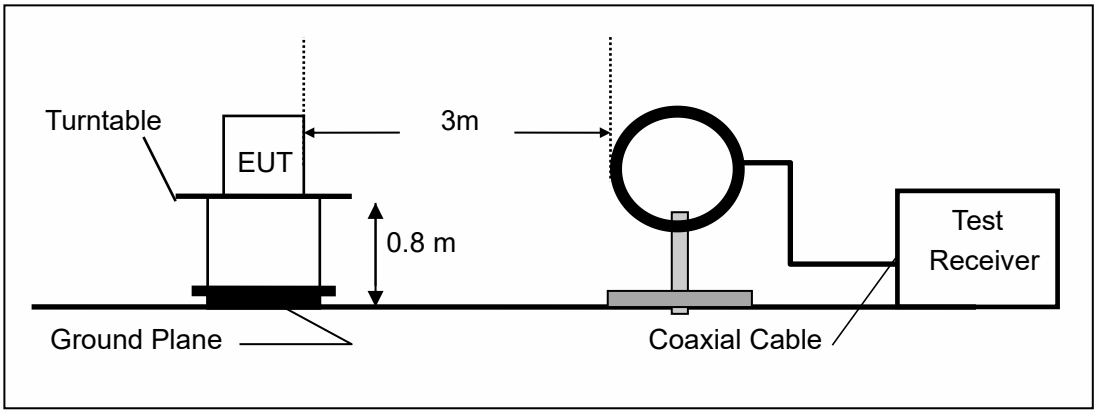

(b) Radiated Emission Test Set-Up, Frequency Below 1000MHz

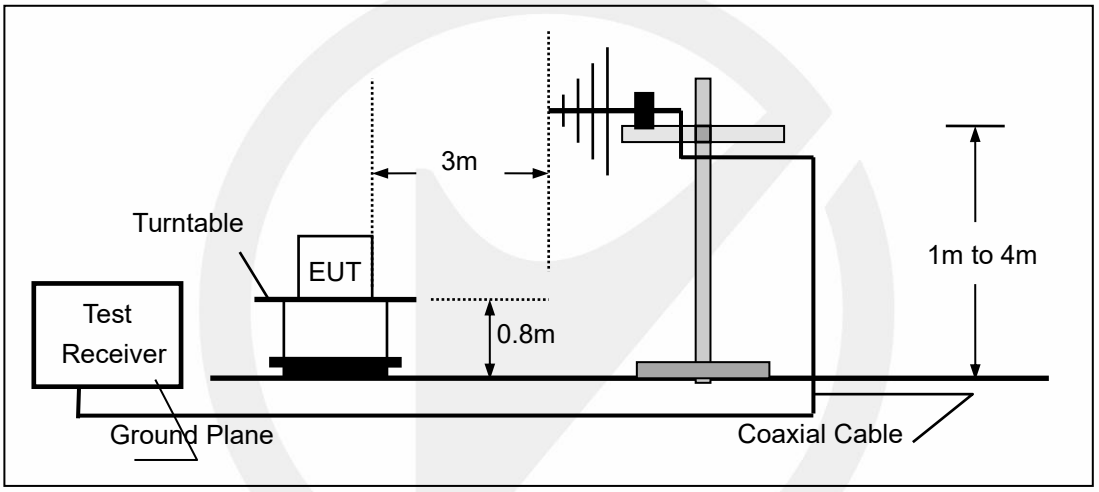

(c) Radiated Emission Test Set-Up, Frequency above 1000MHz

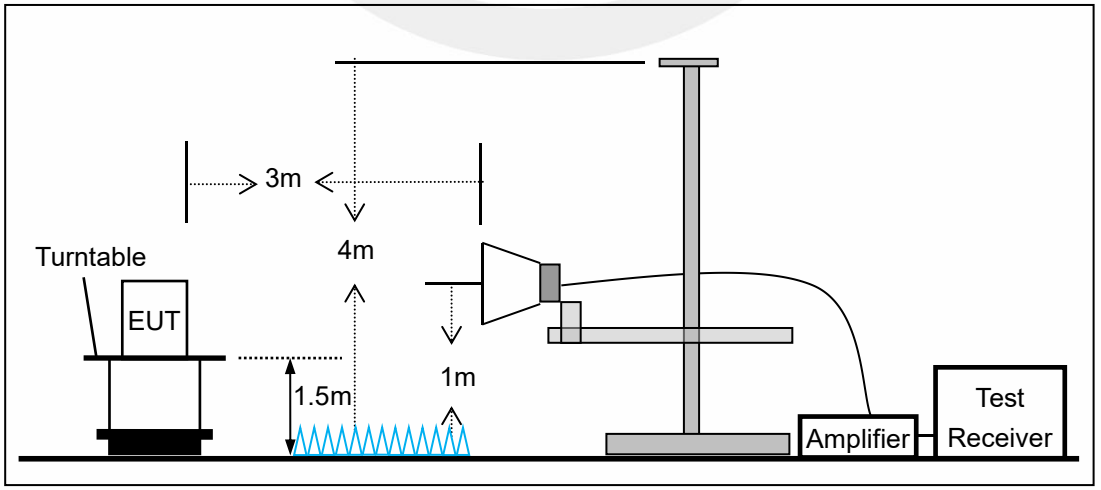

7.3 CONDUCTED EMISSION TEST SETUP

The mains cable of the EUT (maybe per AC/DC Adapter) must be connected to LISN. The LISN shall be placed 0.8 m from the boundary of EUT and bonded to a ground reference plane for LISN mounted on top of the ground reference plane. This distance is between the closest points of the LISN and the EUT. All other units of the EUT and associated equipment shall be at least 0.8m from the LISN.
Ground connections, where required for safety purposes, shall be connected to the reference ground point of the LISN and, where not otherwise provided or specified by the manufacturer, shall be of same length as the mains cable and run parallel to the mains connection at a separation distance of not more than 0.8 m.
According to the requirements in Section 13.1.4.1 of ANSI C63.10-2013 Conducted emissions from the EUT measured in the frequency range between 0.15 MHz and 30 MHz using CISPR Quasi-Peak and average detector mode.

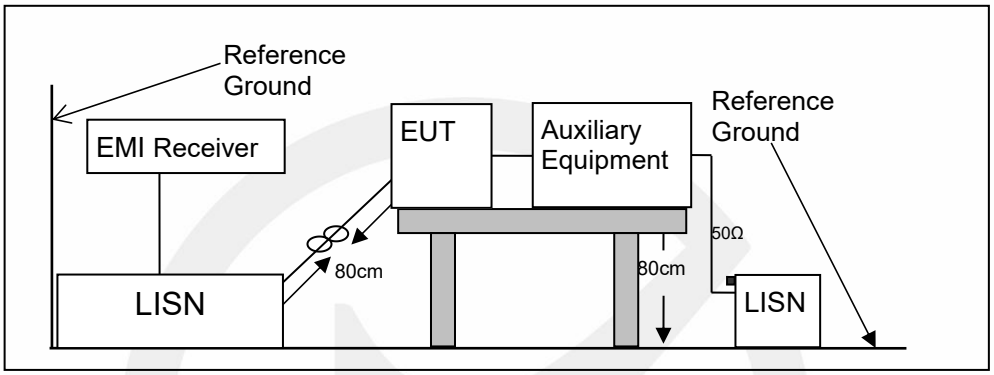

7.4 BLOCK DIAGRAM CONFIGURATION OF TEST SYSTEM

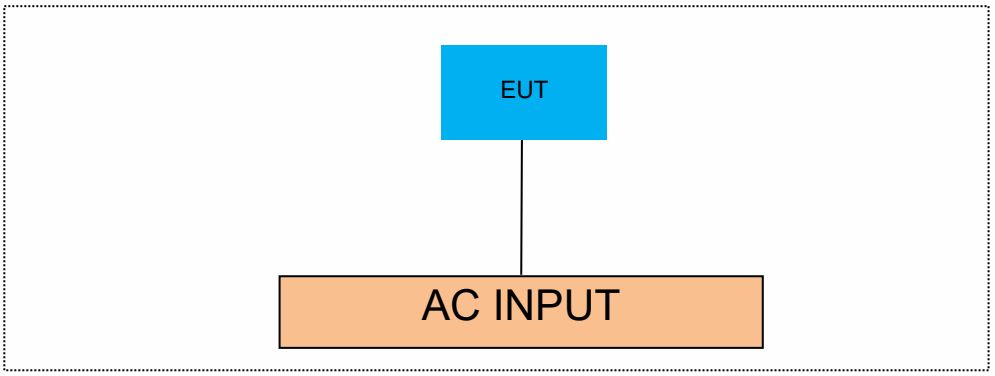

7.5 SUPPORT EQUIPMENT

EUT Cable List and Details			
Cable Description	Length (m)	Shielded/Unshielded	With / Without Ferrite
/	/	/	/

Auxiliary Cable List and Details			
Cable Description	Length (m)	Shielded/Unshielded	With / Without Ferrite
/	/	/	/

Auxiliary Equipment List and Details			
Description	Manufacturer	Model	Serial Number
/	/	/	/

Notes:

1. *All the equipment/cables were placed in the worst-case configuration to maximize the emission during the test.*
2. *Grounding was established in accordance with the manufacturer's requirements and conditions for the intended use.*

8 TEST REQUIREMENTS

8.1 ON TIME AND DUTY CYCLE

8.1.1 Applicable Standard

According to 558074 D01 Section 6

8.1.2 Conformance Limit

N/A; for reporting purposes only.

8.1.3 Test Configuration

Test according to clause 7.1 radio frequency test setup.

8.1.4 Test Procedure

The zero-span mode on a spectrum analyzer or EMI receiver, if the response time and spacing between bins on the sweep are sufficient to permit accurate measurements of the on and off times of the transmitted signal. Set the center frequency of the instrument to the center frequency of the transmission. Set RBW ≥ EBW if possible; otherwise, set RBW to the largest available value. Set VBW ≥ RBW. Set detector = peak or average. The zero-span measurement method shall not be used unless both RBW and VBW are > 50/T, where T is the minimum transmission duration over which the transmitter is on and is transmitting at its maximum power control level for the tested mode of operation), and the number of sweep points across duration T exceeds 100. (For example, if VBW and/or RBW are limited to 3 MHz, then the zero-span method of measuring duty cycle shall not be used if T ≤ 16.7 microseconds.)

8.1.5 Test Results

Temperature:	25˚C
Relative Humidity:	45%
ATM Pressure:	1011 mbar
Test Engineer:	XXH

Note: N/A

Note: Power data reference module report.

8.2 DTS 6DB BANDWIDTH

8.2.1 Applicable Standard

According to FCC Part15.247 (a)(2)
According to RSS-247 5.2(a)
According to 558074 D01 15.247 Meas Guidance v05r02 Section 8.2
According to ANSI C63.10 Section 11.8

8.2.2 Conformance Limit

The minimum -6 dB bandwidth shall be at least 500 kHz.

8.2.3 Test Configuration

Test according to clause 7.1 radio frequency test setup

8.2.4 Test Procedure

The EUT was operating in WIFI mode and controlled its channel. Printed out the test result from the spectrum by hard copy function.
The RF output of EUT was connected to the spectrum analyzer by RF cable and attenuator. The path loss was compensated to the results for each measurement.
Set to the maximum power setting and enable the EUT transmit continuously
Set RBW = 100 kHz.
Set the video bandwidth (VBW) =300 kHz.
Set Span=2 times OBW
Set Detector = Peak.
Set Trace mode = max hold.
Set Sweep = auto couple.
Allow the trace to stabilize.
Measure the maximum width of the emission that is constrained by the frequencies associated with the two outermost amplitude points (upper and lower frequencies) that are attenuated by 6 dB relative to the maximum level measured in the fundamental emission.
Measure and record the results in the test report.

8.2.5 Test Results

Temperature:	25°C
Relative Humidity:	45%
ATM Pressure:	1011 mbar
Test Engineer:	XXH

Note: N/A

Note: Power data reference module report.

8.3 DTS 99% BANDWIDTH

8.3.1 Applicable Standard

According to RSS-Gen 6.7

8.3.2 Test Configuration

Test according to clause 7.1 radio frequency test setup 1

8.3.3 Test Procedure

The EUT was operating in WIFI mode and controlled its channel. Printed out the test result from the spectrum by hard copy function.
The RF output of EUT was connected to the spectrum analyzer by RF cable and attenuator. The path loss was compensated to the results for each measurement.
Set to the maximum power setting and enable the EUT transmit continuously
Set RBW = 1%-5% OBW.
Set the video bandwidth (VBW) ≥3*RBW.
Set Span=approximately 2 to 3 times the 6 dB bandwidth.
Set Detector = Peak.
Set Trace mode = max hold.
Set Sweep = auto couple.
Allow the trace to stabilize.
Use the 99 % power bandwidth function of the instrument
Measure the maximum width of the emission.
If this value varies with different modes of operation (e.g., data rate, modulation format, etc.), repeat this test for each variation.
Measure and record the results in the test report.

8.3.4 Test Results

Temperature:	25˚C
Relative Humidity:	45%
ATM Pressure:	1011 mbar
Test Engineer:	XXH

Note: N/A

Note: Power data reference module report.

8.4 MAXIMUM PEAK CONDUCTED OUTPUT POWER

8.4.1 Applicable Standard

According to FCC Part15.247 (b)(3)
According to RSS-247 5.4(d)
According to RSS-Gen 6.12
According to 558074 D01 15.247 Meas Guidance v05r02 Section 8.3.2.2
According to ANSI C63.10 Section 11.9.2.2.4

8.4.2 Conformance Limit

The maximum conducted output power of the intentional radiator for systems using digital modulation in the 2400 - 2483.5 MHz bands shall not exceed: 1 Watt (30dBm).

8.4.3 Test Configuration

Test according to clause 7.1 radio frequency test setup

8.4.4 Test Procedure

a) Measure the duty cycle D of the transmitter output signal.
b) Set span to at least 1.5 times the OBW.
c) Set RBW = 1% to 5% of the OBW, not to exceed 1 MHz.
d) Set VBW ≥ [3 × RBW].
e) Number of points in sweep ≥ [2 × span / RBW]. (This gives bin-to-bin spacing ≤ RBW / 2, so that narrowband signals are not lost between frequency bins.)
f) Sweep time = auto.
g) Detector = RMS (i.e., power averaging), if available. Otherwise, use the sample detector mode.
h) Do not use sweep triggering. Allow the sweep to “free run.”
i) Trace average at least 100 traces in power averaging (rms) mode; however, the number of traces to be averaged shall be increased above 100 as needed such that the average accurately represents the true average over the ON and OFF periods of the transmitter.
j) Compute power by integrating the spectrum across the OBW of the signal using the instrument’s band power measurement function with band limits set equal to the OBW band edges. If the instrument does not have a band power function, then sum the spectrum levels (in power units) at intervals equal to the RBW extending across the entire OBW of the spectrum.
k) Add [10 log (1 / D)], where D is the duty cycle, to the measured power to compute the average power during the actual transmission times (because the measurement represents an average over both the ON and OFF times of the transmission). For example, add [10 log (1/0.25)] = 6 dB if the duty cycle is 25%.

■ According to FCC Part 15.247(b)(4):
Conducted output power limit specified in paragraph (b) of this section is based on the use of antennas with directional gains that do not exceed 6 dBi. If transmitting antennas of directional gain greater than 6 dBi are used, the conducted output power from the intentional radiator shall be reduced below the stated values in paragraphs (b)(3) of this section, as appropriate, by the amount in dB that the directional gain of the antenna exceeds 6 dBi.
Note: If antenna Gain exceeds 6 dBi, then Output power Limit=30-(Gain- 6)

8.4.5 Test Results

Temperature:	25 ˚C
Relative Humidity:	45%
ATM Pressure:	1011 mbar
Test Engineer:	XXH

Note: N/A

Note: Power data reference module report.

8.5 MAXIMUM POWER SPECTRAL DENSITY

8.5.1 Applicable Standard

According to FCC Part15.247(e)
According to RSS-247 5.2(b)
According to RSS-Gen 6.12
According to 558074 D01 15.247 Meas Guidance v05r02 Section 8.4
According to ANSI C63.10 Section 11.10.5

8.5.2 Conformance Limit

The transmitter power spectral density conducted from the transmitter to the antenna shall not be greater than 8 dBm in any 3 kHz band during any time interval of continuous transmission. This power spectral density shall be determined in accordance with the provisions of section 5.4(d), (i.e. the power spectral density shall be determined using the same method as is used to determine the conducted output power).

8.5.3 Test Configuration

Test according to clause 7.1 radio frequency test setup

8.5.4 Test Procedure

a) Measure the duty cycle (D) of the transmitter output signal
b) Set instrument center frequency to DTS channel center frequency.
c) Set span to at least 1.5 times the OBW.
d) Set RBW to: 3 kHz ≤ RBW ≤ 100 kHz.
e) Set VBW ≥ [3 × RBW].
f) Detector = power averaging (rms) or sample detector (when rms not available).
g) Ensure that the number of measurement points in the sweep ≥ [2 × span / RBW].
h) Sweep time = auto couple.
i) Do not use sweep triggering; allow sweep to “free run.”
j) Employ trace averaging (rms) mode over a minimum of 100 traces.
k) Use the peak marker function to determine the maximum amplitude level.
l) Add [10 log (1 / D)], where D is the duty cycle measured in step a), to the measured PSD to compute the average PSD during the actual transmission time.
m) If measured value exceeds requirement specified by regulatory agency, then reduce RBW (but no less than 3 kHz) and repeat (note that this may require zooming in on the emission of interest and reducing the span to meet the minimum measurement point requirement as the RBW is reduced).

8.5.5 Test Results

Temperature:	25 ˚C
Relative Humidity:	45%
ATM Pressure:	1011 mbar
Test Engineer:	XXH

Note: N/A

Note: Power data reference module report.

8.6 UNWANTED EMISSIONS IN NON-RESTRICTED FREQUENCY BANDS

8.6.1 Applicable Standard

According to FCC Part15.247(d)
According to RSS-247 5.5
According to 558074 D01 15.247 Meas Guidance v05r02 Section 8.5
According to ANSI C63.10 Section 11.11

8.6.2 Conformance Limit

According to FCC Part 15.247(d):
In any 100 kHz bandwidth outside the frequency band in which the spread spectrum or digitally modulated device is operating, the RF power that is produced shall be at least 20 dB below that in the 100 kHz bandwidth within the band that contains the highest level of the desired power, based on either an RF conducted or a radiated measurement, provided that the transmitter demonstrates compliance with the peak conducted power limits. If the transmitter complies with the conducted power limits based on the use of root-mean-square averaging over a time interval, as permitted undersection 5.4(d), the attenuation required shall be 30 dB instead of 20 dB. Attenuation below the general field strength limits specified in RSS-Gen is not required.

8.6.3 Test Configuration

Test according to clause 7.1 radio frequency test setup

8.6.4 Test Procedure

The transmitter output (antenna port) was connected to the spectrum analyzer

- **Reference level measurement**

Establish a reference level by using the following procedure:
Set instrument center frequency to DTS channel center frequency.
Set the span to ≥ 1.5 times the DTS bandwidth.
Set the RBW = 100 kHz.
Set the VBW ≥ 3 x RBW.
Set Detector = peak.
Set Sweep time = auto couple.
Set Trace mode = max hold.
Allow trace to fully stabilize.
Use the peak marker function to determine the maximum PSD level.
Note that the channel found to contain the maximum PSD level can be used to establish the reference level.

- **Band-edge measurement**

Use the following spectrum analyzer settings:
Span = wide enough to capture the peak level of the emission operating on the channel closest to the band-edge, as well as any modulation products which fall outside of the authorized band of operation
Set RBW ≥ 1% of the span=100kHz Set VBW ≥ 3 x RBW
Set Sweep = auto Set Detector function = peak Set Trace = max hold
Allow the trace to stabilize. Set the marker on the emission at the bandedge, or on the highest modulation product outside of the band, if this level is greater than that at the bandedge. Enable the marker-delta function, then use the marker-to-peak function to move the marker to the peak of the in-band emission. The marker-delta value now displayed must comply with the limit specified in this Section.

- **Emission level measurement**

Set the center frequency and span to encompass frequency range to be measured.
Set the RBW = 100 kHz.
Set the VBW =300 kHz.
Set Detector = peak
Sweep time = auto couple.
Trace mode = max hold.
Allow trace to fully stabilize.
Use the peak marker function to determine the maximum amplitude level.
Ensure that the amplitude of all unwanted emissions outside of the authorized frequency band (excluding

restricted frequency bands) are attenuated by at least the minimum requirements . Report the three highest emissions relative to the limit.

8.6.5 Test Results

Temperature:	25 ˚C
Relative Humidity:	45%
ATM Pressure:	1011 mbar
Test Engineer:	XXH

Note: N/A

Note: Power data reference module report.

8.7 RADIATED SPURIOUS EMISSION

8.7.1 Applicable Standard

According to FCC Part 15.247(d), 15.205, 15.209
According to RSS-Gen and RSS-247
According to 558074 D01 15.247 Meas Guidance v05r02 Section 8.6
According to ANSI C63.10 Section 11.12

8.7.2 Conformance Limit

According to FCC Part 15.247(d): radiated emissions which fall in the restricted bands, as defined in §15.205(a), must also comply with the radiated emission limits specified in §15.209(a) (see §15.205(c)).
According to FCC Part15.205, Restricted bands

MHz	MHz	MHz	GHz
0.090-0.110	16.42-16.423	399.9-410	4.5-5.15
0.495-0.505	16.69475-16.69525	608-614	5.35-5.46
2.1735-2.1905	16.80425-16.80475	960-1240	7.25-7.75
4.125-4.128	25.5-25.67	1300-1427	8.025-8.5
4.17725-4.17775	37.5-38.25	1435-1626.5	9.0-9.2
4.20725-4.20775	73-74.6	1645.5-1646.5	9.3-9.5
6.215-6.218	74.8-75.2	1660-1710	10.6-12.7
6.26775-6.26825	123-138	2200-2300	14.47-14.5
8.291-8.294	149.9-150.05	2310-2390	15.35-16.2
8.362-8.366	156.52475-156.52525	2483.5-2500	17.7-21.4
8.37625-8.38675	156.7-156.9	2690-2900	22.01-23.12
8.41425-8.41475	162.0125-167.17	3260-3267	23.6-24.0
12.29-12.293	167.72-173.2	3332-3339	31.2-31.8
12.51975-12.52025	240-285	3345.8-3358	36.43-36.5
12.57675-12.57725	322-335.4	3600-4400	Above 38.6
13.36-13.41			

According to FCC Part15.205 the level of any transmitter spurious emission in Restricted bands shall not exceed the level of the emission specified in the following table

Restricted Frequency(MHz)	Field Strength (μV/m)	Field Strength (dBμV/m)	Measurement Distance
0.009-0.490	2400/F(KHz)	20 log (uV/m)	300
0.490-1.705	24000/F(KHz)	20 log (uV/m)	30
1.705-30	30	29.5	30
30-88	100	40	3
88-216	150	43.5	3
216-960	200	46	3
Above 960	500	54	3

8.7.3 Test Configuration

Test according to clause 7.2 radio frequency test setup

8.7.4 Test Procedure

This test is required for any spurious emission that falls in a Restricted Band, as defined in Section 15.205. It must be performed with the highest gain of each type of antenna proposed for use with the EUT. Use the following spectrum analyzer settings:
For Above 1GHz:
The EUT was placed on a turn table which is 1.5m above ground plane.
Maximum procedure was performed on the highest emissions to ensure EUT compliance.
Span = wide enough to fully capture the emission being measured
RBW = 1 MHz
VBW ≥ RBW
Sweep = auto

Detector function = peak
Trace = max hold
For average measurements the resolution bandwidth of spectrum analyzer is 1 MHz with the video bandwidth is ≥ 1/T with peak detector.
For Below 1GHz:
The EUT was placed on a turn table which is 0.8m above ground plane.
Maximum procedure was performed on the highest emissions to ensure EUT compliance.
Span = wide enough to fully capture the emission being measured
RBW = 100 kHz for
VBW ≥ RBW
Sweep = auto
Detector function = peak
Trace = max hold
For Below 30MHz:
The EUT was placed on a turn table which is 0.8m above ground plane.
Maximum procedure was performed on the highest emissions to ensure EUT compliance.
Span = wide enough to fully capture the emission being measured
RBW = 9kHz
VBW ≥ RBW
Sweep = auto
Detector function = peak
Trace = max hold
For Below 150KHz:
The EUT was placed on a turn table which is 0.8m above ground plane.
Maximum procedure was performed on the highest emissions to ensure EUT compliance.
Span = wide enough to fully capture the emission being measured
RBW = 200Hz
VBW ≥ RBW
Sweep = auto
Detector function = peak
Trace = max hold
Follow the guidelines in ANSI C63.10 with respect to maximizing the emission by rotating the EUT, measuring the emission while the EUT is situated in three orthogonal planes (if appropriate), adjusting the measurement antenna height and polarization, etc. A pre-amp and a high pass filter are required for this test, in order to provide the measuring system with sufficient sensitivity. Allow the trace to stabilize. The peak reading of the emission, after being corrected by the antenna factor, cable loss, pre-amp gain, etc., is the peak field strength, which must comply with the limit. Submit this data.

8.7.5 Test Results

Temperature:	26° C
Relative Humidity:	54%
ATM Pressure:	1011 mbar
Test Engineer:	XXH

■ Spurious Emission below 30MHz(9KHz to 30MHz)

For Spurious Emission below 30MHz (9KHz to 30MHz), was pre-scanned and the result which was 20dB lower than the limit line per 15.31(o) was not reported.

■ Spurious Emission Above 1GHz(1GHz to 25GHz)

All the antenna(Antenna 1&2) and modes(802.11b/g/n/ax) have been tested and the worst(Antenna 1&2, 802.11b) result recorded was report as below:

Test mode:	802.11b	Frequency:	Channel 1: 2412MHz

Freq. (MHz)	Ant.Pol.	Reading Level (dBuV/m)	Correct Factor (dB/m)	Corrected Reading (dBuV/m)	Limit 3m (dBuV/m)	Margin (dB)	Remark
10181.25	V	58.72	2.82	61.54	74.00	15.28	Peak
13164.375	V	63.03	9.59	72.62	74.00	10.97	Peak
17617.5	V	66.85	11.84	78.69	74.00	7.15	Peak
10181.25	V	44.97	2.82	47.79	54.00	9.03	Avg
13164.375	V	48.01	9.59	57.6	54.00	5.99	Avg
17617.5	V	47.15	11.84	58.99	54.00	6.85	Avg
10083.75	H	58.49	2.75	61.24	74.00	15.51	Peak
13198.125	H	62.93	10.43	73.36	74.00	11.07	Peak
16983.75	H	65.1	11.2	76.3	74.00	8.9	Peak
10083.75	H	44.91	2.75	47.66	54.00	9.09	Avg
13198.125	H	48.74	10.43	59.17	54.00	5.26	Avg
16983.75	H	46.42	11.2	57.62	54.00	7.58	Avg

Note:
(1) PeaK RBW = 1 MHz, VBW ≥ 3 × RBW, Detector = Peak;
(2) Avg RBW = 1 MHz, VBW = $1/T_{on}$, Detector = Peak, where: T_{on} is transmit duration;
(3) Corrected Reading = Reading Level + Correct Factor;
(4) Correct Factor = Ant_F + Cab_L - Preamp;
(5) Margin = Limit - Corrected Reading;

Test mode:	802.11b	Frequency:	Channel 6: 2437MHz

Freq. (MHz)	Ant.Pol.	Reading Level (dBuV/m)	Correct Factor (dB/m)	Corrected Reading (dBuV/m)	Limit 3m (dBuV/m)	Margin (dB)	Remark
9913.125	V	58.17	1.84	60.01	74.00	15.83	Peak
13181.25	V	62.97	10.01	72.98	74.00	11.03	Peak
17002.5	V	65.85	11.42	77.27	74.00	8.15	Peak
9913.125	V	44.2	1.84	46.04	54.00	9.8	Avg
13181.25	V	48.25	10.01	58.26	54.00	5.75	Avg
17002.5	V	47.03	11.42	58.45	54.00	6.97	Avg
10554.375	H	58.63	2.49	61.12	74.00	15.37	Peak
13143.75	H	63.89	9.08	72.97	74.00	10.11	Peak
17621.25	H	67.12	11.77	78.89	74.00	6.88	Peak
10554.375	H	45.13	2.49	47.62	54.00	8.87	Avg
13143.75	H	47.31	9.08	56.39	54.00	6.69	Avg
17621.25	H	47.14	11.77	58.91	54.00	6.86	Avg

Note:
(1) PeaK RBW = 1 MHz, VBW ≥ 3 × RBW, Detector = Peak;
(2) Avg RBW = 1 MHz, VBW = $1/T_{on}$, Detector = Peak, where: T_{on} is transmit duration;
(3) Corrected Reading = Reading Level + Correct Factor;
(4) Correct Factor = Ant_F + Cab_L - Preamp;
(5) Margin = Limit - Corrected Reading;

Test mode:	802.11b	Frequency:	Channel 11: 2462MHz

Freq. (MHz)	Ant.Pol.	Reading Level (dBuV/m)	Correct Factor (dB/m)	Corrected Reading (dBuV/m)	Limit 3m (dBuV/m)	Margin (dB)	Remark
10241.25	V	58.59	2.1	60.69	74.00	15.41	Peak
13171.875	V	62.48	9.78	72.26	74.00	11.52	Peak
16940.625	V	65.28	10.4	75.68	74.00	8.72	Peak
10241.25	V	44.26	2.1	46.36	54.00	9.74	Avg
13171.875	V	48.24	9.78	58.02	54.00	5.76	Avg
16940.625	V	46.01	10.4	56.41	54.00	7.99	Avg
9376.875	H	57.56	0.24	57.8	74.00	16.44	Peak
13194.375	H	62.92	10.34	73.26	74.00	11.08	Peak
17448.75	H	65.37	10.26	75.63	74.00	8.63	Peak
9376.875	H	42.91	0.24	43.15	54.00	11.09	Avg
13194.375	H	48.97	10.34	59.31	54.00	5.03	Avg
17448.75	H	45.65	10.26	55.91	54.00	8.35	Avg

Note:
(1) PeaK RBW = 1 MHz, VBW ≥ 3 × RBW, Detector = Peak;
(2) Avg RBW = 1 MHz, VBW = $1/T_{on}$, Detector = Peak, where: T_{on} is transmit duration;
(3) Corrected Reading = Reading Level + Correct Factor;
(4) Correct Factor = Ant_F + Cab_L - Preamp;
(5) Margin = Limit - Corrected Reading;

■ Spurious Emission in Restricted Band 2310-2390MHz and 2483.5-2500MHz

All the antenna(Antenna 1&2) and modes(802.11b/g/n/ax) have been tested and the worst(Antenna 1&2, 802.11ax(HE20)) result recorded was report as below:

Test mode: 802.11ax(HE20) Frequency: Channel 1: 2412MHz

Freq. (MHz)	Ant.Pol.	Reading Level (dBuV/m)	Correct Factor (dB/m)	Corrected Reading (dBuV/m)	Limit 3m (dBuV/m)	Margin (dB)	Remark
2378.58	V	13.96	30.29	44.25	74.00	29.75	Peak
2378.58	V	6.52	30.29	36.81	54.00	17.19	Avg
2388.13	H	14.18	30.28	44.46	74.00	29.54	Peak
2388.13	H	6.36	30.28	36.64	54.00	17.36	Avg

Note:
(1) PeaK RBW = 1 MHz, VBW ≥ 3 × RBW, Detector = Peak;
(2) Avg RBW = 1 MHz, VBW ≥ 3 × RBW, Detector = RMS;
(3) Corrected Reading = Reading Level + Correct Factor;
(4) Correct Factor = Ant_F + Cab_L - Preamp;
(5) Margin = Limit - Corrected Reading;

Test mode: 802.11ax(HE20) Frequency: Channel 11: 2462MHz

Freq. (MHz)	Ant.Pol.	Reading Level (dBuV/m)	Correct Factor (dB/m)	Corrected Reading (dBuV/m)	Limit 3m (dBuV/m)	Margin (dB)	Remark
2485.93	V	14.57	30.12	44.69	74.00	29.31	Peak
2485.93	V	6.34	30.12	36.46	54.00	17.54	Avg
2484.99	H	16.35	30.12	46.47	74.00	27.53	Peak
2484.99	H	6.51	30.12	36.63	54.00	17.37	Avg

Note:
(1) PeaK RBW = 1 MHz, VBW ≥ 3 × RBW, Detector = Peak;
(2) Avg RBW = 1 MHz, VBW = $1/T_{on}$, Detector = Peak, where: T_{on} is transmit duration;
(3) Corrected Reading = Reading Level + Correct Factor;
(4) Correct Factor = Ant_F + Cab_L - Preamp;
(5) Margin = Limit - Corrected Reading;

Test Model	Spurious Emission in Restricted Band 2310-2390MHz 802.11ax(HE20) Channel 1: 2412MHz Polarity: H

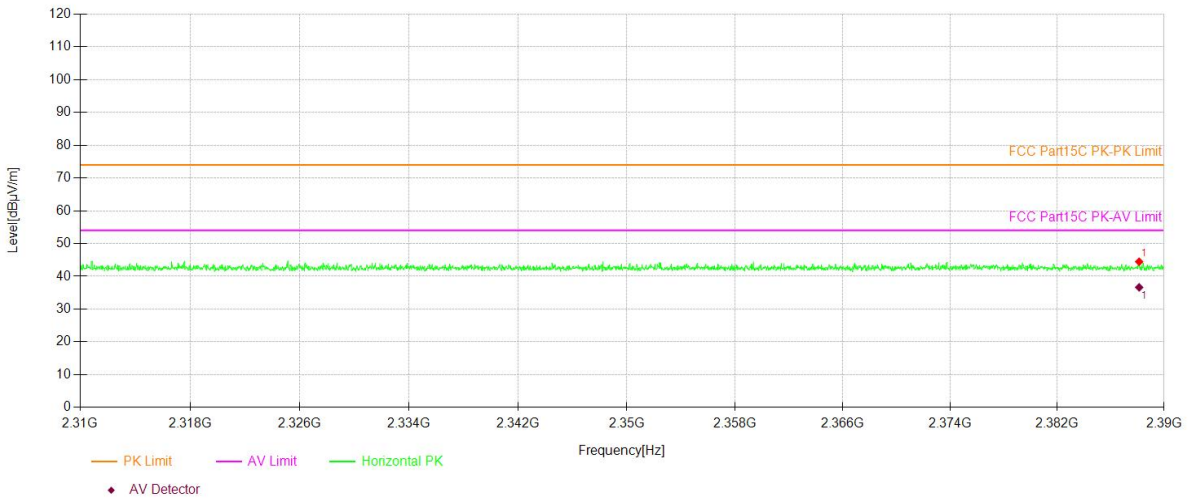

Test Model	Spurious Emission in Restricted Band 2310-2390MHz 802.11ax(HE20) Channel 1: 2412MHz Polarity: V

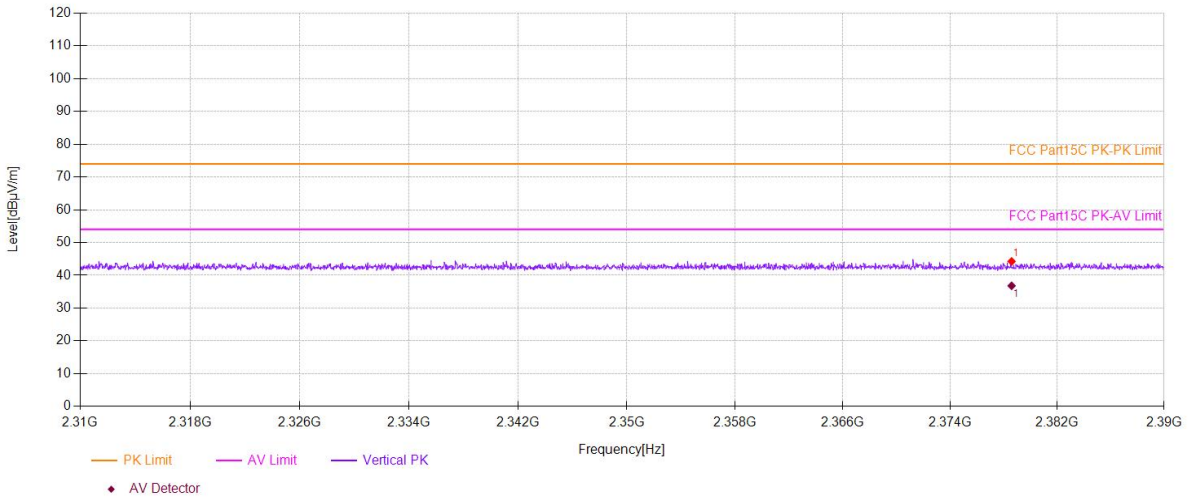

Test Model	Spurious Emission in Restricted Band 2483.5-2500MHz 802.11ax(HE20) Channel 11: 2462MHz Polarity: H

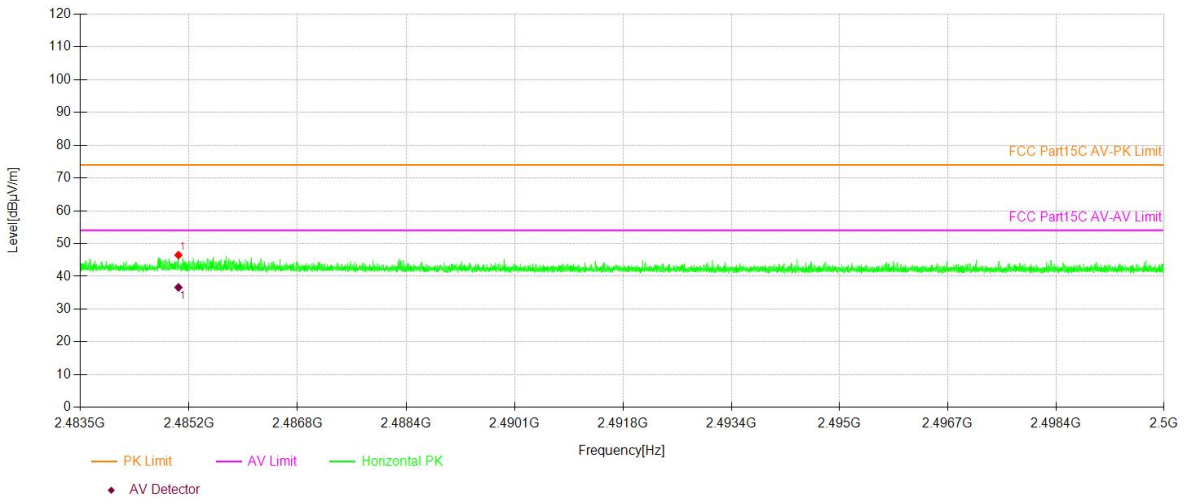

Test Model	Spurious Emission in Restricted Band2483.5-2500MHz 802.11ax(HE20) Channel 11: 2462MHz Polarity: V

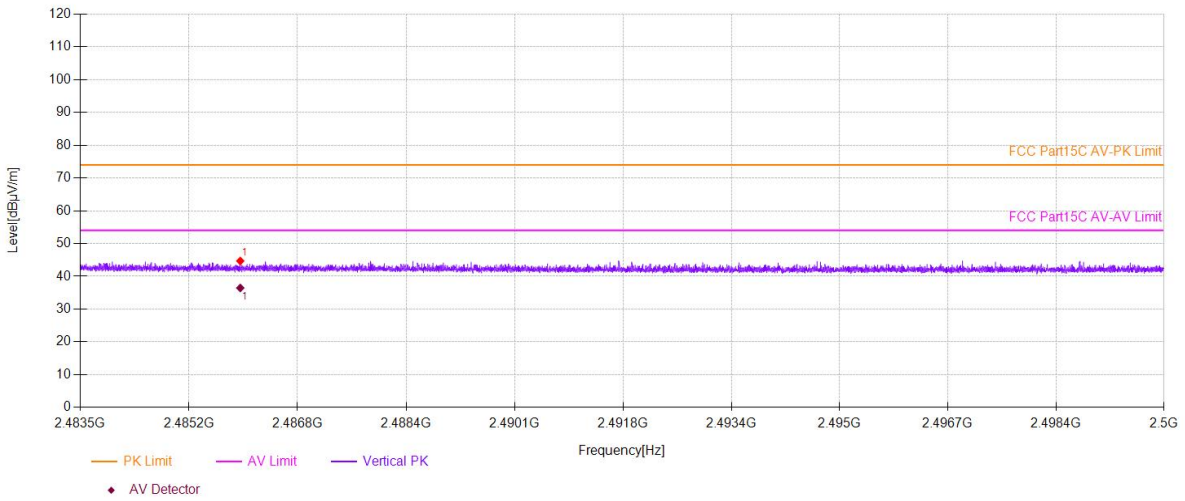

■ Spurious Emission below 1GHz (30MHz to 1GHz)

All the antenna(Antenna 1&2) and modes(802.11b/g/n/ax) have been tested and the worst(Antenna 1&2, 802.11b) result recorded was report as below:

2412

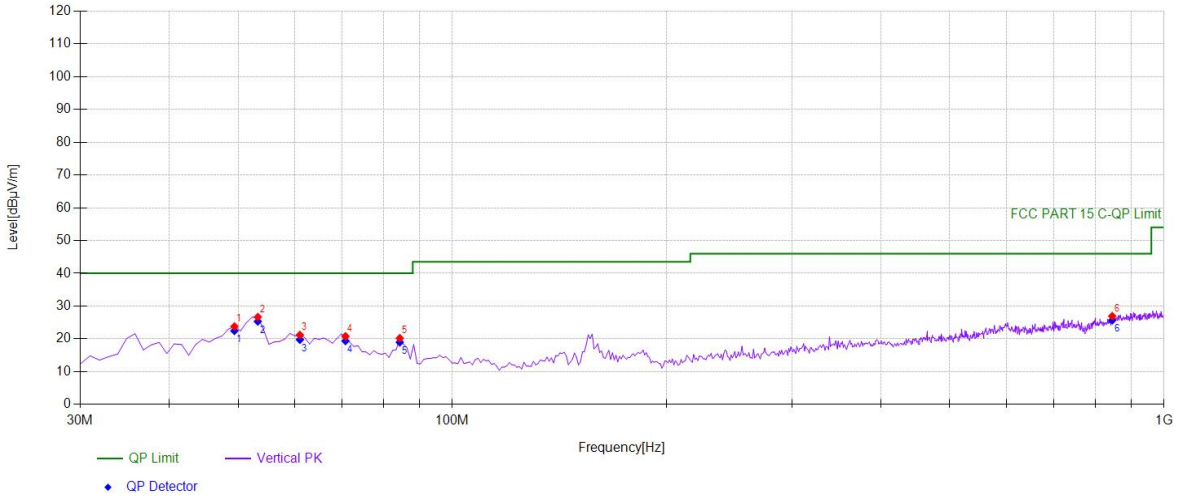

Suspected Data List								
NO.	Freq. [MHz]	Reading [dBμV]	Factor [dB/m]	Level [dBμV/m]	Detector	Limit [dBμV/m]	Margin [dB]	Polarity
1	49.4194	34.55	-10.75	23.80	PK	40.00	16.20	Vertical
2	53.3033	37.77	-11.11	26.66	PK	40.00	13.34	Vertical
3	61.0711	33.36	-12.17	21.19	PK	40.00	18.81	Vertical
4	70.7808	34.38	-13.58	20.80	PK	40.00	19.20	Vertical
5	84.3744	34.45	-14.24	20.21	PK	40.00	19.79	Vertical
6	845.6156	25.67	1.27	26.94	PK	46.00	19.06	Vertical

Final Data List					
NO.	Freq. [MHz]	Factor [dB/m]	QP Value [dBμV/m]	QP Limit [dBμV/m]	QP Margin [dB]
1	49.4194	-10.75	22.47	40.00	17.53
2	53.3033	-11.11	25.33	40.00	14.67
3	61.0711	-12.17	19.77	40.00	20.23
4	70.7808	-13.58	19.38	40.00	20.62
5	84.3744	-14.24	18.97	40.00	21.03
6	845.6156	1.27	25.70	46.00	20.30

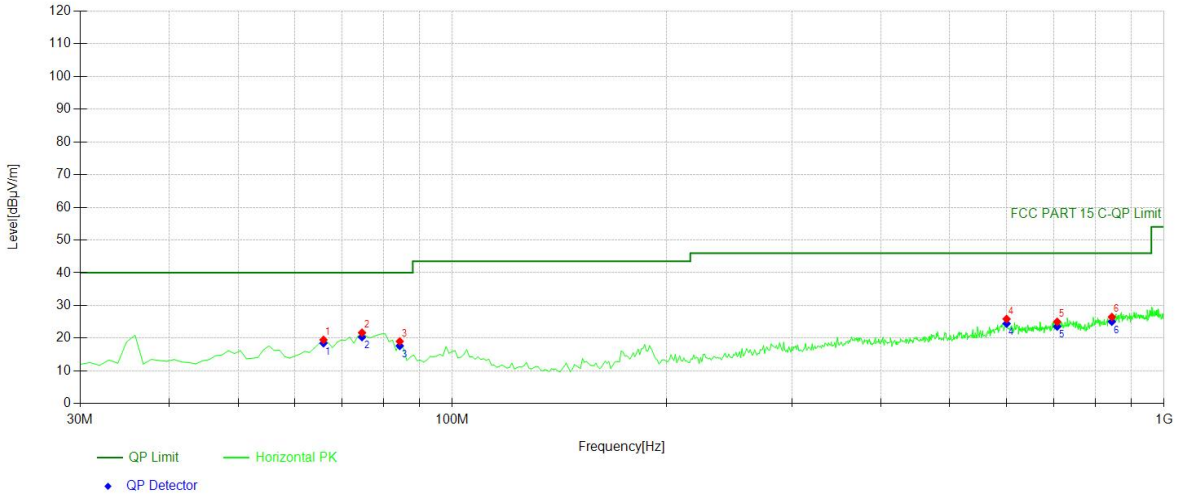

Suspected Data List								
NO.	Freq. [MHz]	Reading [dBμV]	Factor [dB/m]	Level [dBμV/m]	Detector	Limit [dBμV/m]	Margin [dB]	Polarity
1	65.9259	32.38	-12.88	19.50	PK	40.00	20.50	Horizontal
2	74.6647	35.83	-14.15	21.68	PK	40.00	18.32	Horizontal
3	84.3744	33.26	-14.24	19.02	PK	40.00	20.98	Horizontal
4	600.9309	26.21	-0.33	25.88	PK	46.00	20.12	Horizontal
5	707.7377	25.22	-0.21	25.01	PK	46.00	20.99	Horizontal
6	844.6446	25.26	1.22	26.48	PK	46.00	19.52	Horizontal

Final Data List					
NO.	Freq. [MHz]	Factor [dB/m]	QP Value [dBμV/m]	QP Limit [dBμV/m]	QP Margin [dB]
1	65.9259	-12.88	18.48	40.00	21.52
2	74.6647	-14.15	20.34	40.00	19.66
3	84.3744	-14.24	17.68	40.00	22.32
4	600.9309	-0.33	24.46	46.00	21.54
5	707.7377	-0.21	23.59	46.00	22.41
6	844.6446	1.22	25.06	46.00	20.94

2437

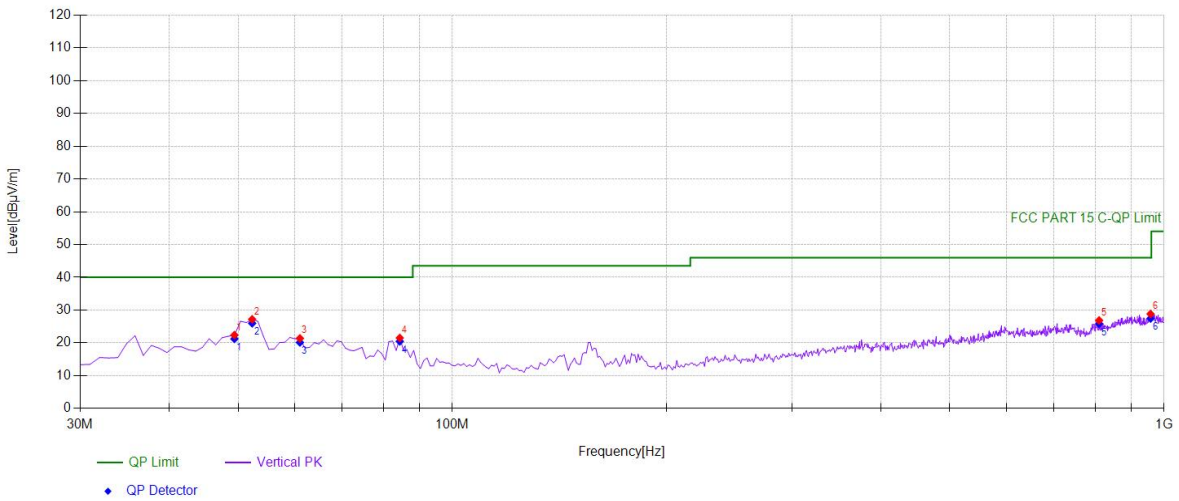

Suspected Data List								
NO.	Freq. [MHz]	Reading [dBµV]	Factor [dB/m]	Level [dBµV/m]	Detector	Limit [dBµV/m]	Margin [dB]	Polarity
1	49.4194	33.13	-10.75	22.38	PK	40.00	17.62	Vertical
2	52.3323	38.17	-10.97	27.20	PK	40.00	12.80	Vertical
3	61.0711	33.55	-12.17	21.38	PK	40.00	18.62	Vertical
4	84.3744	35.76	-14.24	21.52	PK	40.00	18.48	Vertical
5	810.6607	26.10	0.76	26.86	PK	46.00	19.14	Vertical
6	957.2773	25.59	3.24	28.83	PK	46.00	17.17	Vertical

Final Data List					
NO.	Freq. [MHz]	Factor [dB/m]	QP Value [dBµV/m]	QP Limit [dBµV/m]	QP Margin [dB]
1	49.4194	-10.75	21.23	40.00	18.77
2	52.3323	-10.97	25.97	40.00	14.03
3	61.0711	-12.17	20.15	40.00	19.85
4	84.3744	-14.24	20.47	40.00	19.53
5	810.6607	0.76	25.81	46.00	20.19
6	957.2773	3.24	27.45	46.00	18.55

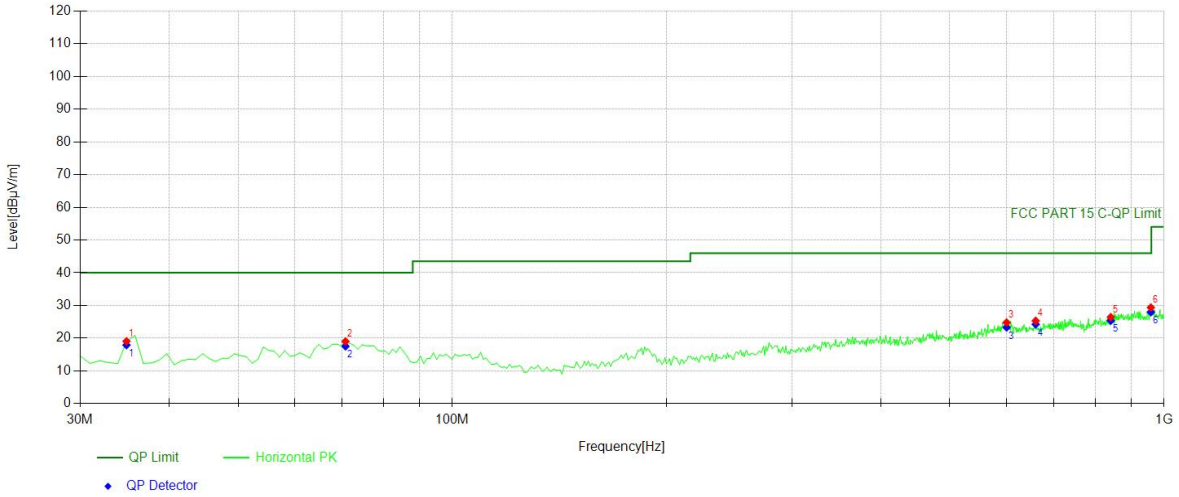

Suspected Data List								
NO.	Freq. [MHz]	Reading [dBμV]	Factor [dB/m]	Level [dBμV/m]	Detector	Limit [dBμV/m]	Margin [dB]	Polarity
1	34.8549	32.12	-13.04	19.08	PK	40.00	20.92	Horizontal
2	70.7808	32.60	-13.58	19.02	PK	40.00	20.98	Horizontal
3	600.9309	25.13	-0.33	24.80	PK	46.00	21.20	Horizontal
4	660.1602	26.38	-1.06	25.32	PK	46.00	20.68	Horizontal
5	841.7317	25.37	1.07	26.44	PK	46.00	19.56	Horizontal
6	958.2482	26.06	3.32	29.38	PK	46.00	16.62	Horizontal

Final Data List					
NO.	Freq. [MHz]	Factor [dB/m]	QP Value [dBμV/m]	QP Limit [dBμV/m]	QP Margin [dB]
1	34.8549	-13.04	17.91	40.00	22.09
2	70.7808	-13.58	17.53	40.00	22.47
3	600.9309	-0.33	23.31	46.00	22.69
4	660.1602	-1.06	24.25	46.00	21.75
5	841.7317	1.07	25.37	46.00	20.63
6	958.2482	3.32	27.99	46.00	18.01

2462

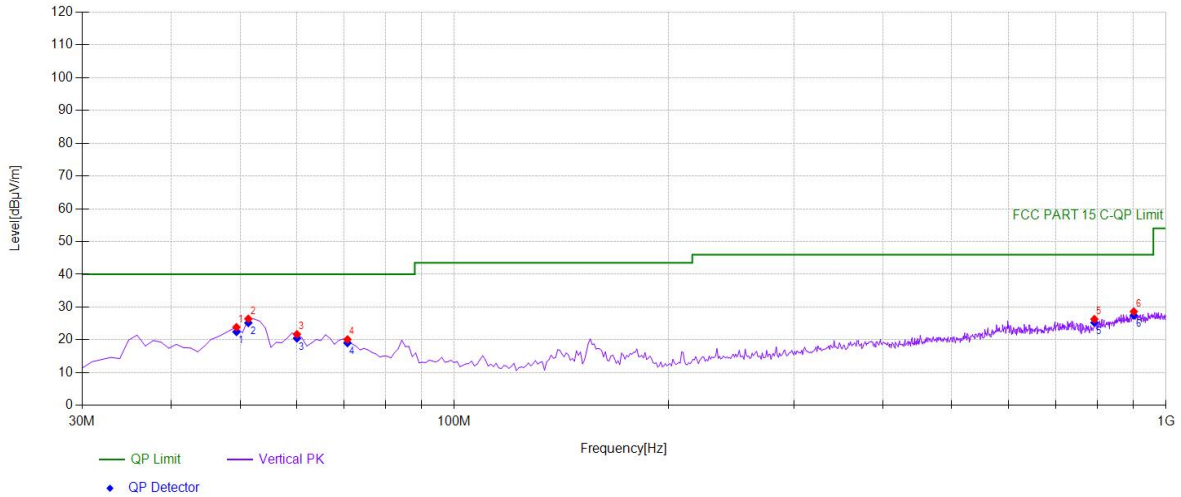

Suspected Data List								
NO.	Freq. [MHz]	Reading [dBµV]	Factor [dB/m]	Level [dBµV/m]	Detector	Limit [dBµV/m]	Margin [dB]	Polarity
1	49.4194	34.63	-10.75	23.88	PK	40.00	16.12	Vertical
2	51.3614	37.29	-10.85	26.44	PK	40.00	13.56	Vertical
3	60.1001	33.75	-12.03	21.72	PK	40.00	18.28	Vertical
4	70.7808	33.72	-13.58	20.14	PK	40.00	19.86	Vertical
5	793.183	26.38	-0.05	26.33	PK	46.00	19.67	Vertical
6	900.961	26.07	2.56	28.63	PK	46.00	17.37	Vertical

Final Data List					
NO.	Freq. [MHz]	Factor [dB/m]	QP Value [dBµV/m]	QP Limit [dBµV/m]	QP Margin [dB]
1	49.4194	-10.75	22.45	40.00	17.55
2	51.3614	-10.85	25.19	40.00	14.81
3	60.1001	-12.03	20.47	40.00	19.53
4	70.7808	-13.58	19.07	40.00	20.93
5	793.1832	-0.05	25.26	46.00	20.74
6	900.961	2.56	27.48	46.00	18.52

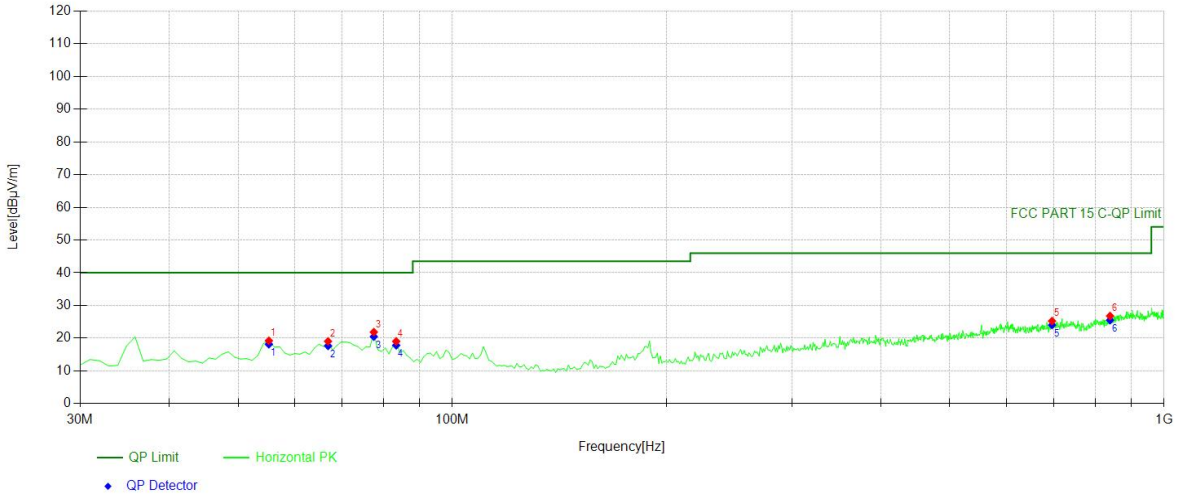

Suspected Data List								
NO.	Freq. [MHz]	Reading [dBμV]	Factor [dB/m]	Level [dBμV/m]	Detector	Limit [dBμV/m]	Margin [dB]	Polarity
1	55.2452	30.60	-11.37	19.23	PK	40.00	20.77	Horizontal
2	66.8969	32.06	-13.01	19.05	PK	40.00	20.95	Horizontal
3	77.5776	36.44	-14.56	21.88	PK	40.00	18.12	Horizontal
4	83.4034	33.43	-14.39	19.04	PK	40.00	20.96	Horizontal
5	696.086	25.64	-0.40	25.24	PK	46.00	20.76	Horizontal
6	839.789	25.82	0.98	26.80	PK	46.00	19.20	Horizontal

Final Data List					
NO.	Freq. [MHz]	Factor [dB/m]	QP Value [dBμV/m]	QP Limit [dBμV/m]	QP Margin [dB]
1	55.2452	-11.37	18.16	40.00	21.84
2	66.8969	-13.01	17.66	40.00	22.34
3	77.5776	-14.56	20.49	40.00	19.51
4	83.4034	-14.39	17.83	40.00	22.17
5	696.0861	-0.40	24.03	46.00	21.97
6	839.7898	0.98	25.51	46.00	20.49

8.8 CONDUCTED EMISSION TEST

8.8.1 Applicable Standard

According to FCC Part 15.207(a)
According to RSS-Gen 8.8

8.8.2 Conformance Limit

Conducted Emission Limit

Frequency(MHz)	Quasi-peak	Average
0.15-0.5	66-56	56-46
0.5-5.0	56	46
5.0-30.0	60	50

Note: 1. The lower limit shall apply at the transition frequencies
2. The limit decreases in line with the logarithm of the frequency in the range of 0.15 to 0.50MHz.

8.8.3 Test Configuration

Test according to clause 7.3 conducted emission test setup

8.8.4 Test Procedure

The EUT was placed on a table which is 0.8m above ground plane.
Maximum procedure was performed on the highest emissions to ensure EUT compliance.
Repeat above procedures until all frequency measured were complete.

8.8.5 Test Results

Pass

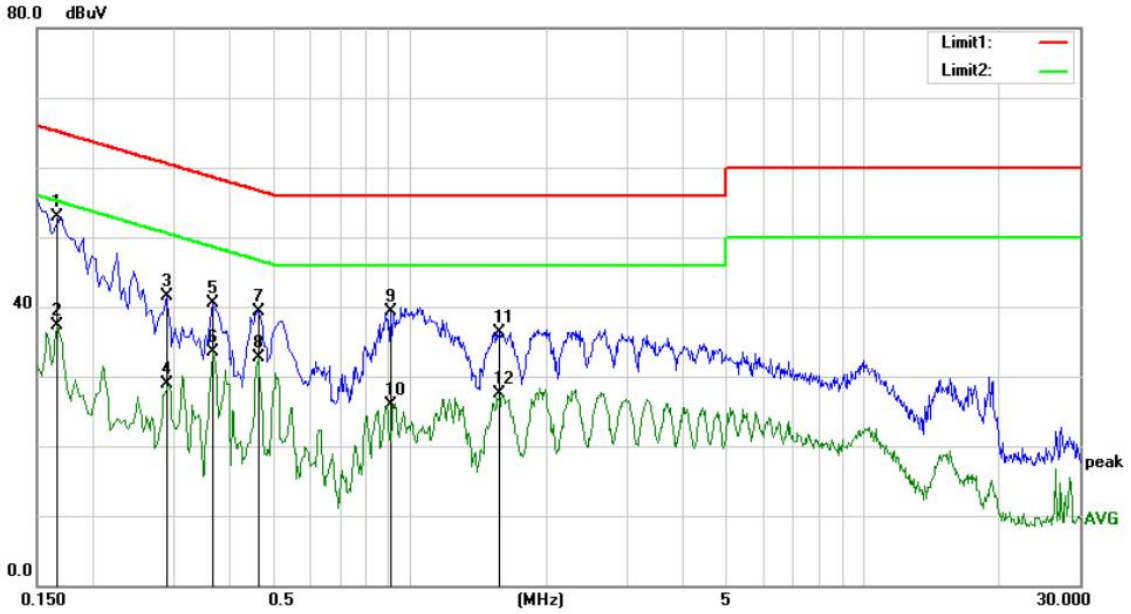

Site Conduction #1 Phase: *L1* Temperature: 22.3

No.	Mk.	Freq.	Reading Level	Correct Factor	Measure-ment	Limit	Over		
		MHz	dBuV	dB	dBuV	dBuV	dB	Detector	Comment
1	*	0.1660	43.35	9.59	52.94	65.16	-12.22	QP	
2		0.1660	27.74	9.59	37.33	55.16	-17.83	AVG	
3		0.2900	31.84	9.75	41.59	60.52	-18.93	QP	
4		0.2900	19.21	9.75	28.96	50.52	-21.56	AVG	
5		0.3660	31.06	9.50	40.56	58.59	-18.03	QP	
6		0.3660	24.10	9.50	33.60	48.59	-14.99	AVG	
7		0.4620	29.72	9.68	39.40	56.66	-17.26	QP	
8		0.4620	22.95	9.68	32.63	46.66	-14.03	AVG	
9		0.9060	29.56	9.70	39.26	56.00	-16.74	QP	
10		0.9060	16.30	9.70	26.00	46.00	-20.00	AVG	
11		1.5740	26.69	9.59	36.28	56.00	-19.72	QP	
12		1.5740	17.86	9.59	27.45	46.00	-18.55	AVG	

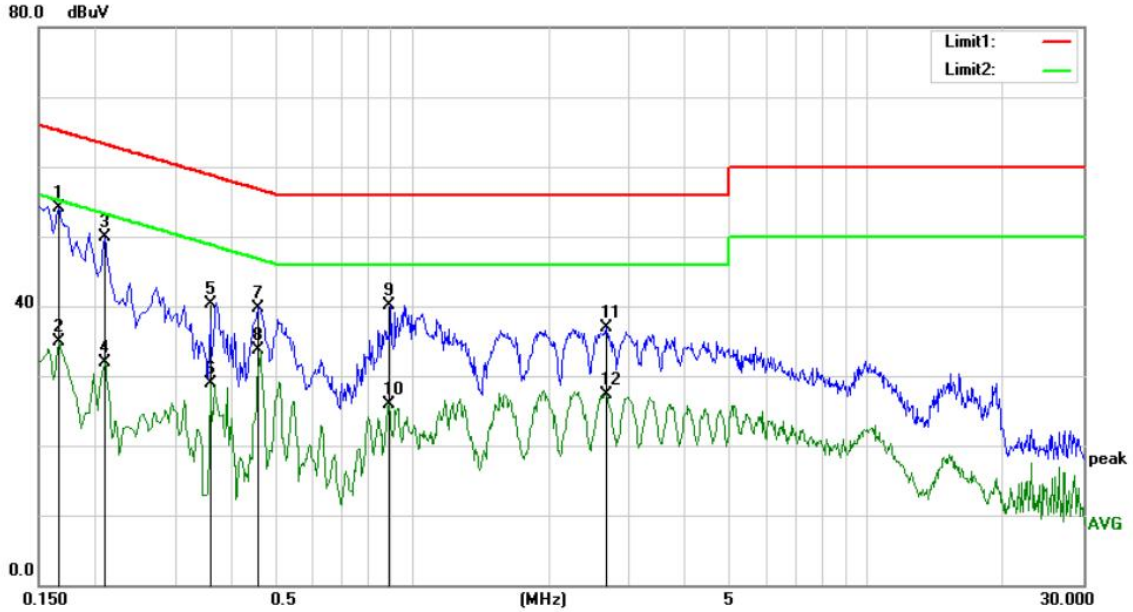

Site Conduction #1 Phase: N Temperature: 22.3

No.	Mk.	Freq.	Reading Level	Correct Factor	Measure-ment	Limit	Over		
		MHz	dBuV	dB	dBuV	dBuV	dB	Detector	Comment
1	*	0.1660	44.54	9.59	54.13	65.16	-11.03	QP	
2		0.1660	25.23	9.59	34.82	55.16	-20.34	AVG	
3		0.2100	40.26	9.65	49.91	63.21	-13.30	QP	
4		0.2100	22.20	9.65	31.85	53.21	-21.36	AVG	
5		0.3580	30.89	9.51	40.40	58.77	-18.37	QP	
6		0.3580	19.35	9.51	28.86	48.77	-19.91	AVG	
7		0.4580	29.99	9.67	39.66	56.73	-17.07	QP	
8		0.4580	24.04	9.67	33.71	46.73	-13.02	AVG	
9		0.8860	30.50	9.70	40.20	56.00	-15.80	QP	
10		0.8860	16.12	9.70	25.82	46.00	-20.18	AVG	
11		2.6700	27.24	9.58	36.82	56.00	-19.18	QP	
12		2.6700	17.72	9.58	27.30	46.00	-18.70	AVG	

8.9 ANTENNA APPLICATION

8.9.1 Antenna Requirement

Standard	Requirement
FCC CRF Part 15.203	An intentional radiator shall be designed to ensure that no antenna other than that furnished by the responsible party shall be used with the device. The use of a permanently attached antenna or of an antenna that uses a unique coupling to the intentional radiator shall be considered sufficient to comply with the provisions of this section. The manufacturer may design the unit so that a broken antenna can be replaced by the user, but the use of a standard antenna jack or electrical connector is prohibited.
FCC 47 CFR Part 15.247 (b)	If transmitting antennas of directional gain greater than 6dBi are used, the power shall be reduced by the amount in dB that the directional gain of the antenna exceeds 6dBi.
RSS-Gen Section 6.8	The applicant for equipment certification shall provide a list of all antenna types that may be used with the transmitter, where applicable (i.e. for transmitters with detachable antenna), indicating the maximum permissible antenna gain (in dBi) and the required impedance for each antenna. The test report shall demonstrate the compliance of the transmitter with the limit for maximum equivalent isotropically radiated power (e.i.r.p.) specified in the applicable RSS, when the transmitter is equipped with any antenna type, selected from this list.
RSS-247 Section 5.4	If the transmitter employs an antenna system that emits multiple directional beams, but does not emit multiple directional beams simultaneously, the total output power conducted to the array or arrays that comprise the device (i.e. the sum of the power supplied to all antennas, antenna elements, staves, etc., and summed across all carriers or frequency channels) shall not exceed the applicable output power limit. However, the total conducted output power shall be reduced by 1 dB below the specified limits for each 3 dB that the directional gain of the antenna/antenna array exceeds 6 dBi. The directional antenna gain shall be computed as the sum of 10 log (number of array elements or staves) plus the directional gain of the element or stave having the highest gain.

8.9.2 Result

PASS.

Note:
- ☑ Antenna use a permanently attached antenna which is not replaceable.
- ☐ Not using a standard antenna jack or electrical connector for antenna replacement
- ☐ The antenna has to be professionally installed (please provide method of installation)

Please refer to the attached document Internal Photos to show the antenna connector.

--------- END OF REPORT --------