Be Prepared, Be Reolink

December 2022
QSG1_A_EN

Quick Start Guide

Apply to: Reolink TrackMix Wired LTE

58.03.001.0295

@ReolinkTech https://reolink.com

EN

Contents

What's in the Box 2

Camera Introduction 3

Set up the Camera 5

Set up the Camera 8

Charge the Camera 11

Install the Camera 13

Safety Instructions of Battery Usage 18

Troubleshooting 19

Specification 21

Notification of Compliance 21

What's in the Box

Camera

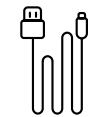

USB Cable

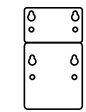

Mounting Hole Template

Quick Start Guide

Surveillance Sign

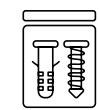

Pack of Screws

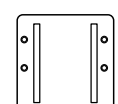

Mounting Plate

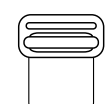

Strap

Camera Introduction

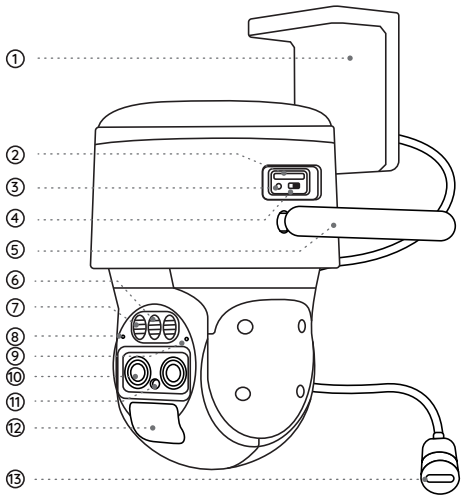

①Mount
②Nano SIM Card Slot
③Reset Button
(Press the reset button with a pin to restore factory settings.)
④Power Switch
⑤Antenna
⑥Spotlight
⑦Infrared Light
⑧Built-in Mic
⑨Status LED
⑩Lens
⑪Daylight Sensor
⑫PIR Sensor
⑬Power Port

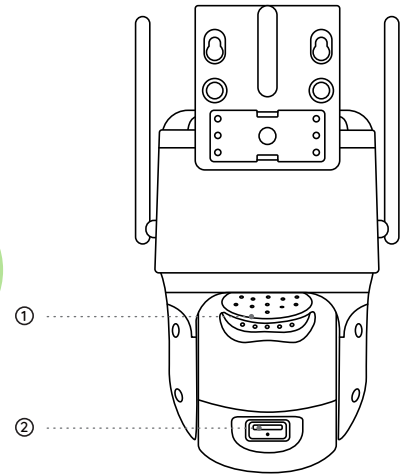

① Speaker
② Micro SD Card Slot

Set up the Camera

Activate SIM Card for the Camera

• Choose a Nano SIM card that supports WCDMA and FDD LTE.
• Some SIM cards have a PIN code. You may use your smartphone to disable the PIN first.

NOTE: Do not insert the IoT or M2M SIM into your smartphone.

Insert the SIM Card

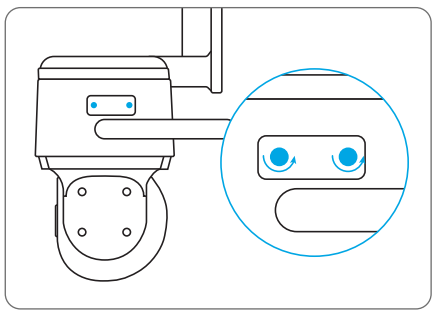

Remove the cover with the screwdriver.

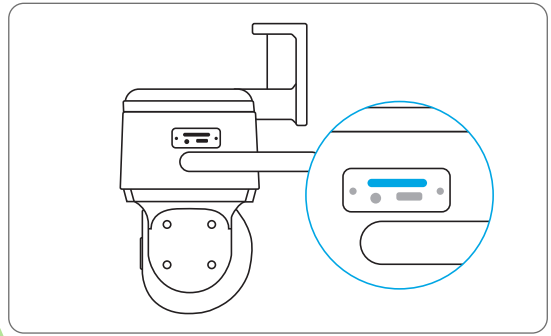

Insert a SIM-eject tool into the hole beside the SIM tray and push it in to pop open the tray. Place the SIM card into the tray, then insert the tray into the camera completely.

Register the SIM Card

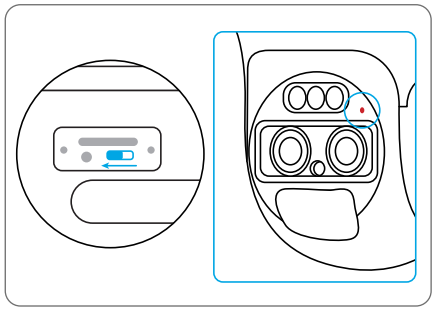

With the SIM card inserted, you can turn on the camera. Wait a few seconds and a red light will be on and solid for a couple of seconds. Then, it will go out.

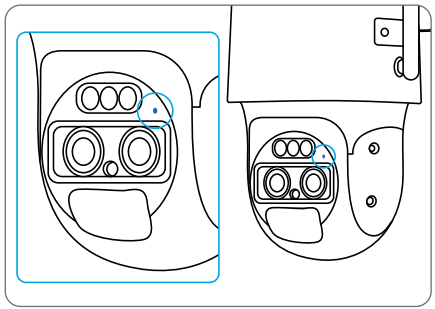

A blue LED will flash for a few seconds and then go solid before going out. You will hear a voice prompt “Network connection succeeded”, which means the camera has been successfully connected to the network.

Set up the Camera

Step 1 Scan to download the Reolink App from the App Store or Google Play store.

Available on the App Store

GET IT ON Google Play

Step 2 Loosen the screw and remove the cover, then turn on the power switch to power on the camera.

Step 3 Launch the Reolink App, click the "⊕" button in the top right corner to add the camera. Scan the QR code on the device and follow the onscreen instructions to finish initial setup.

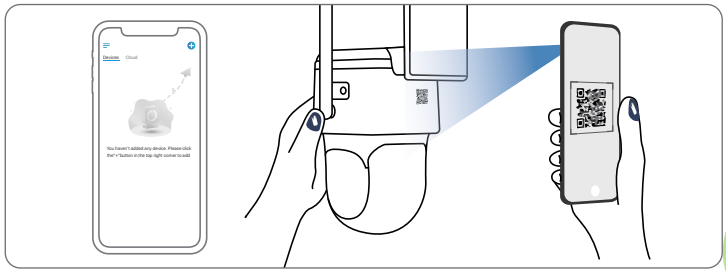

Set up the Camera on PC (Optional)

Step 1 Download and install the Reolink Client: Go to https://reolink.com > Support > App & Client.
Step 2 Loosen the screw and remove the cover, then turn on the power switch to power on the camera.
Step 3 Launch the Reolink Client, click the "⊕" button, input the UID code of the camera to add it and follow the onscreen instructions to finish initial setup.

NOTE: You may also run into the following situations:

Voice Prompt	Camera Status	Solutions
"SIM card cannot be recognized"	Camera cannot recognize this SIM card.	1. Check if the SIM card is facing the reverse direction. 2. Check if the SIM card is not fully inserted and insert it again.
"The SIM card is locked with a PIN Please disable it"	Your SIM card has a PIN.	Put the SIM card into your mobile phone and disable the PIN.
"Not registered on network. Please activate your SIM cardand check the signal strength"	Camera fails to register to the operator network.	1. Check whether your card is activated or not. If not, please call your operator to activate the SIM card. 2. The signal is weak at the current position. Please move the camera to a location with better signal. 3. Check if you are using the correct version of the camera.
"Network connection failed"	Camera fails to connect to the server.	The camera will be in Standby mode and reconnect later.
"Data call failed. Please confirm your cellular data plan is available or import the APN settings"	The SIM card has run out of data or APN settings are not correct.	1. Please check whether the data plan for the SIM card is still available. 2. Import the correct APN settings to the camera.

Charge the Camera

It's recommended to fully charge the battery before mounting the camera outdoors.

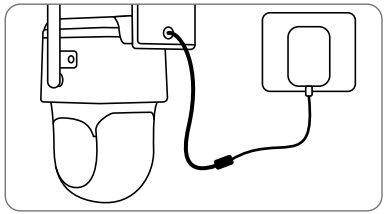

Charge the battery with a power adapter (not included).

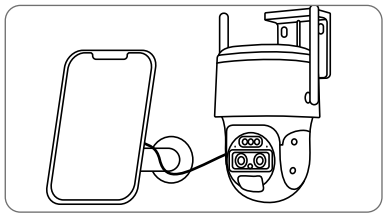

Charge the battery with the Reolink Solar Panel (not included if you only purchase the camera).

Charging Indicator LED

- **Orange LED:** Charging
- **Green LED:** Fully charged

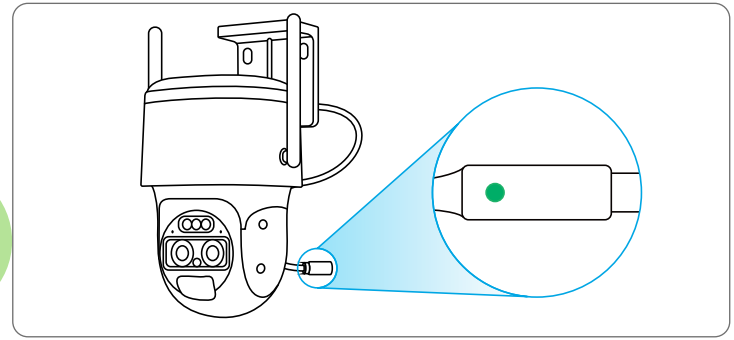

Install the Camera

• Install the camera 2-3 meters (7-10 ft) above the ground. This height maximizes the detection range of the PIR motion sensor.

• For better motion detection performance, please install the camera angularly.

NOTE: If a moving object approaches the PIR sensor vertically, the camera may fail to detect motion.

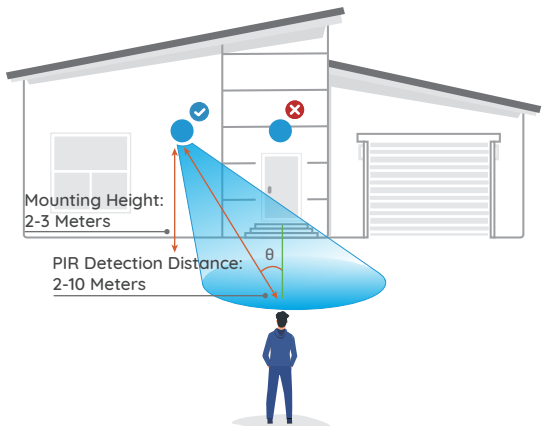

Installation Tips

• Do not face the camera towards any light sources.
• Do not point the camera towards a glass window. Otherwise, it may result in poor image quality because of the window glare caused by infrared LEDs, ambient lights or status lights.
• Do not place the camera in a shaded area and point it towards a well-lit area. Otherwise, it may result in poor image quality. To ensure best image quality, the lighting condition for both the camera and the capture object should be the same.
• Make sure the power port is not directly exposed to water or moisture and not blocked by dirt or other elements.
• The waterproof camera can work properly under conditions like rain and snow. However, it doesn't mean the camera can work underwater.
• Do not install the camera at places where rain and snow can hit the lens directly.

Mount the Camera to the Wall

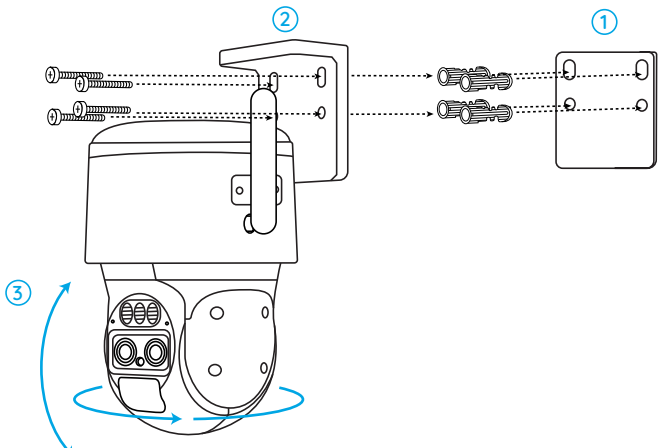

1. Drill holes in accordance with the mounting hole template.
2. Install the mount base with screws included in the package.
3. To adjust the camera direction, you may control the camera to pan and tilt via Reolink App or Client.

NOTE: Use the drywall anchors included in the package if needed.

Mount the Camera to Ceiling

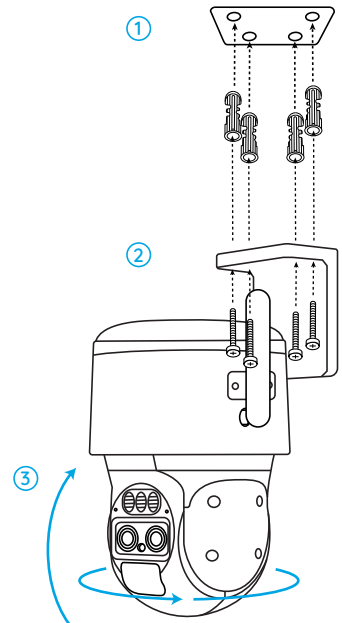

Install the Camera with Loop Strap

Secure the mounting plate to the mount base with screws and run the provided strap through the plate.

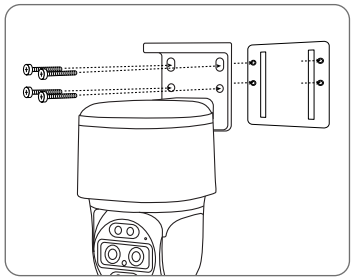

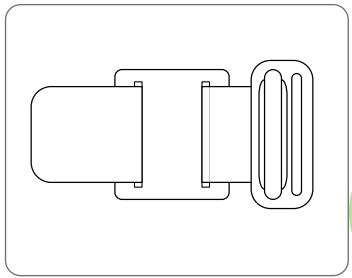

Safety Instructions of Battery Usage

The camera is not designed for running 24/7 at full capacity or around-the-clock live streaming. It's designed to record motion events and to live view remotely only when you need it. Learn useful tips on how to extend the battery life in this post https://support.reolink.com/hc/en-us/ articles/360006991893

1. The battery is built-in, so do not remove it from the camera.

2. Charge the rechargeable battery with a standard and high-quality DC 5V/9V battery charger or Reolink solar panel. Do not charge the battery with solar panels from any other brands.

3. Charge the battery when temperatures are between 0°C and 45°C and always use the battery when temperatures are between 3°C and 50°C.

4. Do not charge, use or store the battery near any ignition sources, such as fire or heaters.

5. Do not use the battery if it gives off an odor, generates heat, becomes discolored or deformed, or appears abnormal in any ways. If the battery is being used or charged, turn off the power switch or remove the charger immediately, and stop using it.

6. Always follow the local waste and recycle laws when you get rid of the used battery.

Troubleshooting

Camera is not Powering on

If your camera is not turning on, please apply the following solutions:

• Make sure you've turned the power button on.
• Charge the battery with a DC 5V/2A power adapter. When the green light is on, the battery is fully charged.

If these won't work, please contact Reolink Support https://support.reolink.com

PIR Sensor Fails to Trigger Alarm

If the PIR sensor fails to trigger any kind of alarm within the covered area, try the following solutions:

• Make sure that the PIR sensor or the camera is installed in the right direction.
• Make sure the PIR sensor is enabled or the schedule is set up properly and running.
• Check the sensitivity settings and make sure it's set up properly.
• Make sure the battery is working.
• Reset the camera and try again.

If these won't work, please contact Reolink Support https://support.reolink.com

Unable to Receive Push Notifications

If you fail to receive any push notifications when motion is detected, try the following solutions:

• Make sure the push notification has been enabled.
• Make sure the PIR schedule is set up properly.
• Check the network connection on your phone and try again.
• Make sure the camera is connected to the Internet. If the LED indicator under the camera daylight sensor is solid red or flickering red, it means that your device disconnects from the Internet.
• Make sure you've enabled Allow Notifications on your phone. Go to the System Settings on your phone and allow Reolink App to send push notifications.

If these won't work, please contact Reolink Support https://support.reolink.com

Specification

Hardware Features

Infrared Night Vision: Up to 15 Meters
Day/Night Mode: Auto Switchover
Field of View: Horizontal 96°-38°; Vertical: 55°-21°

General

Dimension: 228*147*129mm
Weight (Battery included): 1.4KG
Operating Temperature: -10°C~+55°C (14°F~131°F)
Operating Humidity: 20%~85%

Notification of Compliance

FCC Compliance Statement

This device complies with Part 15 of the FCC Rules. Operation is subject to the following two conditions: (1) this device may not cause harmful interference, and (2) this device must accept any interference received, including interference that may cause undesired operation. Changes or modifications not expressly approved by the party responsible for compliance could void the user's authority to operate the equipment.

NOTE: This equipment has been tested and found to comply with the limits for a Class B digital device, pursuant to Part 15 of the FCC Rules. These limits are designed to provide reasonable protection against harmful interference in aresidential installation. This equipment generates, uses and can radiate radio frequency energy and, if not installed and used in accordance with the instructions, may cause harmful interference to radio communications. However, there is no guarantee that interference will not occur in a particular installation.
If this equipment does cause harmful interference to radio or television reception, which can be determined by turning the equipment off and on, the user is encouraged to try to correct the interference by one or more of the following measures:

• Reorient or relocate the receiving antenna.
• Increase the separation between the equipment and receiver.
• Connect the equipment into an outlet on a circuit different from that to which the receiver is connected.
• Consult the dealer or an experienced radio/TV technician for help.

FCC RF Exposure Warning Statements

This equipment complies with FCC radiation exposure limits set forth for an uncontrolled environment. This equipment shall be installed and operated with minimum distance 20cm between the radiator & body.

Simplified EU Declaration of Conformity

Reolink declares that this device is in compliance with the essential requirements and other relevant provisions of Directive 2014/53/EU.

Correct Disposal of This Product

This marking indicates that this product should not be disposed with other household wastes throughout the EU. To prevent possible harm to the environment or human health from uncontrolled waste disposal, recycle it responsibly to promote the sustainable reuse of material resources. To return your used device, please use the return and collection systems or contact the retailer where the product was purchased. They can take this product for environment safe recycling.

Limited Warranty

This product comes with a 2-year limited warranty that is valid only if purchased from Reolink Official Store or a Reolink authorized reseller. Learn more: https://reolink.com/warranty-and-return/.

NOTE: We hope that you enjoy the new purchase. But if you are not satisfied with the product and plan to return, we strongly suggest that you reset the camera to factory default settings and take out the inserted SD card before returning.

Terms and Privacy

Use of the product is subject to your agreement to the Terms of Service and Privacy Policy at reolink.com. Keep out of reach of children.

End User License Agreement

By using the Product Software that is embedded on the Reolink product, you agree to the terms of this End User License Agreement ("EULA") between you and Reolink. Learn more: https://reolink.com/eula/.

ISED Statements

This device contains licence-exempt transmitter(s)/receiver(s) that comply with Innovation, Science and Economic Development Canada's licence-exempt RSS(s). Operation is subject to the following two conditions:

(1) This device may not cause interference.
(2) This device must accept any interference, including interference that may cause undesired operation of the device.

Radio Frequency Exposure Statement for IC
The device has been evaluated to meet general RF exposure requirements. The device can be used in mobile exposure conditions. The min separation distance is 20cm.

Technical Support

If you need any technical help, please visit our official support site and contact our support team before returning the products, https://support.reolink.com.

Déclaration ISDE

Cet appareil contient un émetteur exempté de licence / re Récepteur conforme à l'exemption de licence RSS d'innovation, sciences et développement économique Canada. Les opérations sont soumises aux deux conditions suivantes:

(1) Cet appareil ne peut pas causer d'interférences.

(2) l’appareil doit accepter toute interférence, y compris celles qui peuvent entraîner un fonctionnement indésirable de l’appareil.

Déclaration d'exposition aux radiofréquences IC

L'appareil a été évalué et répond aux exigences générales d'exposition aux RF. L'appareil peut être utilisé dans des conditions d'exposition mobiles. L'espacement minimum est de 20 cm.