CDW-B1800DL-11H

WIFI module

Software：

客　　户 Customer	客户承认 Approve（请盖印章）	日 期 Date

拟制 Design	审核 Check	批准 Approve	版本 Version	日期 Date
			V1.4	2026.07.07

深 圳 市 中 龙 通 电 子 科 技 有 限 公 司
CHINA DRAGON TECHNOLOGY LIMITED

CDW-B1800DL-11H Module Datasheet		
Module Type	Description	Remark
CDW-B1800DL-11H	AIC8800DL,b/g/n/ax,single band, BW40M,1T1R,wifi(USB2.0)+BT5.2(USB2.0),1-ANT type,no shielding	

Cdtech 中龙通

更改记录：

Reversion History：

版本 Version	日期 Date	更改内容 Modification
1.0	2024.06.12	First release

Cdtech 中龙通

1. Overview

The CDW-B1800DL-11H module is a highly integrated chip 2.4GHz Wi-Fi6, BLE5.2 for wireless application.

2. Features

- CMOS single-chip fully-integrated RF, Modem and MAC
- Support 2.4GHz Wi-Fi6
- Support 20/40MHz bandwidth
- Data rates up to 286.8Mbps@TX and 229.4Mbps@RX
- Support STA, AP, Wi-Fi Direct modes concurrently
- Support STBC, beamforming
- Support Wi-Fi6 TWT
- Support MU-MIMO, OFDMA
- Support Two NAV, Buffer Report, Spatial reuse, Multi-BSSID, intra-PPDU power save
- Support LDPC
- Support DCM, Mid-amble, UORA
- Support WEP/WPA/WPA2/WPA3-SAE Personal, MFP
- Supports USB2.0 interface
- Integrated low power timer and watchdog
- Supports all the mandatory and optionalfeatures of Bluetooth LowEnergy
- Supports advanced master and slave topologies
- Use an optimization method to assess channel quality, AFH enhancement

3. Block Diagram

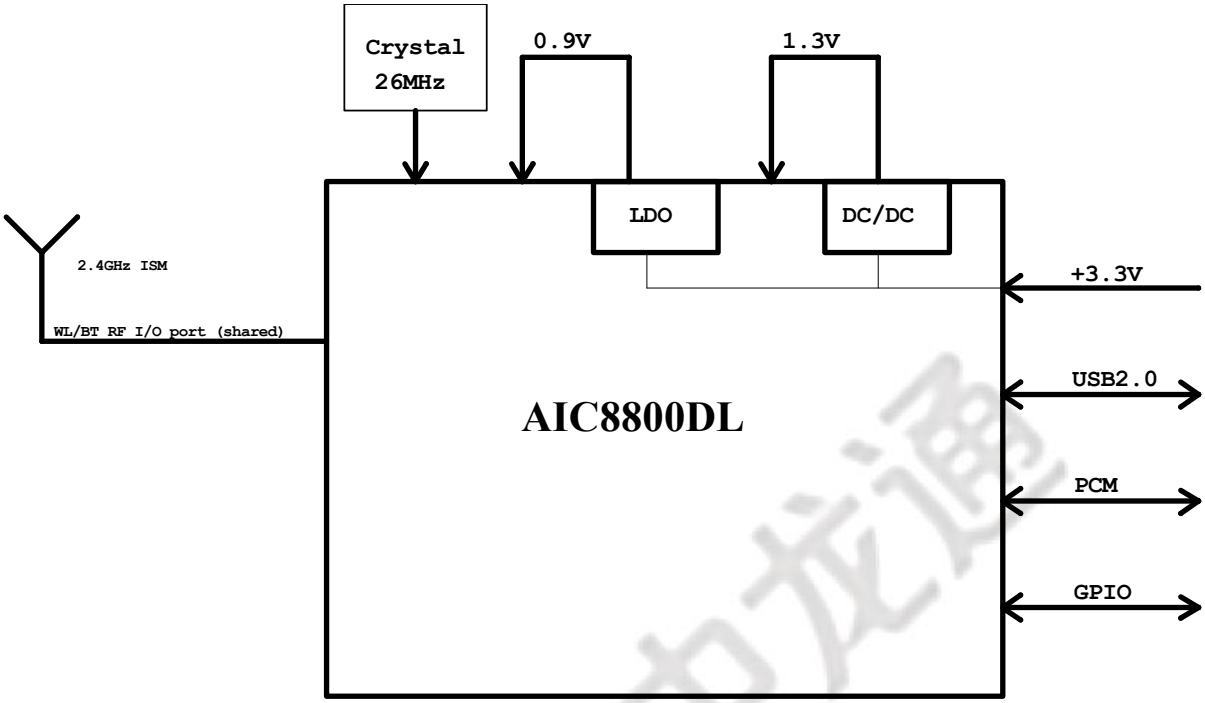

4. General Specification

Model	CDW-B1800DL-11H
Product Name	WIFI module
Major Chipset	AIC8800DL
Standard	802.11b/g/n/ax
Modulation Method	BPSK/ QPSK/ 16-QAM/ 64-QAM/256-QAM/1024-QAM
Frequency Band	2.4GHz
WiFi Interface	USB2.0
BLE Interface	USB2.0
Operating Temperature	-20° C ~ 70° C
Storage Temperature	-20° C ~ 85°C
Humidity	5% to 90% maximum
Moisture Sensitivity Level	MSL3

5. RF Specification

A. WiFi RF Specification

Feature	Description
WLAN Standard	IEEE 802.11b/g/n/ax WiFi compliant
Frequency Range	2.400 GHz ~ 2.497 GHz (2.4 GHz ISM Band)
Number of Channels	2.4GHz：Ch1 ~ Ch14
Modulation	802.11b : DQPSK, DBPSK, CCK 802.11 g/n : OFDM /64-QAM,16-QAM, QPSK, BPSK 802.11 ax : OFDM /256-QAM, 64-QAM, 16-QAM, QPSK, BPSK
Receive Sensitivity (11b,20MHz) @8% PER	- 1Mbps PER @ -97dBm, typical
	- 2Mbps PER @ -95dBm, typical
	- 5.5Mbps PER @ -92dBm, typical
	- 11Mbps PER @ -89dBm, typical
Receive Sensitivity (11g,20MHz) @10% PER	- 6Mbps PER @ -91dBm, typical
	- 9Mbps PER @ -89dBm, typical
	- 12Mbps PER @ -86dBm, typical
	- 18Mbps PER @ -83dBm, typical
	- 24Mbps PER @ -80dBm, typical
	- 36Mbps PER @ -77dBm, typical
	- 48Mbps PER @ -74dBm, typical
	- 54Mbps PER @ -72dBm, typical
Receive Sensitivity (11n,20MHz) @10% PER	- MCS=0 PER @ -90dBm, typical
	- MCS=1 PER @ -87dBm, typical
	- MCS=2 PER @ -84dBm, typical
	- MCS=3 PER @ -81dBm, typical
	- MCS=4 PER @ -78dBm, typical
	- MCS=5 PER @ -75dBm, typical

	- MCS=6 PER @ -72dBm, typical
	- MCS=7 PER @ -70dBm, typical
Receive Sensitivity (11n,40MHz) @10% PER	- MCS=0 PER @ -87dBm, typical
	- MCS=1 PER @ -84dBm, typical
	- MCS=2 PER @ -81dBm, typical
	- MCS=3 PER @ -78dBm, typical
	- MCS=4 PER @ -75dBm, typical
	- MCS=5 PER @ -72dBm, typical
	- MCS=6 PER @ -69dBm, typical
	- MCS=7 PER @ -67dBm, typical
Receive Sensitivity (11ax,20MHz) @10% PER	- HE=0 PER @ -90dBm, typical
	- HE=1 PER @ -88dBm, typical
	- HE=2 PER @ -86dBm, typical
	- HE=3 PER @ -84dBm, typical
	- HE=4 PER @ -81dBm, typical
	- HE=5 PER @ -79dBm, typical
	- HE=6 PER @ -76dBm, typical
	- HE=7 PER @ -73dBm, typical
	- HE=8 PER @ -70dBm, typical
	- HE=9 PER @ -68dBm, typical
Receive Sensitivity (11ax,40MHz) @10% PER	- HE=0 PER @ -88dBm, typical
	- HE=1 PER @ -86dBm, typical
	- HE=2 PER @ -83dBm, typical
	- HE=3 PER @ -80dBm, typical
	- HE=4 PER @ -77dBm, typical
	- HE=5 PER @ -74dBm, typical
	- HE=6 PER @ -72dBm, typical
	- HE=7 PER @ -69dBm, typical
	- HE=8 PER @ -66dBm, typical
	- HE=9 PER @ -64dBm, typical
Maximum Input Level	802.11b : -10dBm
	802.11g/n/ax : -20dBm

B. Bluetooth Specification

Feature	Description
General Specification	
Bluetooth Standard	BLE5.2
Host Interface	USB
Antenna Reference	Small antennas with 0~2 dBi peak gain
Frequency Band	2402 MHz ~ 2480 MHz
Number of Channels	BLE:40 channels
RF Specification	
Sensitivity, tolerance±2dBm	
Sensitivity @ BLE=30.8% for LE(1Mbps)	-90 dBm
Sensitivity @ BLE=30.8% for LE(2Mbps)	-91 dBm
Maximum Input Level	GFSK(1Mbps): -20 dBm
	π/4-DQPSK(2Mbps): -20 dBm

6. Recommended Operating Rating

symbol	Parameter	Minimum	Typical	Maximum	Units
VDD	3.3V supply voltage	3.0	3.3	3.6	V
VDDIO	I/O supply voltage	1.7	1.8	1.9	V
Current	3.3V rating current	--	--	800	mA

7. Footprint Dimension

7.1 No IPEX Footprint Dimension

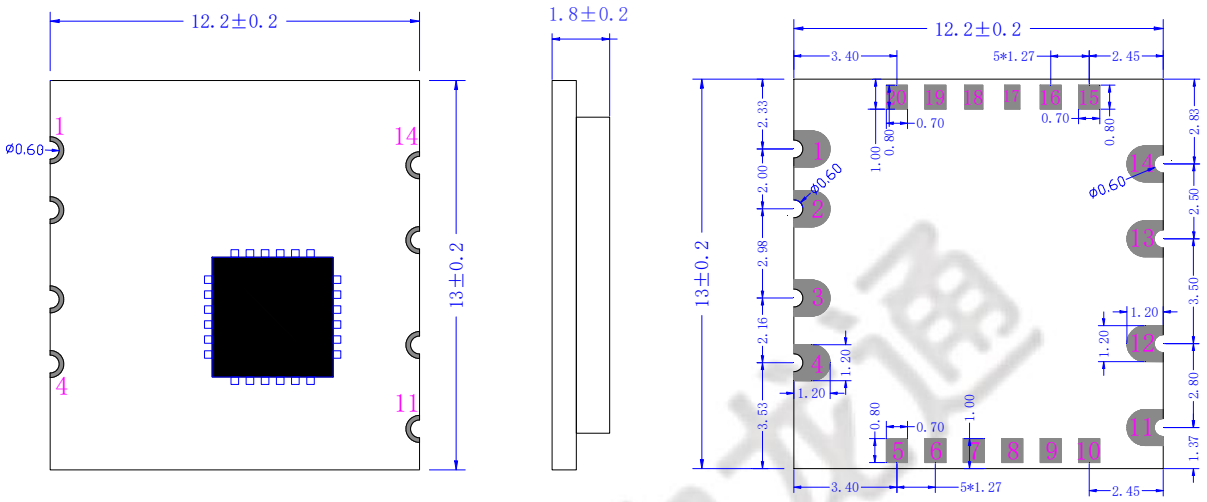

TOP VIEW SIDE VIEW TOP VIEW

7.2 IPEX Footprint Dimension

Unit:mm

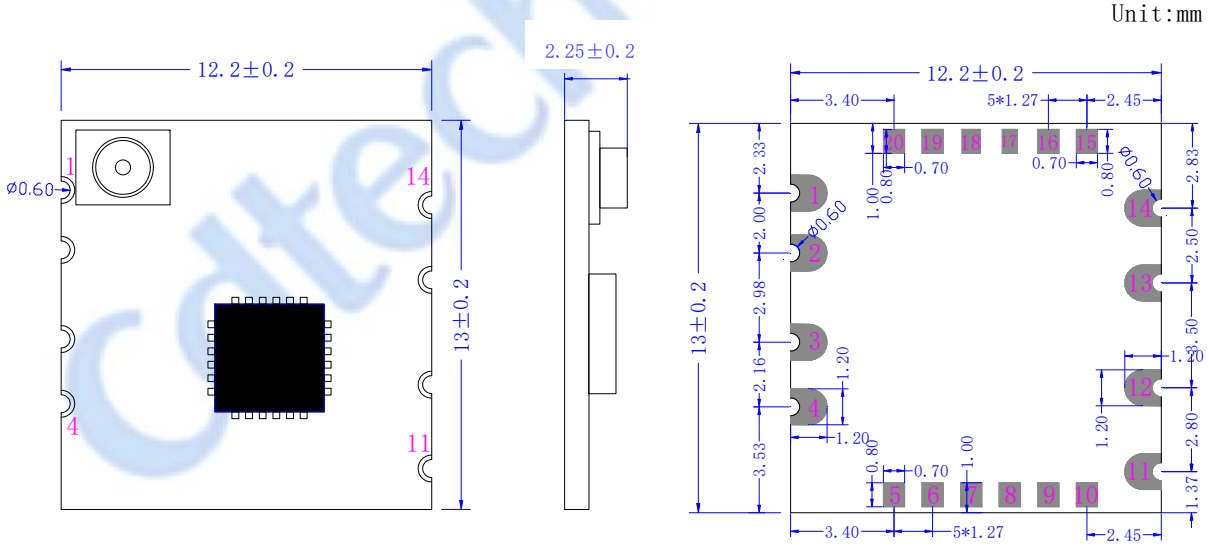

TOP VIEW SIDE VIEW TOP VIEW

7.3 No IPEX have shielding footprint Dimension

Unit:mm

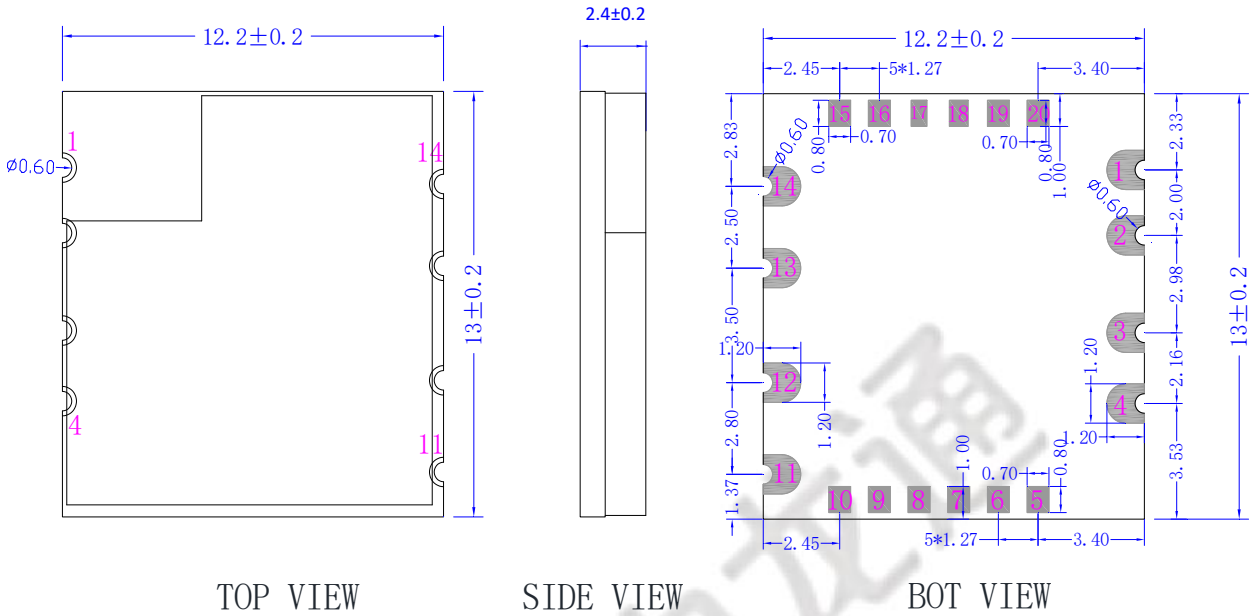

8. Pin Description

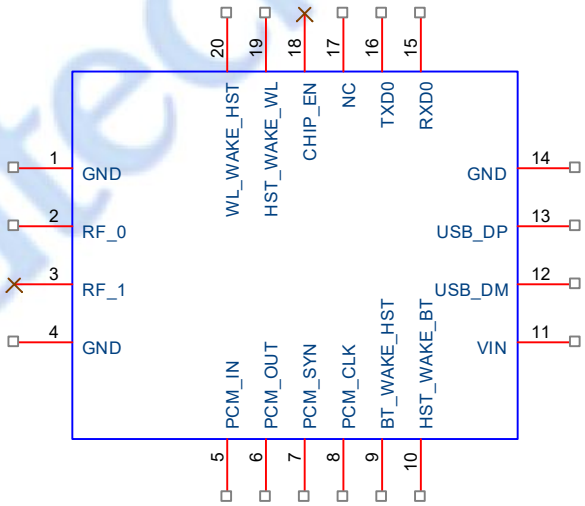

NO	Name	Description
1	GND	Ground connections
2	RF0	RF0 I/O port ;When have IPEX the PIN is NC
3	RF1	NC，Keep Floating

4	GND	Ground connections(Note: The PIN must be connected to GND)
5	PCM_IN	BLE_PCM data Input . This pin is also shared with GPIOA2.
6	PCM_OUT	BLE_PCM data Output . This pin is also shared with GPIOA3
7	PCM_SYNC	BLE_PCM frame Synchronization. This pin is also shared with GPIOA0.
8	PCM_CLK	BLE_PCM Clock. This pin is also shared with GPIOA1.
9	BT_WAKE_HOST	BLE Wakeup Host pin. This pin is also Shared with GPIOB2.
10	HOST_WAKE_BT	Host Wakeup BLE pin. This pin is also shared with GPIOB3.
11	VCC	Power supply 3.3V is required
12	USB_DM	High-Speed USB D- Signal
13	USB_DP	High-Speed USB D+ Signal
14	GND	Ground connections
15	RXD0	Floating, Debug pin
16	TXD0	Floating, Debug pin
17	NC	Floating
18	Chip_en	Low closed.
19	HOST_WAKE_WLAN	Host Wakeup WLAN pin. This pin is also shared with GPIOB0.
20	WLAN_WAKE_HOST	WLAN Wakeup Host pin. This pin is also Shared with GPIOB1.

9. Supplier

Supplier list	
Name of material	Material brand
Crystal	JWT/FK/TKD/Murata/TXC
Inductor	Sunlord/ CHILISIN/ SAMWHA/DDY
Wifi chip	AIC
Capacitance	SAMSUNG /EYANG/Murata
Resistance	UniOhm /YAGEO
PCB(12.2x13x0.8mm)	A,O,I,F

10. Physical photo

10.1 No IPEX Physical photoCDW-B1800DL-11H

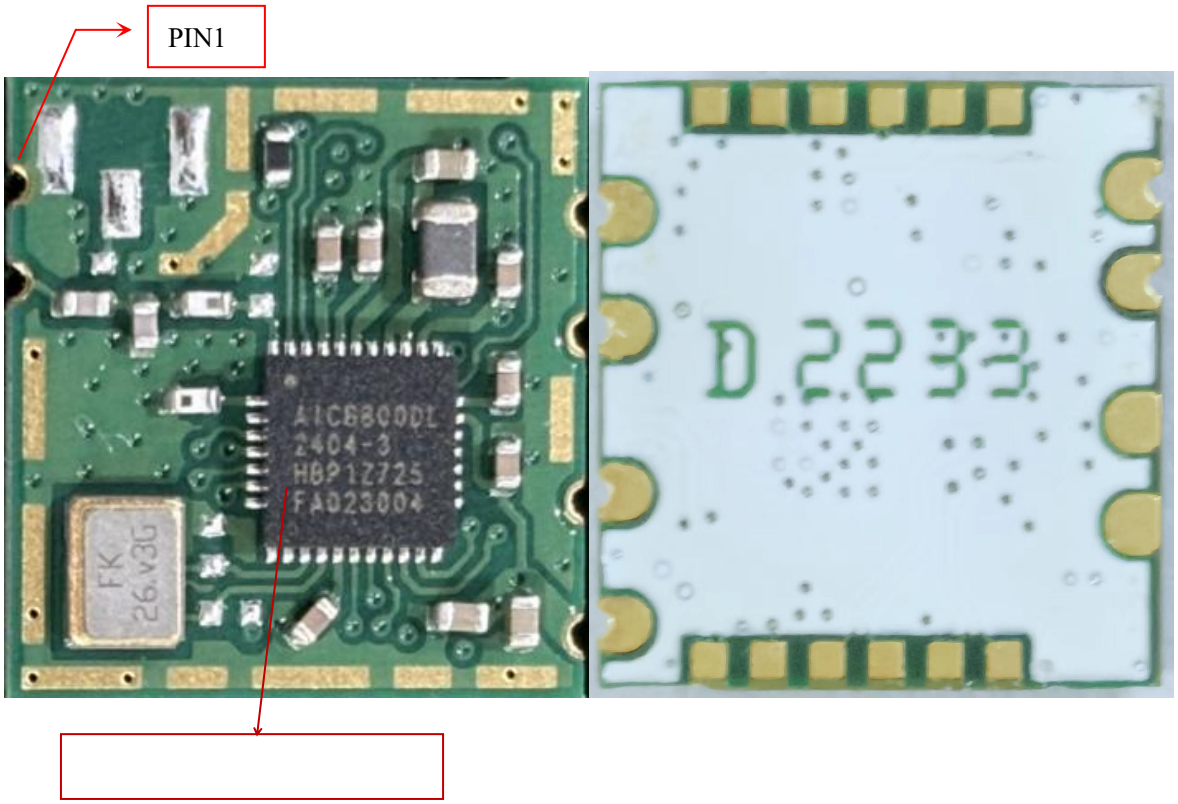

10.1 IPEX Physical photo: CDW-B1800DL-11H

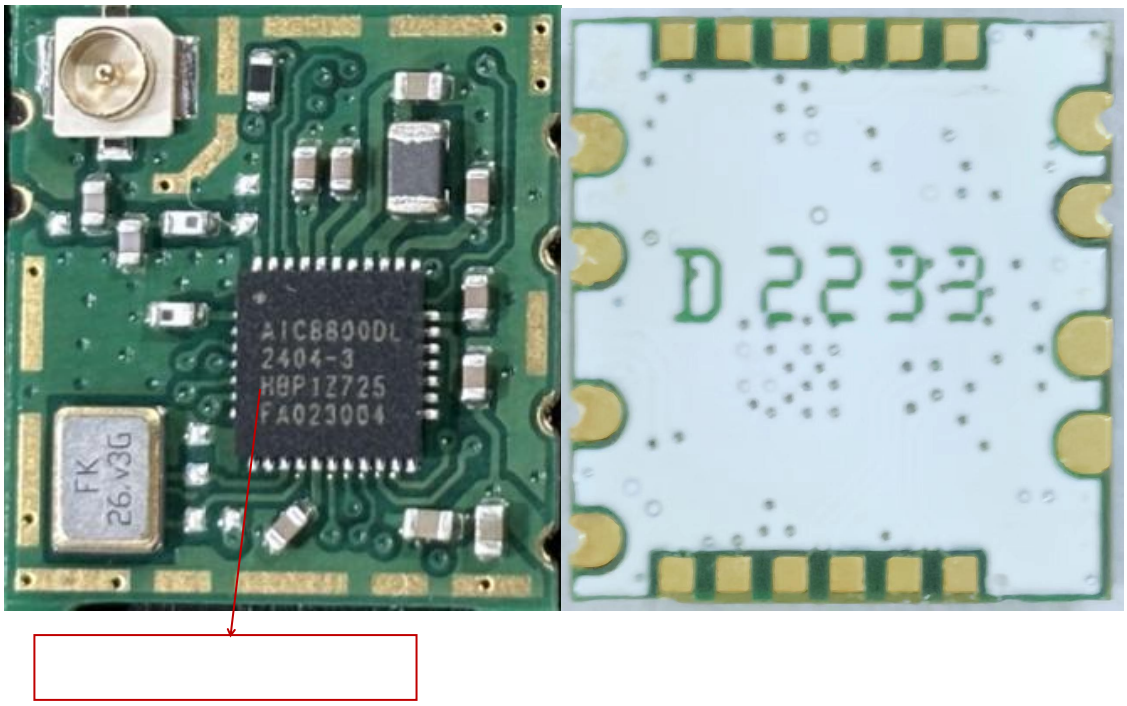

10.2 CDW-B1800DL-11H

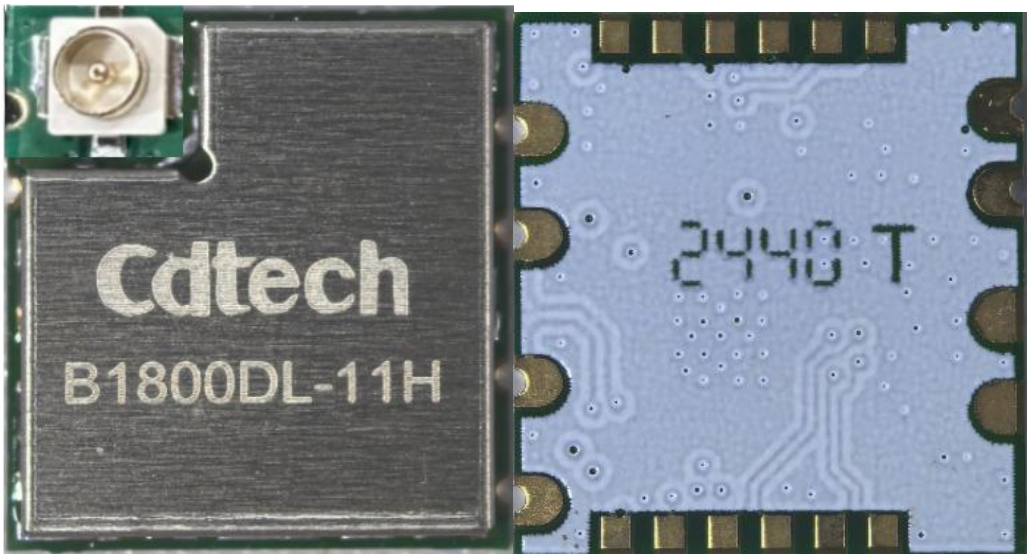

11. Layout Recommendation

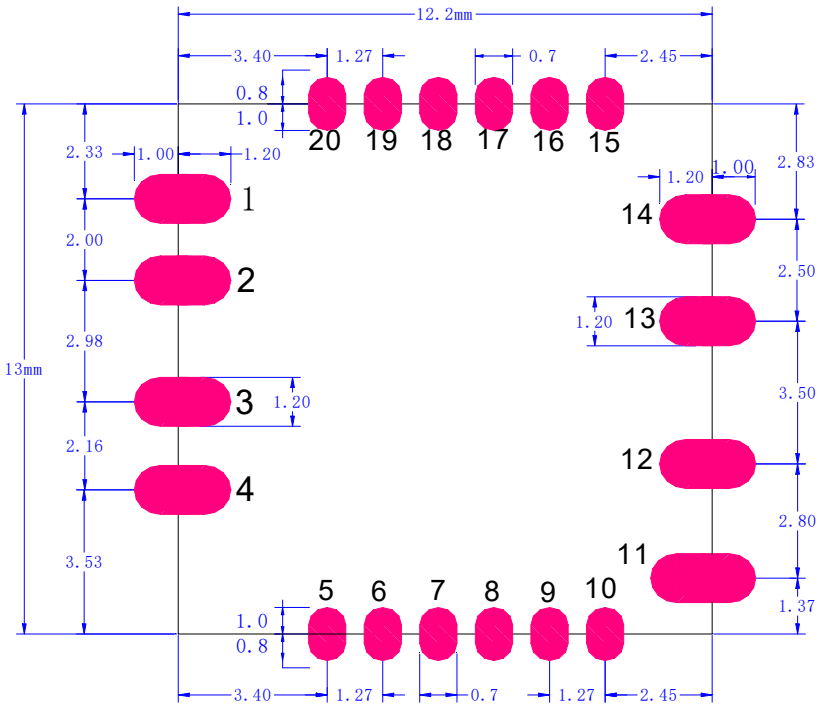

(Top view)

12. Warpage

13. Baking & storage temperature & Recommended Reflow Profile

13.1 Baking & storage temperature

A. Storage life：12 months. Storage conditions:<40℃. Relative humidity:<90%R.H.

B. After this bag is opened , devices that will be subjected to infrared reflow, vapor-phase reflow, or equivalent processing must be .(模块包装被拆后，SMT 组装之时限)

a. Check the humidity card :stored at ≦20%RH.If :30%~40%(pink)or greater than 40%(red).Labeling module has moisture absorption.(检查湿度卡：显示值应小于30%（蓝色），如：30%~40%(粉红色）或 者大于40%（红色）表示模块已吸湿气.)

b. Mounted within 168 hours at factory conditions of: t≦30%℃，≦60%R.H.
(工厂环境温度湿度管制：≦30%℃，≦60%R.H, 168小时内。)

c. Once opened, the workshop the preservation of life for168 hours.
(拆封后，车间的保存寿命为168小时.)

C. Module apart packing after 168 hours，If baking is required, devices may be baked for.
(如在拆封后的168个小时内未使用完，需要烘烤，烘烤条件如下：)

a. Modules must be to remove module moisture problem. (模块须重新烘烤，以除去模块吸湿问题.)

b. Baking temperature: 40℃±5℃, 120 hours. (烘烤温度条件：40℃±5℃，120小时).

c. After baking, put proper amount of desiccant to seal packages.
(烘烤后，放入适量的干燥剂再密封包装)

13.2 Recommended Reflow Profile

Referred IPC/JEDEC standard.

Peak Temperature : ＜250°C

Number of Times : ≤2 times

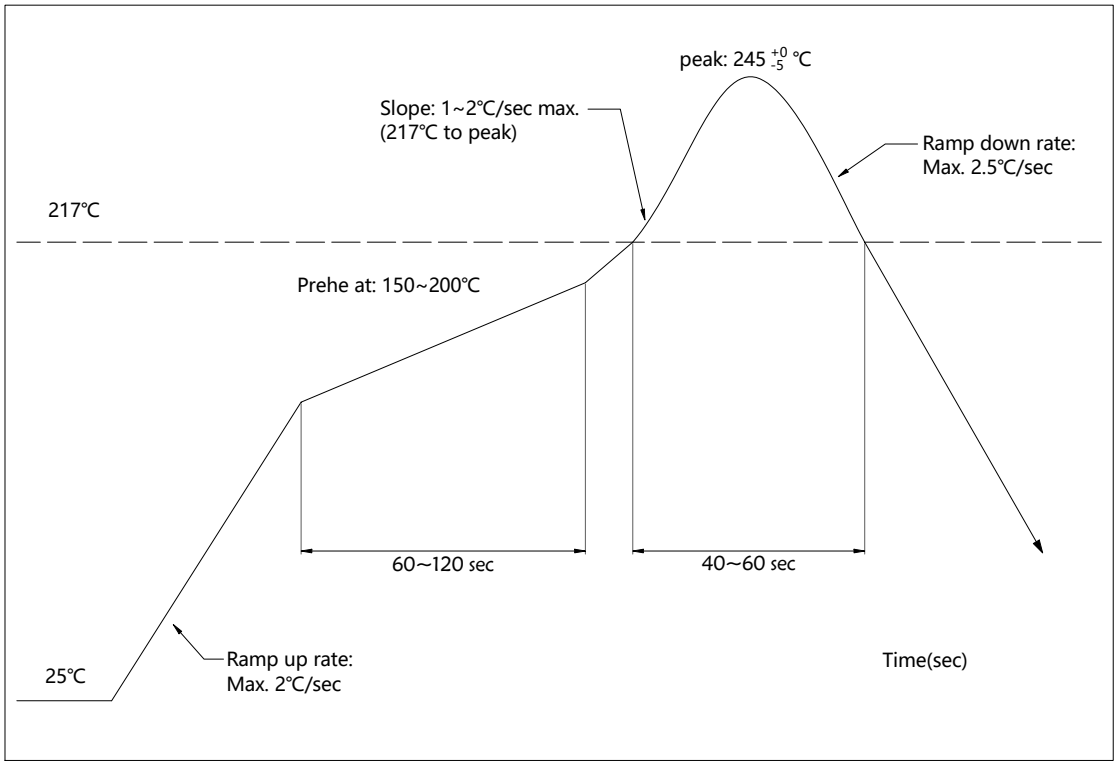

14. Packing information

14.1 Carrier size Detail:

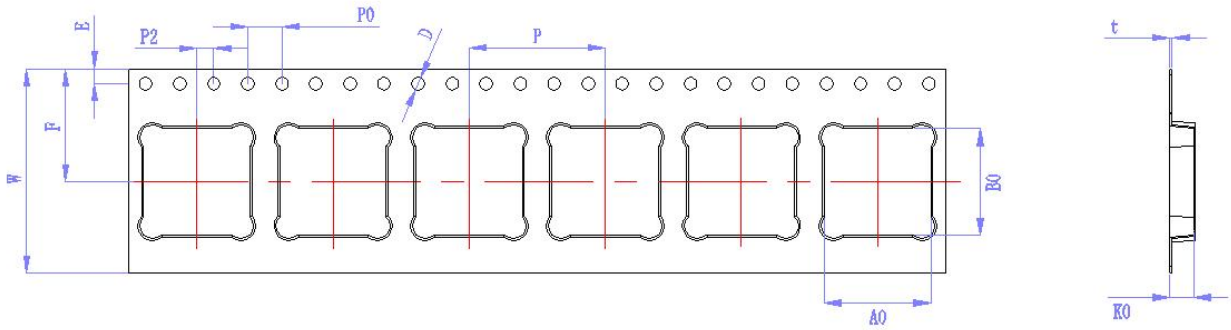

ITEM	W	A0	B0	K0	P	F	E	D	P0	P2	T
DIM	24	12.7	13.3	2.0	16	13.25	1.75	1.50	4	2	0.3
TOLE	+0.30 -0.30	+0.10 -0.10	+0.10 -0.10	+0.10 -0.10	+0.10 -0.10	+0.10 -0.10	+0.10 -0.10	+0.10 -0.10	+0.10 -0.10	+0.10 -0.10	+0.05 -0.05

14.2 Packaging Detail:

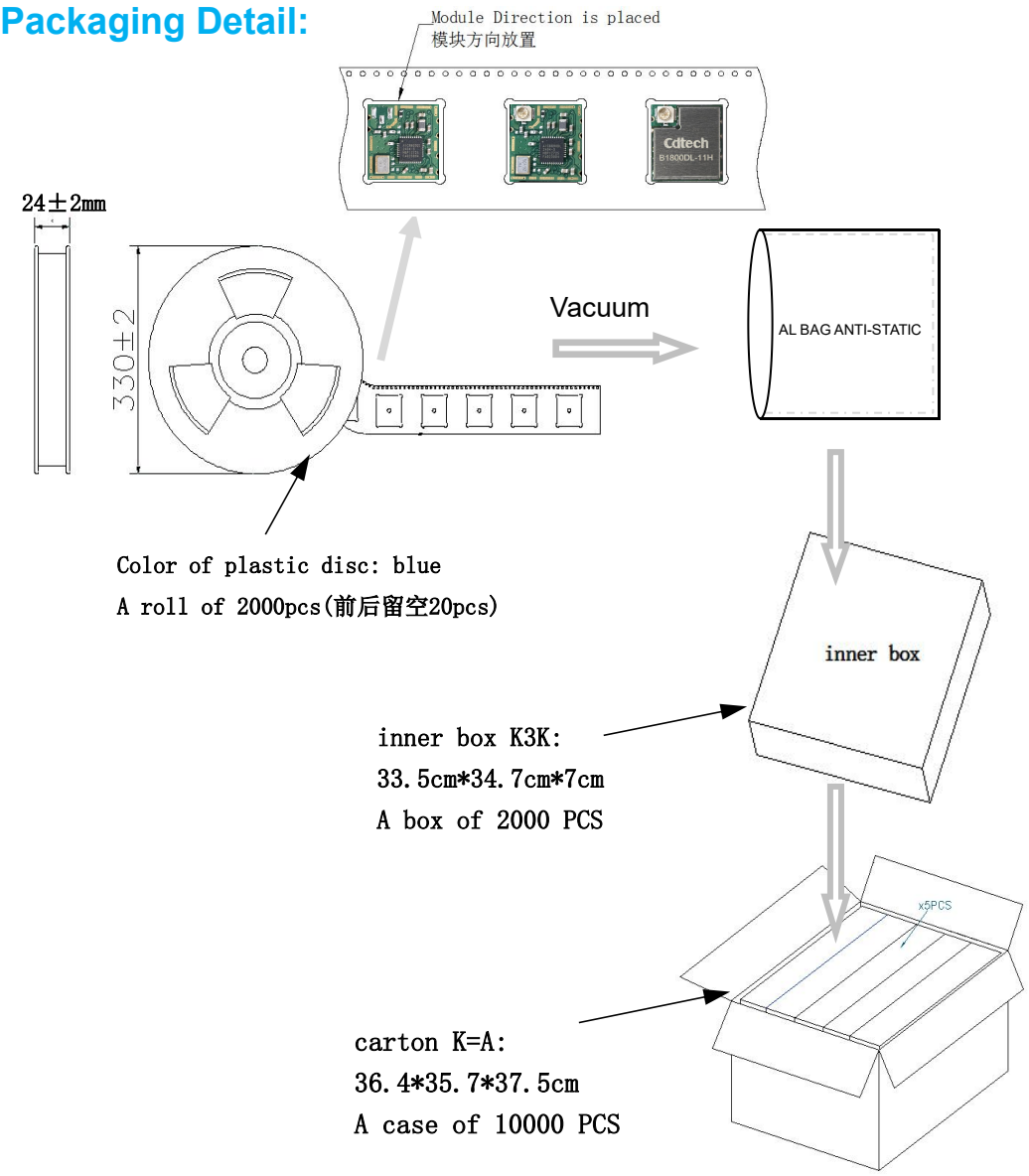

ESD CAUTION

The B1800DL series module is ESD (electrostatic discharge) sensitive device and may be damaged with ESD or spike voltage. Although B1800DL series module is with built-in ESD protection circuitry, please handle with care to avoid the permanent malfunction or the performance degradation.

FCC WARNING

FCC Caution: Any changes or modifications not expressly approved by the party responsible for compliance could void the user's authority to operate this equipment.

This device complies with Part 15 of the FCC Rules. Operation is subject to the following two conditions:

(1) This device may not cause harmful interference, and (2) this device must accept any interference received, including interference that may cause undesired operation.

This device and its antenna(s) must not be co-located or operating in conjunction with any other antenna or transmitter.

15.105 Information to the user.

(b) For a Class B digital device or peripheral, the instructions furnished the user shall include the following or similar statement, placed in a prominent location in the text of the manual:

Note: This equipment has been tested and found to comply with the limits for a Class B digital device, pursuant to part 15 of the FCC Rules.

These limits are designed to provide reasonable protection against harmful interference in a residential installation. This equipment generates, uses and can radiate radio frequency energy and, if not installed and used in accordance with the instructions, may cause harmful interference to radio communications. However, there is no guarantee that interference will not occur in a particular installation. If this equipment does cause harmful interference to radio or television reception, which can be determined by turning the equipment off and on, the user is encouraged to try to correct the interference by one or more of the following measures:

—Reorient or relocate the receiving antenna.

—Increase the separation between the equipment and receiver.

—Connect the equipment into an outlet on a circuit different from that to which the receiver is connected.

—Consult the dealer or an experienced radio/TV technician for help.

This equipment complies with FCC radiation exposure limits set forth for an uncontrolled environment. This equipment should be installed and operated with minimum distance 20 cm between the radiator and your body.

Radiation Exposure Statement:

This equipment complies with FCC radiation exposure limits set forth for an uncontrolled environment.

This transmitter must not be co-located or operating in conjunction with any other antenna or transmitter.

The availability of some specific channels and/or operational frequency bands are country dependent and are firmware programmed at the factory to match the intended destination.

The firmware setting is not accessible by the end user.

The final end product must be labelled in a visible area with the following:

“Contains Transmitter Module FCC ID: 2A4AS-2606E”

Requirement per KDB996369 D03

2.2 List of applicable FCC rules

List the FCC rules that are applicable to the modular transmitter. These are the rules that specifically establish the bands of operation, the power, spurious emissions, and operating fundamental frequencies. DO NOT list compliance to unintentional-radiator rules (Part 15 Subpart B) since that is not a condition of a module grant that is extended to a host manufacturer. See also Section 2.10 below concerning the need to notify host manufacturers that further testing is required.3

Explanation: This module meets the requirements of FCC part 15C(15.247).

2.3 Summarize the specific operational use conditions

Describe use conditions that are applicable to the modular transmitter, including for example any limits on antennas, etc. For example, if point-to-point antennas are used that require reduction in power or compensation for cable loss, then this information must be in the instructions. If the use condition limitations extend to professional users, then instructions must state that this information also extends to the host manufacturer's instruction manual. In addition, certain information may also be needed, such as peak gain per frequency band and minimum gain.

Explanation: The EUT only have one FPC antenna, Yes, the module contains a permanently attached antenna, The antenna gain is BLE/WIFI 2.4G:4.18dBi, The use condition of the prototype is mobile.

2.4 Limited module procedures

If a modular transmitter is approved as a "limited module," then the module manufacturer isresponsible for approving the host environment that the limited module is used with. The manufacturer of a limited module must describe, both in the filing and in the installation instructions, the alternative means that the limited module manufacturer uses to verify that the host meets the necessary requirements to satisfy the module limiting conditions.

A limited module manufacturer has the flexibility to define its alternative method to address the conditions that limit the initial approval, such as: shielding, minimum signaling amplitude, buffered modulation/data inputs, or power supply regulation. The alternative method could include that the limited module manufacturer reviews detailed test data or host designs prior to giving the host manufacturer approval.

This limited module procedure is also applicable for RF exposure evaluation when it is necessary to demonstrate compliance in a specific host. The module manufacturer must state how control of the product into which the modular transmitter will be installed will be maintained such that full compliance of the product is always ensured. For additional hosts other than the specific host originally granted with a limited

module, a Class II permissive change is required on the module grant to register the additional host as a specific host also approved with the module.
Explanation: The module is a single module.

2.5 Trace antenna designs

For a modular transmitter with trace antenna designs, see the guidance in Question 11 of KDB Publication 996369 D02 FAQ – Modules for Micro-Strip Antennas and traces. The integration information shall include for the TCB review the integration instructions for the following aspects: layout of trace design, parts list (BOM), antenna, connectors, and isolation requirements.

a) Information that includes permitted variances (e.g., trace boundary limits, thickness, length, width, shape(s), dielectric constant, and impedance as applicable for each type of antenna);

b) Each design shall be considered a different type (e.g., antenna length in multiple(s) of frequency, the wavelength, and antenna shape (traces in phase) can affect antenna gain and must be considered);

c) The parameters shall be provided in a manner permitting host manufacturers to design the printed circuit (PC) board layout;

d) Appropriate parts by manufacturer and specifications;

e) Test procedures for design verification; and

f) Production test procedures for ensuring compliance.

The module grantee shall provide a notice that any deviation(s) from the defined parameters of the antenna trace, as described by the instructions, require that the host product manufacturer must notify the module grantee that they wish to change the antenna trace design. In this case, a Class II permissive change application is required to be filed by the grantee, or the host manufacturer can take responsibility through the change in FCC ID (new application) procedure followed by a Class II permissive change application.

Explanation: No, The module has no tracking antenna design, is FPC antenna.

2.6 RF exposure considerations

It is essential for module grantees to clearly and explicitly state the RF exposure conditions that permit a host product manufacturer to use the module. Two types of instructions are required for RF exposure information: (1) to the host product manufacturer, to define the application conditions (mobile, portable – xx cm from a person’s body); and (2) additional text needed for the host product manufacturer to provide to end users in their end-product manuals. If RF exposure statements and use conditions are not provided, then the host product manufacturer is required to take responsibility of the module through a change in FCC ID (new application).

Explanation: This module complies with FCC RF radiation exposure limits set forth for an uncontrolled environment, This equipment should be installed and operated with a minimum distance of 20 centimeters between the radiator and your body." This

module is designed to comply with the FCC statement,
FCC ID: 2A4AS-2606E

2.7 Antennas

A list of antennas included in the application for certification must be provided in the instructions. For modular transmitters approved as limited modules, all applicable professional installer instructions must be included as part of the information to the host product manufacturer. The antenna list shall also identify the antenna types (monopole, PIFA, dipole, etc. (note that for example an “omni-directional antenna” is not considered to be a specific “antenna type”)).

For situations where the host product manufacturer is responsible for an external connector, for example with an RF pin and antenna trace design, the integration instructions shall inform the installer that unique antenna connector must be used on the Part 15 authorized transmitters used in the host product. The module manufacturers shall provide a list of acceptable unique connectors.

Explanation: The EUT only have one FPC antenna, Yes, the module contains a permanently attached antenna, The antenna gain is BLE/WIFI 2.4G:4.18dBi.

2.8 Label and compliance information

Grantees are responsible for the continued compliance of their modules to the FCC rules. This

includes advising host product manufacturers that they need to provide a physical or e-label stating “Contains FCC ID” with their finished product. See Guidelines for Labeling and User Information for RF Devices – KDB Publication 784748.

Explanation: The host system using this module, should have label in a visible area indicated the following texts: "Contains FCC ID: 2A4AS-2606E.

2.9 Information on test modes and additional testing requirements[5]

Additional guidance for testing host products is given in KDB Publication 996369 D04 Module Integration Guide. Test modes should take into consideration different operational conditions for a stand-alone modular transmitter in a host, as well as for multiple simultaneously transmitting modules or other transmitters in a host product.

The grantee should provide information on how to configure test modes for host product evaluation for different operational conditions for a stand-alone modular transmitter in a host, versus with multiple, simultaneously transmitting modules or other transmitters in a host.

Grantees can increase the utility of their modular transmitters by providing special means, modes, or instructions that simulates or characterizes a connection by enabling a transmitter. This can greatly simplify a host manufacturer’s determination that a module as installed in a host complies with FCC requirements.

Explanation: WiFiRanger, A CHINA DRAGON TECHNOLOGY LIMITED can increase the utility of our modular transmitters by providing instructions that simulates or characterizes a connection by enabling a transmitter.

2.10 Additional testing, Part 15 Subpart B disclaimer

The grantee should include a statement that the modular transmitter is only FCC authorized for the specific rule parts (i.e., FCC transmitter rules) listed on the grant, and that the host product manufacturer is responsible for compliance to any other FCC rules that apply to the host not covered by the modular transmitter grant of certification. If the grantee markets their product as being Part 15

Subpart B compliant (when it also contains unintentional-radiator digital circuity), then the grantee shall provide a notice stating that the final host product still requires Part 15 Subpart B compliance testing with the modular transmitter installed.

Explanation: The host shoule be evaluated by the FCC Subpart B.

This product uses FPC antenna with a maximum antenna gain of BLE/WIFI 2.4G:4.18dBi.

2.11 Note EMI Considerations

Note that a host manufacture is recommended to use D04 Module Integration Guide recommending as "best practice" RF design engineering testing and evaluation in case non-linear interactions generate additional non-compliant limits due to module placement to host components or properties

For standalone mode, reference the guidance in D04 Module Integration Guide and for simultaneous mode7; see D02 Module Q&A Question 12, which permits the host manufacturer to confirm compliance.

Explanation: The customer is an independent module and has been implemented in accordance with D04.

2.12 How to make changes

Since . only Grantees are permitted to make permissive changes, it is recommended that module manufactures provide contact information and some guidance to host providers in the integration instructions if they expect their module will be used differently than granted.

Explanation: Contact Information: We have provided our technical support contact (email: chenyx2@reolink.com.cn) for host manufacturers to reach us regarding any proposed changes to the module's operational conditions or integration method.

IC statement

This device contains licence-exempt transmitter(s)/receiver(s) that comply with Innovation, Science and Economic DevelopmentCanada's licence-exempt RSS(s). Operation is subject to the following two conditions:

(1) This device may not cause interference.

(2) This device must accept any interference, including interference that may cause undesired operation of the device.

Cet appareil contient un émetteur (S)/ récepteur (S) exempté (S) de licence qui est conforme Avec l'innovation, la Science

Et les RSS exemptées de permis de développement économique Canada. Le fonctionnement est Sous réserve de ce qui suit

Deux conditions:

(1) ce dispositif ne peut pas causer d'interférence.

(2) ce dispositif doit accepter toute interférence, y compris l'interférence qui peut Provoquer un fonctionnement indésirable de l'appareil.

This transmitter must not be co-located or operating in conjunction with any other antenna ortransmitter. This equipment should be installed and operated with a minimum distance of 20centimeters between the radiator and your body.

Cet émetteur ne doit pas être Co-placé ou ne fonctionnant en même temps qu'aucune autre antenne ouémetteur. Cet équipementdevrait être installé et actionné avec une distance minimum de 20 centimètres entre le radiateur et votre corps.

The radio transmitter IC: 28290-2606E has been approved by The Ministry of Innovation, Science and Economic Development of Canada to use the following antenna types with the specified maximum allowed gain. Antenna types not included in this list, whose gain is higher than the maximum gain of any type listed, are strictly prohibited from use with this device.

Cet émetteur radio IC : 28290-2606E a été approuvé par Innovation, Sciences et Développement économique Canada pour fonctionner avec les types d'antenne énumérés ci-dessous, avec le gain maximal admissible indiqué. Les types d'antenne non inclus dans cette liste qui ont un gain supérieur au gain maximum indiqué pour tout type répertorié sont strictement interdits pour une utilisation avec cet appareil.

Type of antenna:	FPC antenna

Antenna Gain:	2.4G :2400-2500(4.18dBi)
Impedance:	50hm
Manufacture:	SHENZHEN 3GTX ANTENNA TECHNOLOGY CO.,LTD.
Model:	CDW-B1800DL-11H