Test Report for Antenna Specifications for SU8NST

Thursday March 16th, 2023

Table of Contents

Test Report for Antenna Specifications for SU8NST ***1***

Frequency range and operation ***2***

Antenna type ***2***

Antenna Gain ***2***

Measurement Test method ***2***

Test Equipment used: ***2***

Test set up ***2***

RADIATION PATTERN ***3***

WiFi-1 Antenna **3**

WiFi-2 Antenna **6**

BT Antenna **9**

Frequency range and operation

WiFi-1 Antenna: 2.412 to 2.472 GHz and 5.18 to 5.825 GHz
WiFi-2 Antenna: 2.412 to 2.472 GHz and 5.18 to 5.825 GHz
Bluetooth Antenna: 2.402 to 2.48 GHz

Antenna type

WiFi-1 Antenna: FPC ,
WiFi-2 Antenna: LDS
Bluetooth Antenna: Chip

Antenna Gain

Band	**Peak Gain (dBi)**		
	Wi-Fi ANT 1	**Wi-Fi ANT 2**	**BT ANT**
2.4GHz	0.70 dBi	-5.10 dBi	2.42
5GHz Band I (5150-5250MHz)	0.90 dBi	0.20 dBi	
5GHz Band II (5250-5350MHz)	2.40 dBi	0.20 dBi	
5GHz Band III (5470-5725MHz)	1.80 dBi	1.10 dBi	
5GHz Band IV (5725-5850MHz)	-0.10 dBi	1.00 dBi	

Measurement Test method

Large circle cutting method

Test Equipment used:

Chamber：ETS 8500

Equipment：E5071C

Test set up

Refer to document – 'SU8NST_Antenna Report STC'

Device Image and Antenna locations – Refer to document – 'SU8NST_Antenna Report STC''

RADIATION PATTERN

WiFi-1 Antenna

2440 MHz

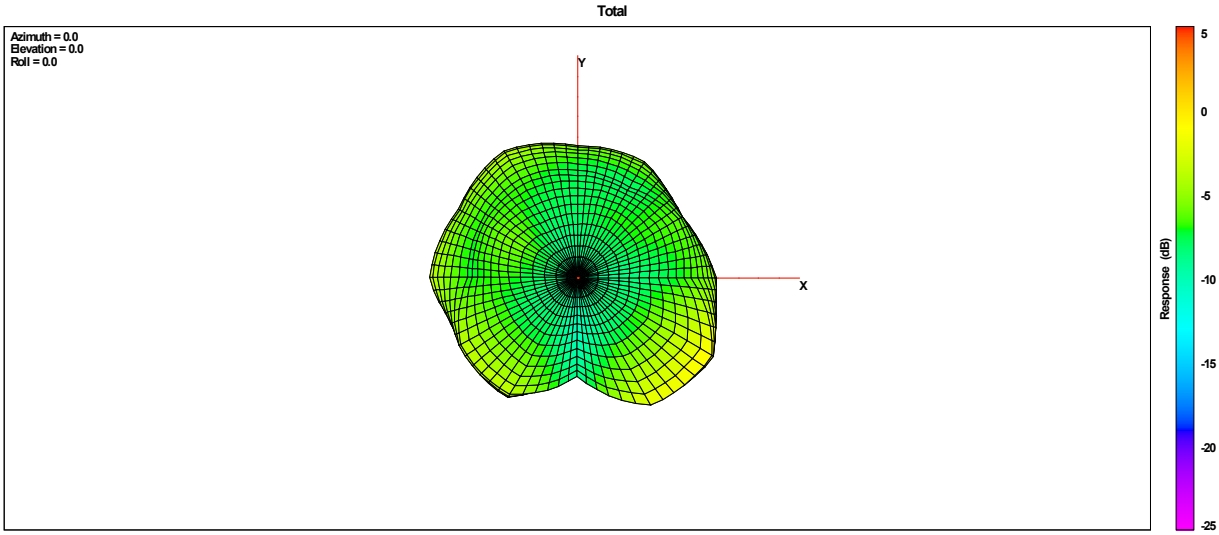

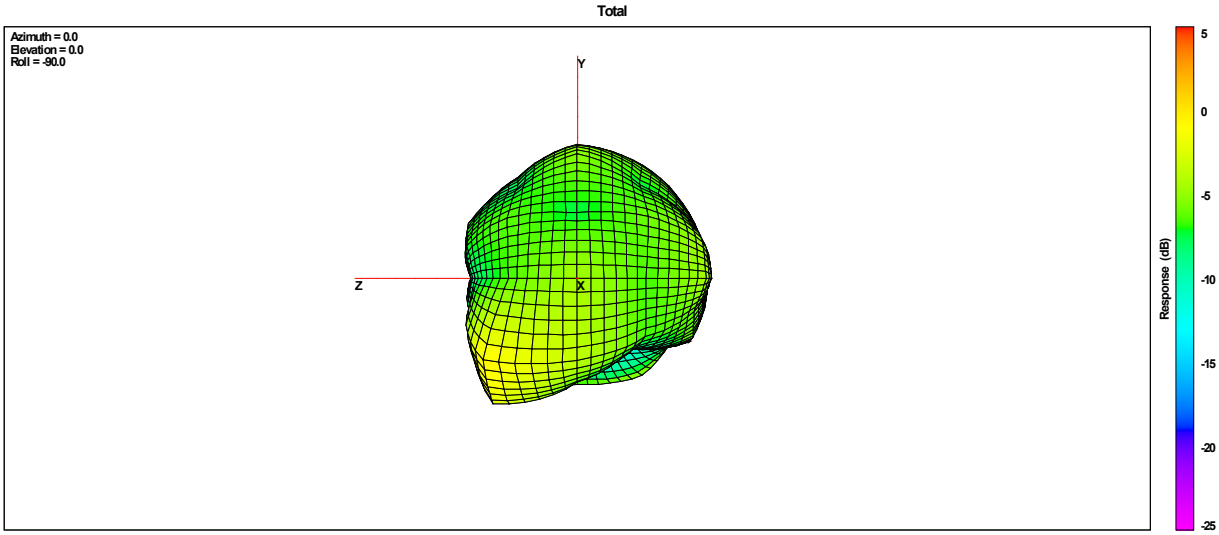

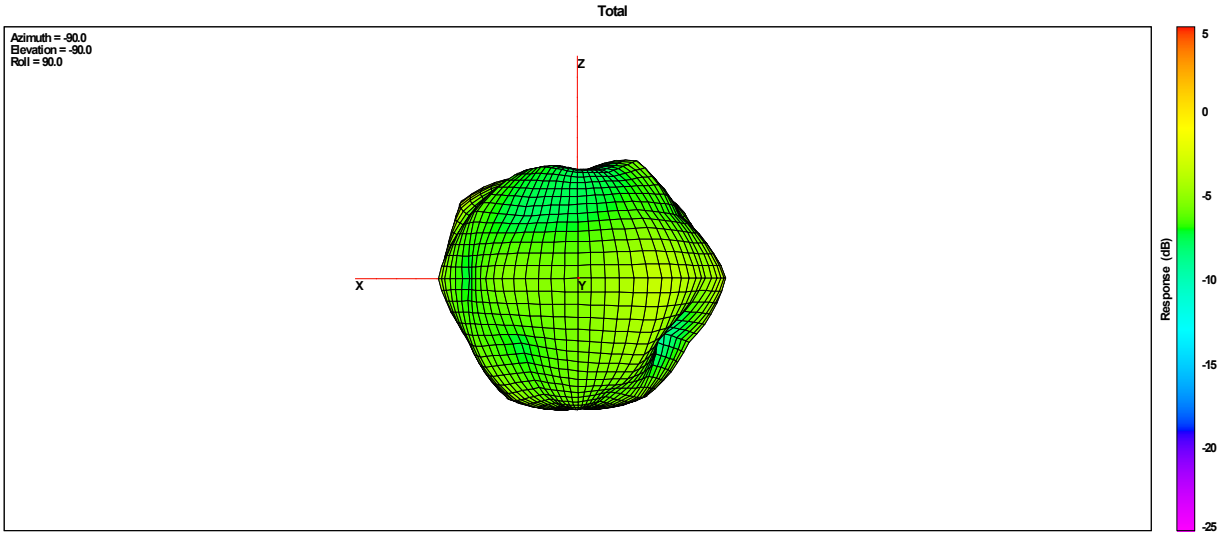
Total
Azimuth = -90.0
Elevation = -90.0
Roll = 90.0
Z
X
Y
Response (dB)
5
0
-5
-10
-15
-20
-25

5500 MHz

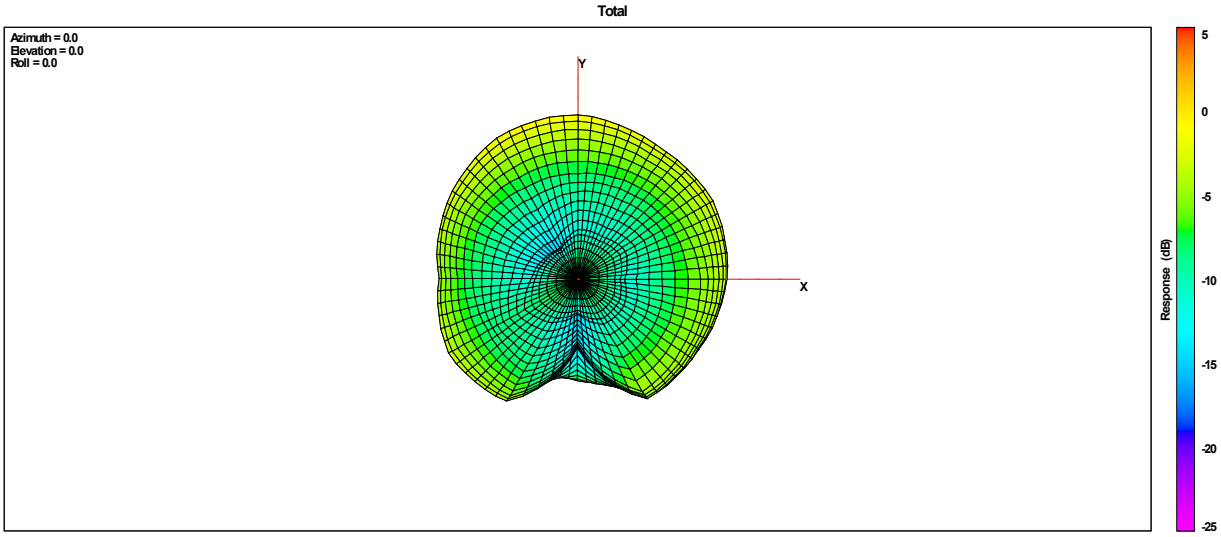
Total
Azimuth = 0.0
Elevation = 0.0
Roll = 0.0
Y
X
Response (dB)
5
0
-5
-10
-15
-20
-25

Total

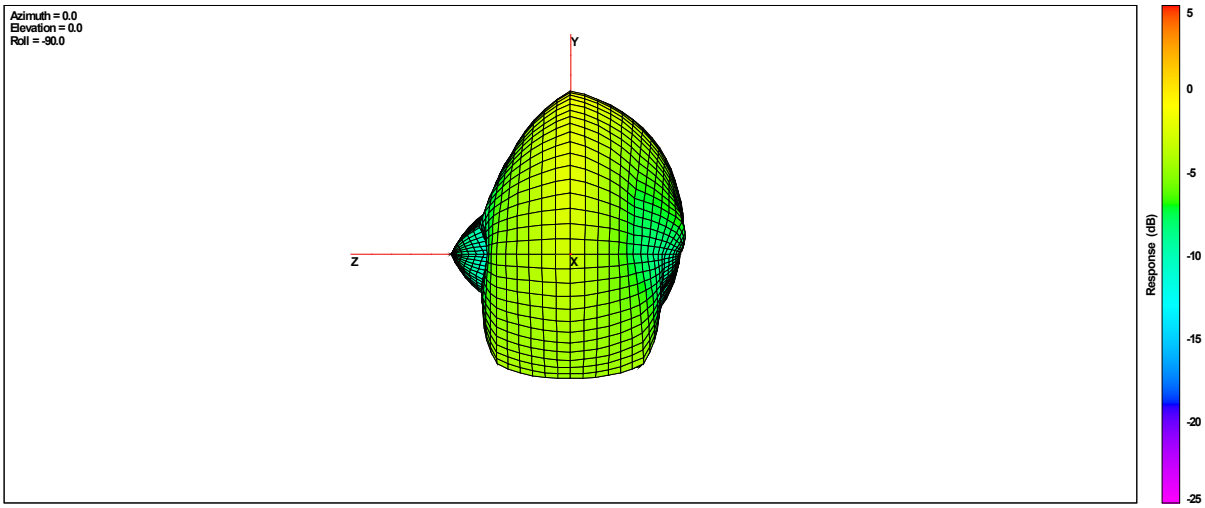
Azimuth = 0.0
Elevation = 0.0
Roll = -90.0
Y
Z
X
Response (dB)
5
0
-5
-10
-15
-20
-25

Total

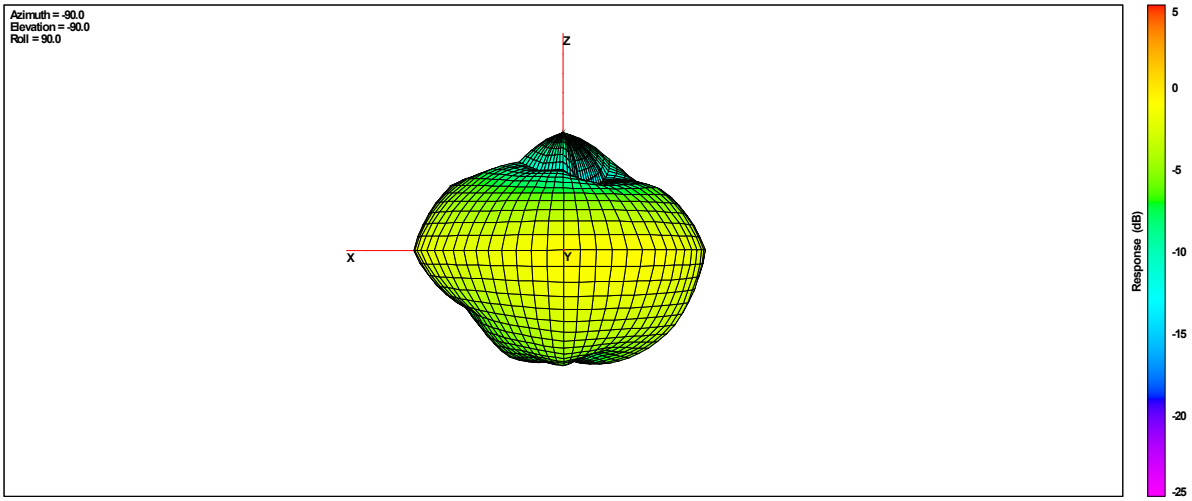
Azimuth = -90.0
Elevation = -90.0
Roll = 90.0
Z
X
Y
Response (dB)
5
0
-5
-10
-15
-20
-25

WiFi-2 Antenna

2440 MHz

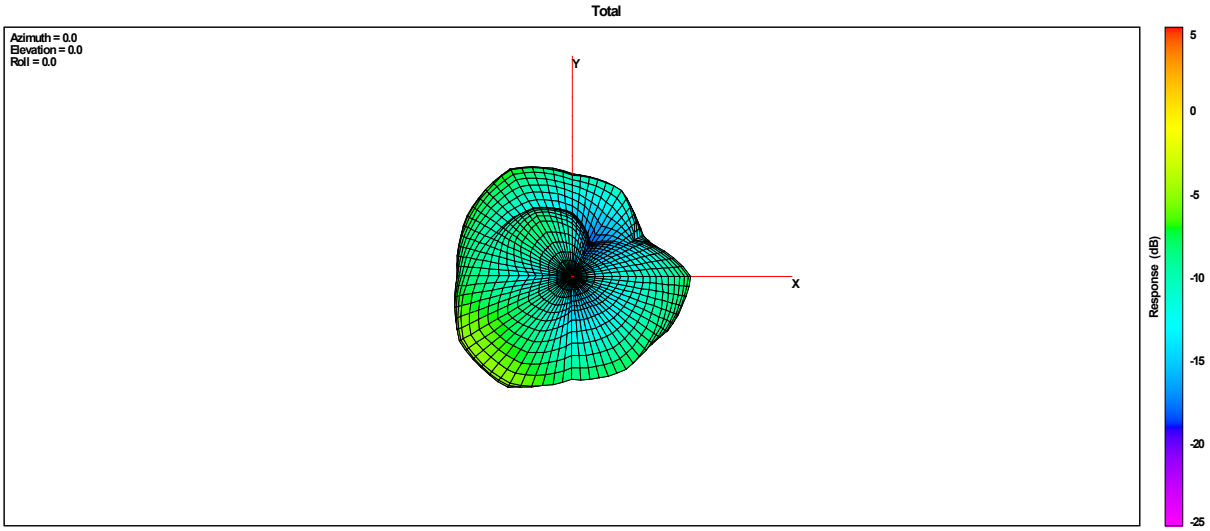

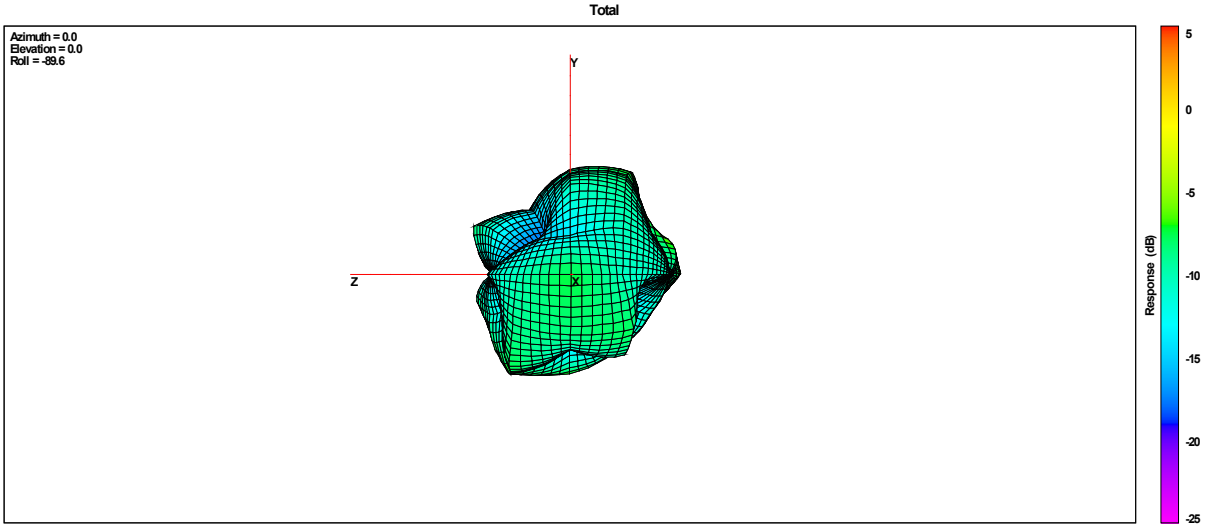

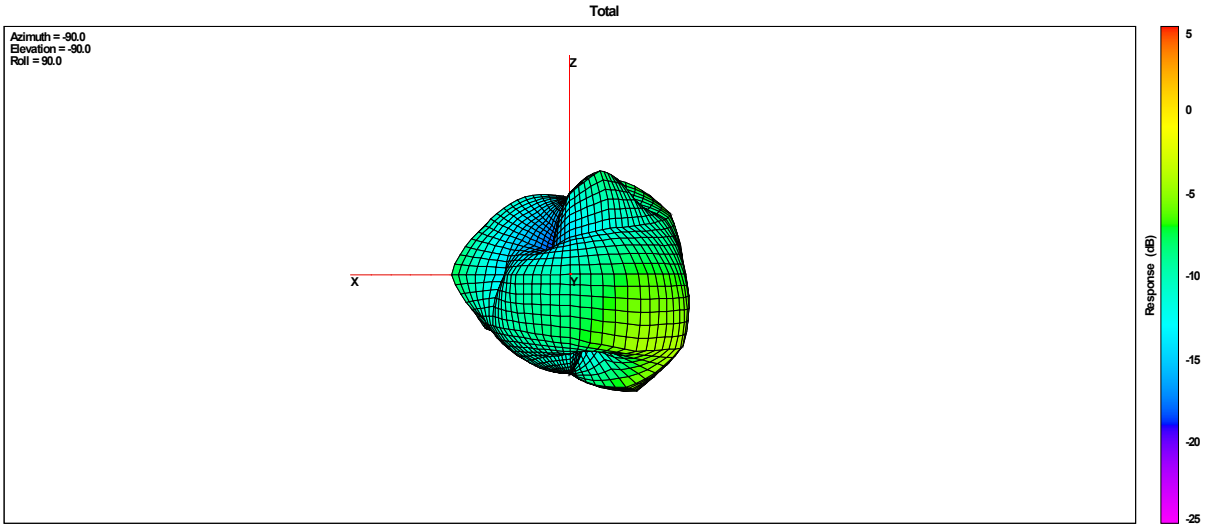
Total
Azimuth = -90.0
Elevation = -90.0
Roll = 90.0
Z
X
Y
Response (dB)
5
0
-5
-10
-15
-20
-25

5500 MHz

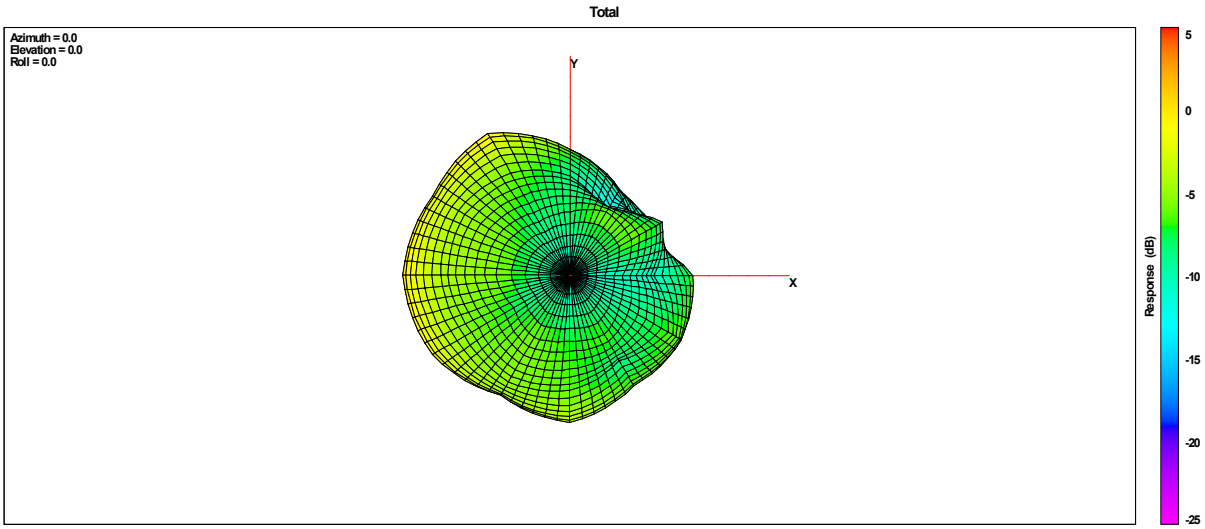
Total
Azimuth = 0.0
Elevation = 0.0
Roll = 0.0
Y
X
Response (dB)
5
0
-5
-10
-15
-20
-25

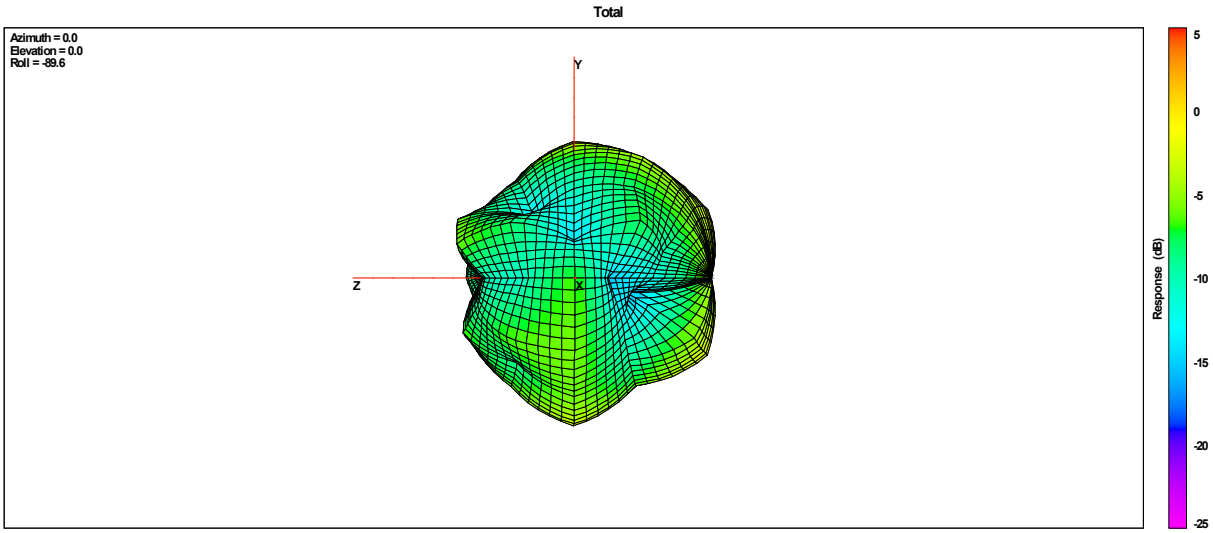
Total
Azimuth = 0.0
Elevation = 0.0
Roll = -89.6
Y
Z
X
Response (dB)
5
0
-5
-10
-15
-20
-25

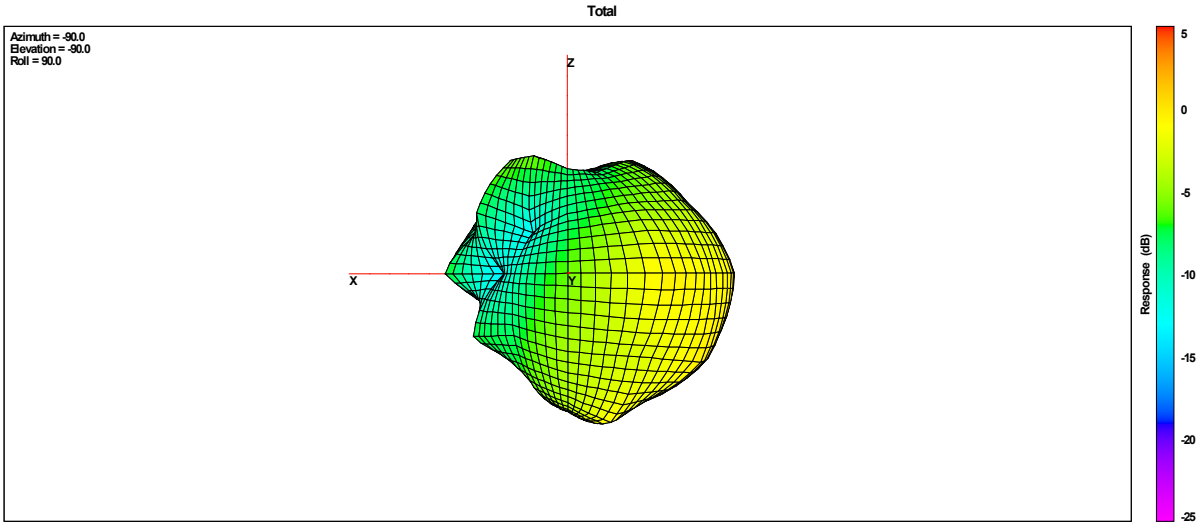
Total
Azimuth = -90.0
Elevation = -90.0
Roll = 90.0
Z
X
Y
Response (dB)
5
0
-5
-10
-15
-20
-25

BT Antenna
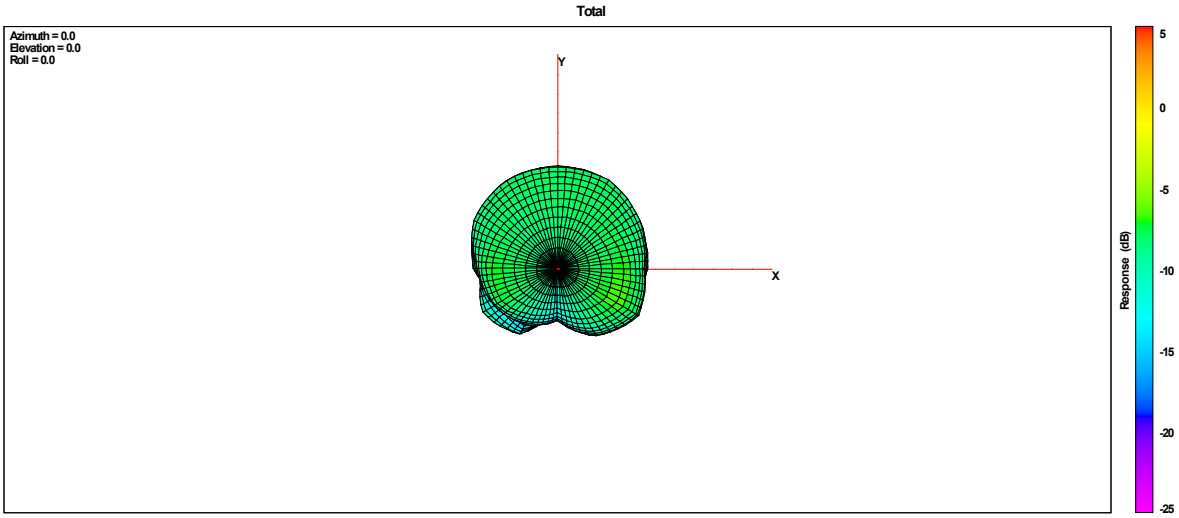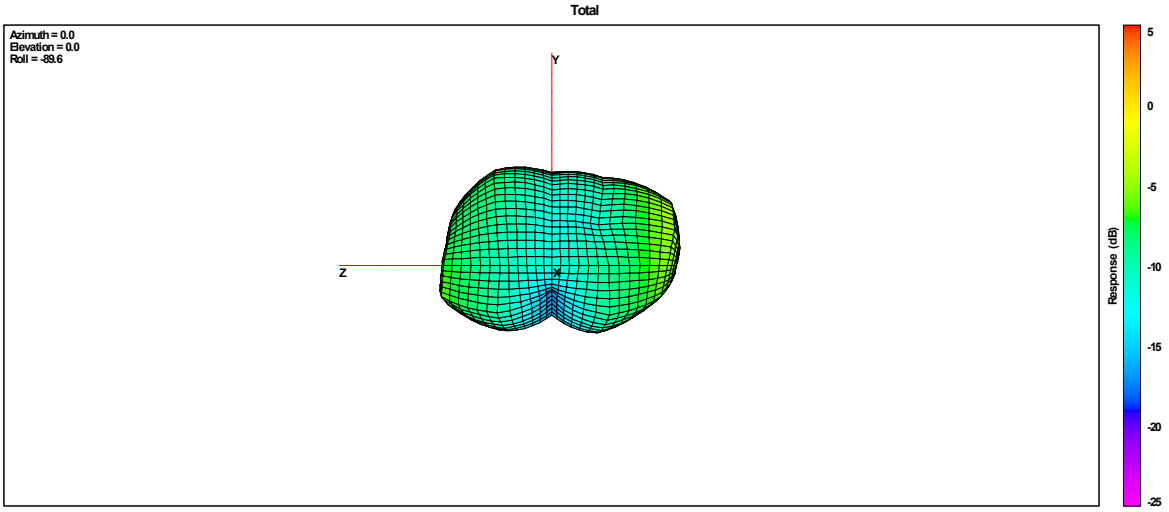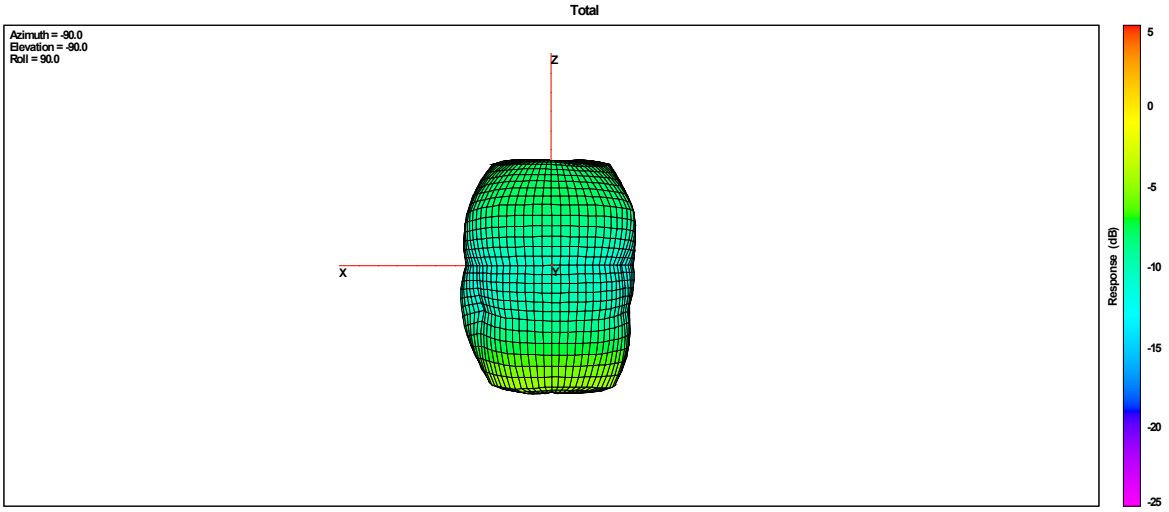
2440 MHz