Stick Logger(WiFi) Quick Guide

Model:LSW-5

Notice:

Please read this manual carefully before using products and keep it in the place where O&M providers can easily find.
Due to product upgrade and other factors, the content of this manual might change from time to time. Please take actual product as standard and get latest manual from www.solarman.cn or sales. Unless otherwise agreed herein, this manual will only be used as guidance. Any statement, information or suggestion in this manual will not take any form of responsibility.
Without written permission, any content of this document (partly or entirely) cannot be extracted, copied or transmitted in any form by any company or individual.

Warning:
Please remove logger after power off.

Download APP

If you are an household user, please scan QR code below to download SOLARMAN Smart APP.
Or you can log in to https://home.solarmanpv.com

SOLARMAN Smart

1. Stick Logger Installation

Type 1

Step1:Assemble logger to the inverter communication interface as shown in the diagram.

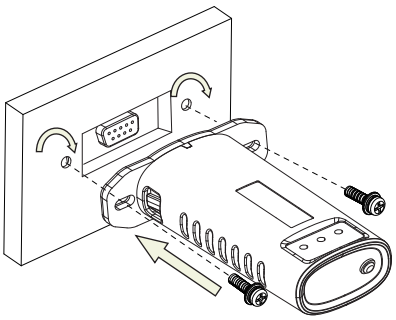

Type 2

Step1:Assemble logger to the inverter communication interface as shown in the diagram.

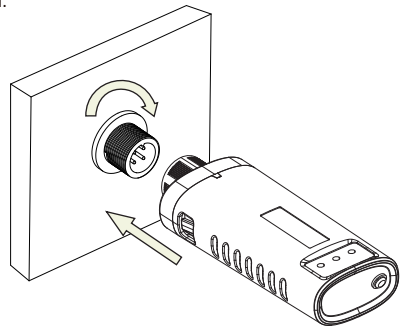

Type 3

Step1:Assemble logger to the inverter communication interface as shown in the diagram.

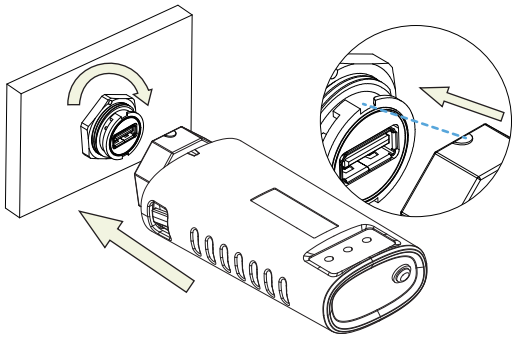

2. Logger Status

2.1 Check Indicator light

Lights	Implication	Status Description(All lights are single green lights.)
NET	Communication with router	1.Light off: Connection to the router failed. 2.On 1s/Off 1s(Slow flash): Connection to the router succeeded. 3.Light keeps on: Connection to the server succeeded. 4.On 100ms/Off 100ms(Fast flash): Distributing network fast.
COM	Communication with inverter	1.Light keeps on: Logger connected to the inverter. 2.Light off: Connection to the inverter failed. 3.On 1s/Off 1s(Slow flash): Communicating with inverter.
READY	Logger running status	1.Light off: Running abnormally. 2.On 1s/Off 1s (Slow flash): Running normally. 3.On 100ms/Off 100ms(Fast flash): Restore factory settings.

The normal operation status of the stick logger, when router connected to the network normally:

1.Connection to the server succeeded: NET light keeps on after the logger powered on.
2.Logger running normally: READY light flashes.
3.Connection to the inverter succeeded: COM light keeps on.

3. Abnormal State Processing

If the data on platform is abnormal when the stick logger is running, please check the table below and according to the status of indicator lights to complete a simple troubleshooting. If it still can not be resolved or indicator lights status do not show in the table below, please contact Customer Support.
(Note: Please using the following table query after power-on for 2mins at least.)

NET	COM	READY	Fault Description	Fault Cause	Solution
Any state	OFF	Slow flash	Communicate with inverter abnormally	1.Connection between stick logger and inverter loosen. 2.Inverter does not match with stick logger's communication rate.	1.Check the connection between stick logger and inverter. Remove the stick logger and install again. 2.Check inverter's communication rate to see if it matches with stick logger's. 3.Long press Reset button for 5s, reboot stick logger.
OFF	ON	Slow flash	Connection between logger and router abnormal	1.Stick logger does not have a network. 2.Router WiFi signal strength weak.	1.Check if the wireless network configured. 2.Enhance router WiFi signal strength.
Slow flash	ON	Slow flash	Connection between logger and router normal, connection between logger and remote server abnormal.	1.Router networking abnormal. 2.The server point of logger is modified. 3.Network limitation, server cannot be connected.	1.Check if the router has access to the network. 2.Check the router's setting, if the connection is limited. 3.Contact our customer service.
OFF	OFF	OFF	Power supply abnormal	1.Connection between stick logger and inverter loosen or abnormal. 2.Inverter power insufficient. 3.Stick Logger abnormal.	1.Check the connection, remove the stick logger and install again. 2.Check inverter output power. 3.Contact our customer service.
Fast flash	Any state	Any state	Networking status	Normal	1.Exit automatically after 2mins. 2.Long press Reset button for 5s, reboot stick logger. 3.Long press Reset button for 10s, restore factory settings.
Any state	Any state	Fast flash	Restore factory settings	Normal	1.Exit automatically after 1mins. 2.Long press Reset button for 5s, reboot stick logger. 3.Long press Reset button for 10s, restore factory settings.

Warning:
Please do not hold the logger body to rotate while install or remove the logger.

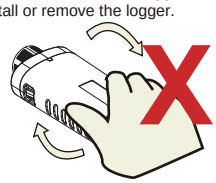

Notice:
Do not remove waterproof plug.

USER MANUAL for SOLARMAN Smart APP

Please make sure Bluetooth and WiFi are ON and the router can connect to the network normally.

1.Registration

Go to SOLARMAN Smart and register.
Click "Register" and create your account here.

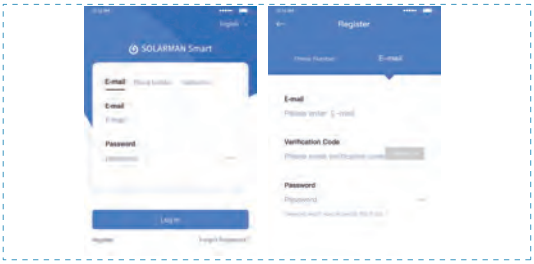

2.Create a Plant

Click "Add Now" to create your plant.
Please fill in plant basic info and other info here.

3.Add a Logger

Method 1: Enter logger SN manually.
Method 2: Click the icon in the right and scan to enter logger SN
You can find logger SN in the external packaging or on the logger body.

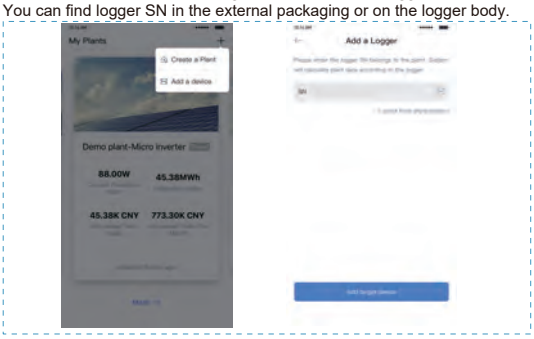

4.Network Configuration

Step 1: Click"Go to Configure"to set the network. (Please make sure Bluetooth and WiFi are ON.)

Step 2: Please wait for a few minute. Then click "Done" and view plant data.

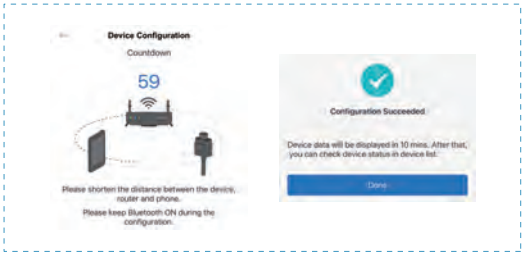

Notice:
5G WiFi is not supported .

If configuration failure occurs, please check the following reason and try it again.

(1) Make sure WLAN is ON.
(2) Make sure WiFi is normal.
(3) Make sure wireless router does not implement the white-black list.
(4) Remove the special characters in Wi-Fi network.
(5) Shorten the distance between the phone and device.
(6) Try to connect to other Wi-Fi.

Warning: Please make sure the stick logger is working properly before you leave the site. If there is anything abnormal, please do not leave the site and contact customer service at the first time.
Customer service number: 400-181-0512

If you have any technical queries about our products, please contact us and provide the following information:
1. Product model and serial number of stick logger.
2. Product model and serial number of connected inverter.
Thank you for your support and cooperation!

WARRANTY CARD

Dear Customers,

Thank you very much for using our products. In order to provide you with better service, please fill in the warranty card and reserve it carefully.

User Name		Customer Name	
Purchase Date		Customer Phone	
Product Name &Model		Product SN	
Customer Address			
Order No.			
Maintenance Records	Date	Failure Cause and Treatment	

Warranty Policy

If there is any breakdown which caused by the product's own quality, customers can send the warranty card with the product to our Customer Service Center.

Notice

1.According to the prescription, the warranty period is 5 years(From the day when you receive the product). During the warranty period, we provide free maintenance service to solve all non-artifical quality problems if the product is under normal usage circumstance. If the product exceeds the warranty period, only maintenance cost will be charged.

2.If the failure of the product is not due to quality problems(such as improper use, improper storage, unauthorized disassembly, etc.) , maintenance cost will be charged.

3.Please pay for back goods freight in advance. Freight collect is not accepted.

FCC Warning

This device complies with part 15 of the FCC rules. Operation is subject to the following two conditions: (1) this device may not cause harmful interference, and (2) this device must accept any interference received, including interference that may cause undesired operation.

Changes or modifications not expressly approved by the party responsible for compliance could void the user's authority to operate the equipment.

NOTE: This equipment has been tested and found to comply with the limits for a Class B digital device, pursuant to part 15 of the FCC Rules. These limits are designed to provide reasonable protection against harmful interference in a residential installation. This equipment generates uses and can radiate radio frequency energy and, if not installed and used in accordance with the instructions, may cause harmful interference to radio communications. However, there is no guarantee that interference will not occur in a particular installation. If this equipment does cause harmful interference to radio or television reception, which can be determined by turning the equipment off and on, the user is encouraged to try to correct the interference by one or more of the following measures:

- Reorient or relocate the receiving antenna.
- Increase the separation between the equipment and receiver.
- Connect the equipment into an outlet on a circuit different from that to which the receiver is connected.
- Consult the dealer or an experienced radio/TV technician for help.

Radiation Exposure Statement

This equipment complies with FCC radiation exposure limits set forth for an uncontrolled environment. This equipment should be installed and operated with minimum distance 20cm between the radiator and your body.