Product Specification Report

Supplier Name：		IGEN Tech Co., Ltd.
Supplier Part No.：		51-0340-004
Customer Name：		Ningbo Deye Technology Group Co., Ltd.
Customer Part No.：		30080519000003（318010038）
Product Name：		BT/WiFi Module
Product Type：		MW-4
WiFi Firmware Version：		
WEB Version：		
Inverter Type：		
Inverter Protocol：		
Effective Date：		
Customer Approval		Supplier Approval
Confirmed By	Approved By	

Current	Note	Updated Time	Updated By
1.0	First Draft (General scenario for Deye)	2021.12.03	

Introduction

By collecting operating data and power generation of inverter, Module can run a long-term and efficientmonitoring of PV system. Module can connect to single inverter via Uart TTL interface, which enables to collectall the data of PV system from the inverter. Meanwhile, remote monitoring cloud platform (SOLARMAN Portal)provides powerful data support for the logger. Module sends the data to the monitoring platform via WiFi. The real-time status and historical data can be displayed with graphs, enabling intuitive and clear understanding of PV system.
Furthermore, customized alerts can notify users of any malfunction or defect immediately via SMS and E-mail, which realizes the management of PV system at anytime and anywhere, also simplifies the maintenance significantly.

Product Parameter

Wireless Parameter	
Certification	FCC/CE/RoHS
WiFi Standard	802.11b/g/n
WiFi Frequency	2.412GHz-2.462GHz
WiFi Transmitting Power	802.11b: +15.0dBm (@11Mbps)
	802.11g: +15.0dBm (@54Mbps)
	802.11n: +13.0dBm@HT20, MCS7)
WiFi Sensitivity	802.11b: -98dBm (@1Mbps)
	802.11b: -91dBm (@11Mbps)
	802.11g: -93dBm (@6Mbps)
	802.11g: -77dBm (@54Mbps)
	802.11n: -93dBm (@MCS0)
	802.11n: -73dBm (@MCS7)
BLE Standard	BLE5.0
BLE Frequency	2.402GHz-2.480GHz
BLE Transmitting Power	Max 2.0dBm
BLE Sensitivity	-97 dBm
Antenna Option	■ External：I-PEX connector ○ Embedded：3.0dBi Onboard antenna
Hardware Parameter	
Data Interface	UART TTL（3.3V）
Working Voltage	3.0~3.6V
Working Current	Peak(100 ms/ 1ms)：<350mA Avg(STA, Networking standby)：45mA Avg(STA, 1KB/s)：60mA Avg(AP)：70mA Standby: 310uA（Reset Pin-down）
Button	RESET

	nReload
Flash	8MByte
Hardware Watchdog	Supported（Onboard）
Working Temperature	-40℃-+85℃
Storage Temperature	-45℃-+95℃
Storage Humidity	< 80% RH
Size	41.50*25mm *1.2mm (±0.2mm)
Software Parameter	
Wireless Network Type	STA/AP
Security Mechanism	WEP/WPA-PSK/WPA2-PSK/WPA3-SAE
Encryption Type	WEP64/WEP128/TKIP/AES
Firmware Upgrade	Local wireless/Remote upgrade
Network Protocol	IPv4,TCP/UDP/HTTP/TLS 1.2
Configuration	AT+Instruction set, Web page
	SmartBLELink BLE Networking
	Android/iOS

Pin Definition

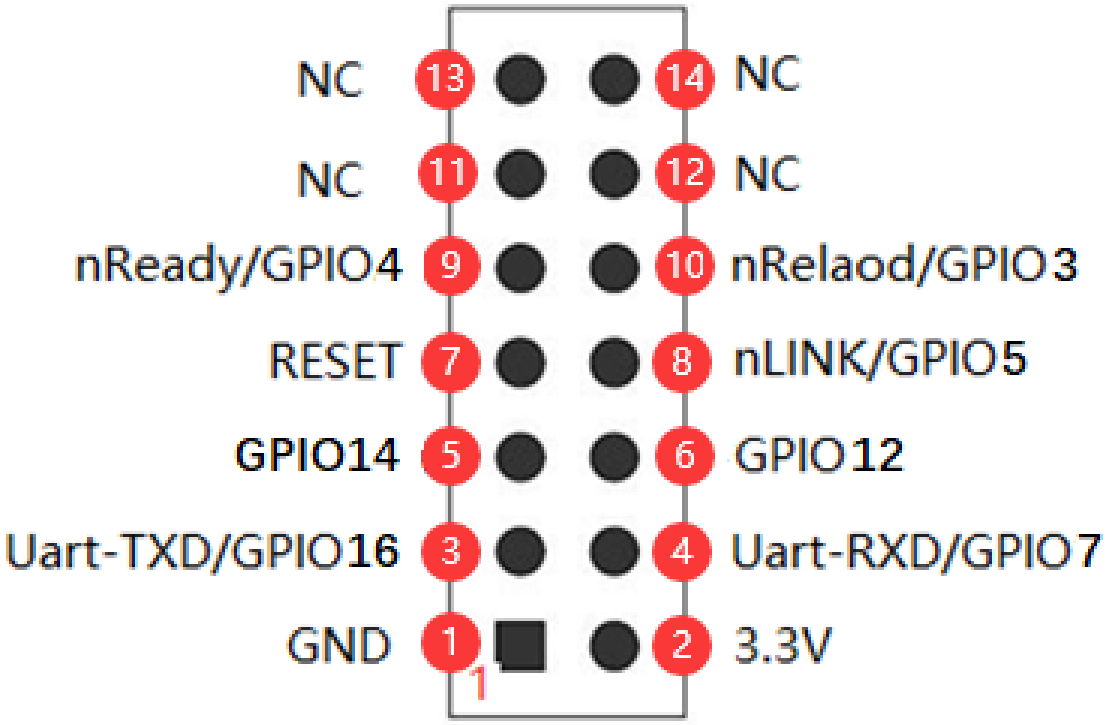

Pin	Description	Network	Type	Details
1	GND	GND	Power	Ground
2	VCC 3.3V	3.3V	Power	Recommended power range: 3.3V±5%
3	UART sending&receiving data	UART-TXD	0	3.3V com serial 0 output, GPIO16 available
4	UART sending&receiving data	UART-RXD	I	3.3V com serial 0 input, GPIO7 available
5	GPIO14	GPIO14	IPU/O	GPIO14 (suspended when not using, DAC/ADC available)
6	GPIO12	GPIO12	I/O	GPIO12 (suspended when not using, PWM2/ADC available)
7	Reset	RESET	I，PU	Low level reset, reset time >300ms. Low effective hardware reset input pin contains reset circuit. Resistance cannot be pulled in case the abnormal situation occurs.
8	WiFi Status	nLink	IPU/O	Wi-Fi connected, output “0”m or output “1”. GPIO5, PWM5 available Power：44K; When using PWM function, additional 1K resistance is required.
9	Startup Status	nReady	O	“0” – start; “1” – fail; suspended when not using; GPIO4, PWM4 available
10	Restore factory setting	nReload	IPU	Input low level “0”>3s and be high; restore factory setting GPIO3, PWM3 available
11	NC	NC	Not used	
12	NC	NC		
13	NC	NC		
14	NC	NC		

Picture

	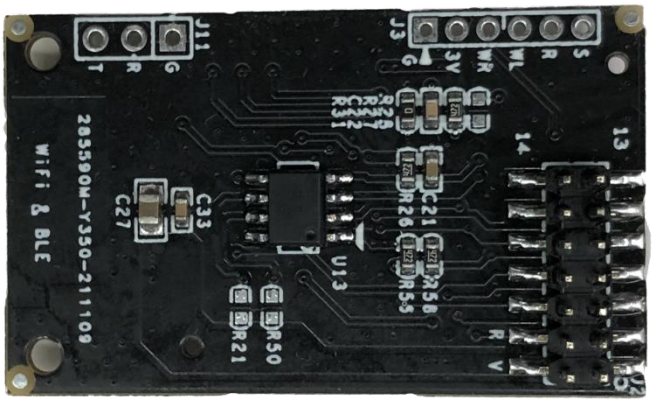
4.1Front View	4.2 Back View

Size

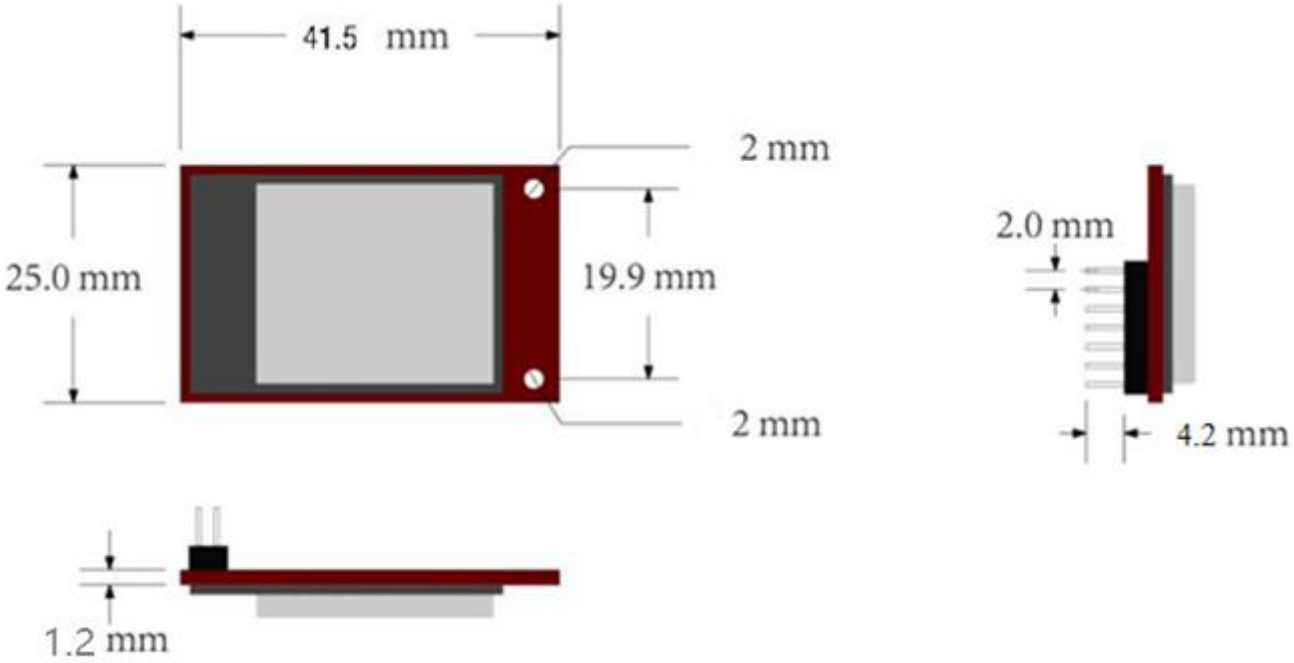

Tolerance:±0.3 (mm)

Firmware Upgrade

Direct Transmission	
Domain Name：	access1.solarmanpv.com（solarman 3.0）
IP：	47.102.152.71（solarman 3.0）
Port No.：	10000（solarman 3.0）
APN：	——

Contact

IGEN Tech Co., Ltd.
Add: Block F4, China IoT International Innovation Park, No. 200, Linghu Avenue, Wuxi, Jiangsu, P. R. China
Tel: +86-400-181-0512
Email: info@solarmanpv.com
Website: www.solarman.cn

FCC Statement

This device complies with part 15 of the FCC rules. Operation is subject to the following two conditions:
(1) this device may not cause harmful interference, and (2) this device must accept any interference received, incl uding interference that may cause undesired operation.
Changes or modifications not expressly approved by the party responsible for compliance could void the user' s authority to operate the equipment.
NOTE: This equipment has been tested and found to comply with the limits for a Class B digital device, pursua nt to part 15 of the FCC Rules. These limits are designed to provide reasonable protection against harmful inte rference in a residential installation. This equipment generates uses and can radiate radio frequency energy a nd, if not installed and used in accordance with the instructions, may cause harmful interference to radio com munications. However, there is no guarantee that interference will not occur in a particular installation. If this equipment does cause harmful interference to radio or television reception, which can be determined by turn ing the equipment off and on, the user is encouraged to try to correct the interference by one or more of the following measures:

- Reorient or relocate the receiving antenna.
- Increase the separation between the equipment and receiver.
- Connect the equipment into an outlet on a circuit different from that to which the receiver is connected.
- Consult the dealer or an experienced radio/TV technician for help important announcement

Important Note:

Radiation Exposure Statement

This equipment complies with FCC radiation exposure limits set forth for an uncontrolled environment. This equipment should be installed and operated with minimum distance 20cm between the radiator and your body.
This transmitter must not be co-located or operating in conjunction with any other antenna or transmitter.
Country Code selection feature to be disabled for products marketed to the US/Canada.
This device is intended only for OEM integrators under the following conditions:

1. The antenna must be installed such that 20 cm is maintained between the antenna and users, and
2. The transmitter module may not be co-located with any other transmitter or antenna,
3. For all products market in US, OEM has to limit the operation channels in CH1 to CH11 for 2.4G band by supplied firmware programming tool. OEM shall not supply any tool or info to the end-user regarding to Regulatory Domain change. (if modular only test Channel 1-11)

As long as the three conditions above are met, further transmitter testing will not be required. However, the OEM integrator is still responsible for testing their end-product for any additional compliance requirements required with this module installed.

Important Note:

In the event that these conditions cannot be met (for example certain laptop configurations or co-location with another transmitter), then the FCC authorization is no longer considered valid and the FCC ID cannot be used on the final product. In these circumstances, the OEM integrator will be responsible for re-evaluating the end product (including the transmitter) and obtaining a separate FCC authorization.

End Product Labeling

The final end product must be labeled in a visible area with the following" Contains FCC ID: **2A4FRMW-4**"

Manual Information to the End User

The OEM integrator has to be aware not to provide information to the end user regarding how to install or remove this RF module in the user's manual of the end product which integrates this module.
The end user manual shall include all required regulatory information/warning as show in this manual.

Integration instructions for host product manufacturers according to KDB 996369 D03 OEM Manual v01

2.2 List of applicable FCC rules

CFR 47 FCC PART 15 SUBPART C has been investigated. It is applicable to the modular transmitter

2.3 Specific operational use conditions

This module is stand-alone modular. If the end product will involve the Multiple simultaneously transmitting condition or different operational conditions for a stand-alone modular transmitter in a host, host manufacturer have to consult with module manufacturer for the installation method in end system.

2.4 Limited module procedures

Not applicable

2.5 Trace antenna designs

Not applicable

2.6 RF exposure considerations

This equipment complies with FCC radiation exposure limits set forth for an uncontrolled environment. This equipment should be installed and operated with minimum distance 20cm between the radiator & your body.

2.7 Antennas

This radio transmitter **FCC ID: 2A4FRMW-4** has been approved by Federal Communications Commission to operate with the antenna types listed below, with the maximum permissible gain indicated. Antenna types not included in this list that have a gain greater than the maximum gain indicated for any type listed are strictly prohibited for use with this device.

Antenna No.	Model No. of antenna:	Type of antenna:	Gain of the antenna (Max.)	Frequency range:
BLE/2.4GWiFi	/	External Antenna	3.0dBi for 2400-2500MHz;	

2.8 Label and compliance information

The final end product must be labeled in a visible area with the following" Contains **FCC ID: 2A4FRMW-4**".

2.9 Information on test modes and additional testing requirements

Host manufacturer is strongly recommended to confirm compliance with FCC requirements for the transmitter when the module is installed in the host.

2.10 Additional testing, Part 15 Subpart B disclaimer

Host manufacturer is responsible for compliance of the host system with module installed with all other applicable requirements for the system such as Part 15 B.

Product List

No.	Name	Quantity	Note
1	BT/WiFi Module	1	--