INSTALLATION INSTRUCTIONS
LJD003NFSMXX-4PK*

PLEASE READ CAREFULLY BEFORE INSTALLING FIXTURE
Save these instructions, as you may need them at a later date.

Thank you for purchasing CloudyBay Smart LED Lighting Fixtures.

Cloudy Bay®

LED RGBCW TUNABLE RECESSED GIMBAL NARROW FLOOD LIGHT

DAMP LOCATION · Intertek · IC rated

GENERAL: All electrical connections must be in accordance with local and National Electrical Code (N.E.C.) standards. If you are unfamiliar with proper electrical wiring connections, contact and obtain the services of a qualified electrician. Use UL or IEC approved wire only for input/output connections.

Remove fixture and mounting components from the box, and make sure that no parts are missing, by referencing the illustration in the illustration instructions.

* XX= WH, ORB or Other Finish Color

Turn power off before installation, inspection, or removal.
Use all necessary precautions while performing this procedure.

Consult a qualified electrician to ensure correct branch circuit conductor. Min 90°C supply conductors.

Properly ground electrical enclosure. IT IS IMPERATIVE THAT THE OUTLET BOX BE PROPERLY GROUNDED.

DO NOT REVERSE THE HOT AND NEUTRAL CONNECTIONS, OTHERWISE SAFETY WILL BE COMPROMISED.

Never Cover Control box with metal box or concrete box,which will prevent it from receiving signal.

This Integrated LED Fixture has no lamp/bulb to replace.

Contact us through: smart@cloudybaylighting.com

PRODUCT CARE
After Sales Service

1.Please discontinue to use product right away if product shows any visible defect and contact customer service.

2.If there is any problem with our lights for non-human reasons, please contact customer service, we will send you brand new replacement without need to returning goods or full refund.

3.If you are not completely satisfied with product after installation but prefer not to disassemble, contact with us right away, we will provide comparable compensations.

CLEANING AND MAINTENANCE:

CAUTION: Ensure fixture temperature is cool enough to touch.
DO NOT clean or perform maintenance while fixture is energized.
- Clean lens and fixture with non-abrasive cleaning solution.
- Do not open fixture to clean LED. Do not touch the LED.
- Do not spray liquid directly on to LED, LED driver or wiring.

3-Year Limited Warranty

LIMITED WARRANTY: This fixture is warranted to be free from defects in workmanship and material for up to 3-years. Based upon reasonable household usage, when used in accordance with package and included instructions. If this fixture does not last for the time period guaranteed, manufacture will send you a replacement fixture upon receipt of the returned fixture, register receipt, and proof of purchase. To contact us, please email us at ***smart@cloudybaylighting.com*** to find out how to return the fixture. We are committed to making high quality products. Returning the fixture will help us monitor and further improve product quality. This replacement is the sole remedy available, and LIABILITY FOR INCIDENTAL OR CONSEQUENTIAL DAMAGES IS HEREBY EXPRESSLY EXCLUDED

PACKAGE CONTENTS

A

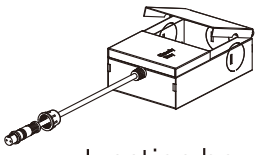

X4

Junction box

B

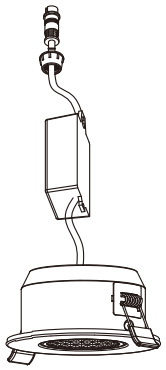

X4

Light kit integrated with control box

C

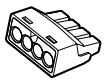

X12

4 Port Quick Connectors

D

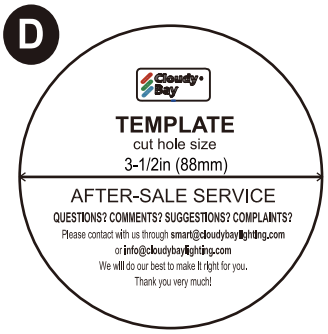

E

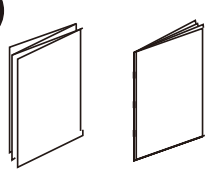

USER MANUAL & VOICE CONTROL GUIDE

⚠:If you only have a dimmer at hand, set it to highest level only. If light performance is not good, we strongly advise you to change it to a regular switch.

FCC Warning
This device complies with part 15 of the FCC Rules. Operation is subject to the following two conditions: (1) This device may not cause harmful interference, and (2) this device must accept any interference received,including interference that may cause undesired operation.
Any changes or modifications not expressly approved by the party responsible for compliance could void the user's authority to operate the equipment.
NOTE: This equipment has been tested and found to comply with the limits for a Class B digital device, pursuant to Part 15 of the FCC Rules. These limits are designed to provide reasonable protection against harmful interference in a residential installation. This equipment generates, uses and can radiate radio frequency energy and, if not installed and used in accordance with the instructions, may cause harmful interference to radio communications. However, there is no guarantee that interference will not occur in a particular installation.
If this equipment does cause harmful interference to radio or television reception, which can be determined by turning the equipment off and on, the user is encouraged to try to correct the interference by one or more of the following measures:
-- Reorient or relocate the receiving antenna.
-- Increase the separation between the equipment and receiver.
-- Connect the equipment into an outlet on a circuit different from that to which the receiver is connected.
-- Consult the dealer or an experienced radio/TV technician for help.
This equipment complies with FCC radiation exposure limits set forth for an uncontrolled environment. This equipment should be installed and operated with minimum distance 20cm between the radiator and your body.

Cloudy Bay®

INSTALLATION INSTRUCTIONS

PLEASE READ CAREFULLY BEFORE INSTALLING FIXTURE
Save these instructions, as you may need them at a later date.

INSTALLATION OVERVIEW

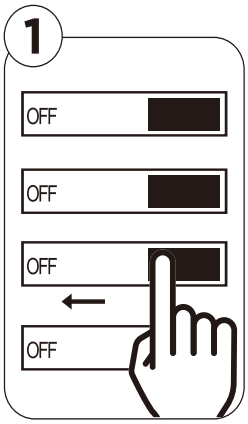

1. Turn off power at the source.

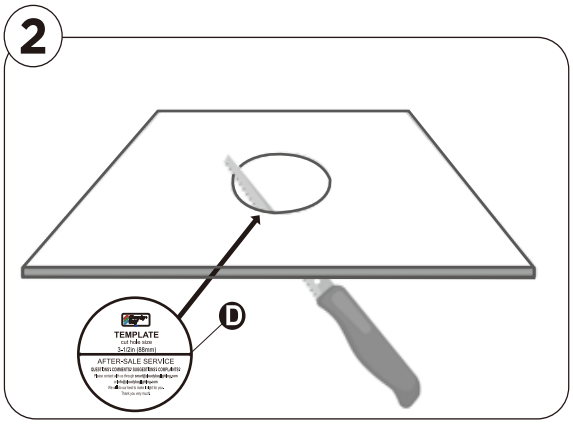

2. Make a hole in the ceiling with template in package

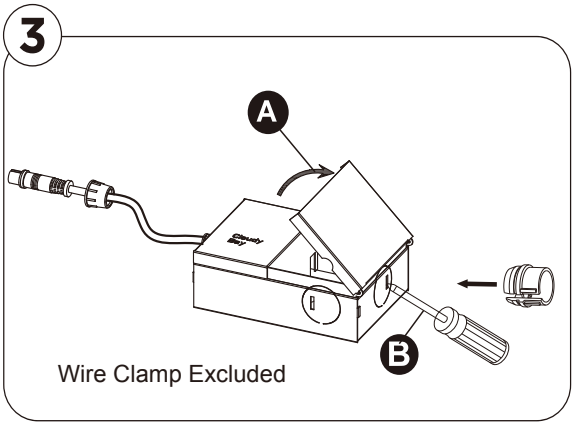

3. Carefully remove the knock-out with a screw driver or punch.

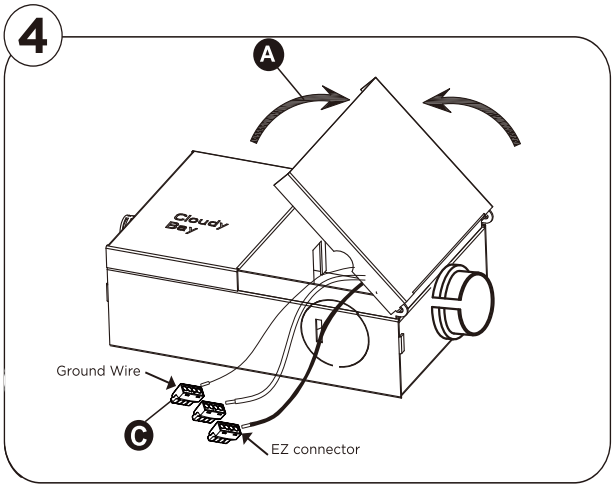

4. Open the connectors box cover. Feed supply wire into knockout hole using connector and make all connections inside the junction box using the EZ connectors (see picture below). Connect the 120V line wire to the black wire. Connect the neutral wire to the white wire. Connect ground wire with bare cooper wire. Put on junction box cover.

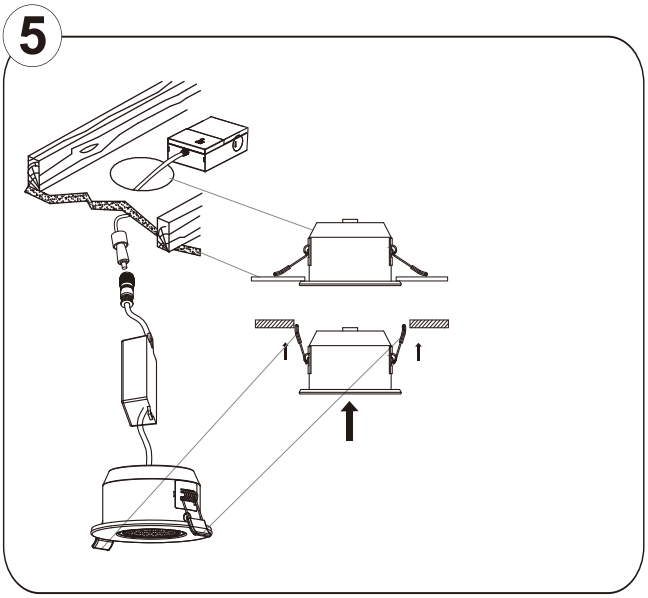

5. Connect male and female cable, raise spring evenly and push light kit into ceiling hole.

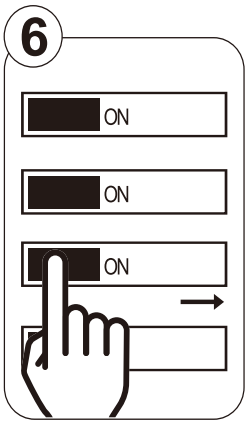

6. Restore power.

7. Follow User Manual and Voice Guidline to set up product properly. Please contact with us first if you have any question on using our products.

QUESTIONS? COMMENTS? SUGGESTIONS? COMPLAINTS?
Please contact with us through
Toll-Free Phone Number: (1) 877-870-5171
smart@cloudybaylighting.com
or **info@cloudybaylighting.com**
We will do our best to make it right for you. Thank you very much!

Cloudy Bay®