INSTALLATION INSTRUCTIONS
LSF610SMWH

PLEASE READ CAREFULLY BEFORE INSTALLING FIXTURE
Save these instructions, as you may need them at a later date.

Thank you for purchasing CloudyBay Smart LED Lighting Fixtues.

Cloudy Bay®

6 INCH WI-FI MOTION SENSOR SURFACE MOUNT LIGHT

DAMP LOCATION · PIR SENSOR · FC

GENERAL: All electrical connections must be in accordance with local and National Electrical Code (N.E.C.) standards. If you are unfamiliar with proper electrical wiring connections, contact and obtain the services of a qualified electrician. Use UL or IEC approved wire only for input/output connections.

Remove fixture and mounting components from the box, and make sure that no parts are missing, by referencing the illustration in the illustration instructions.

Turn power off before installation, inspection, or removal.
Use all necessary precautions while performing this procedure.

Consult a qualified electrician to ensure correct branch circuit conductor. Min 90°C supply conductors.

Properly ground electrical enclosure. IT IS IMPERATIVE THAT THE OUTLET BOX BE PROPERLY GROUNDED.

DO NOT REVERSE THE HOT AND NEUTRAL CONNECTIONS, OTHERWISE SAFETY WILL BE COMPROMISED.

This Integrated LED Fixture has no lamp/bulb to replace.

THIS IS A WIFI -ENABLED MOTION SENSOR LIGHT , MAKE SURE THAT IT IS INSTALLED IN A LOCATION WITH STRONG AND STABLE WIFI SIGNAL.

PRODUCT CARE
After Sales Service

1.Please discontinue to use product right away if product shows any visible defect and contact customer service.

2.If there is any problem with our lights for non-human reasons, please contact customer service, we will send you brand new replacement without need to returning goods or full refund.

3.If you are not completely satisfied with product after installation but prefer not to disassemble, contact with us right away, we will provide comparable compensations.

3-Year Limited Warranty

LIMITED WARRANTY: This fixture is warranted to be free from defects in workmanship and material for up to 3-years. Based upon reasonable household usage, when used in accordance with package and included instructions. If this fixture does not last for the time period guaranteed, manufacture will send you a replacement fixture upon receipt of the returned fixture, register receipt, and proof of purchase. To contact us, please email us at **smart@cloudybaylighting.com** to find out how to return the fixture. We are committed to making high quality products. Returning the fixture will help us monitor and further improve product quality. This replacement is the sole remedy available, and LIABILITY FOR INCIDENTAL OR CONSEQUENTIAL DAMAGES IS HEREBY EXPRESSLY EXCLUDED.

Figure 1 2-3/4 or 3-1/2 inch Inch Junction Box Installation

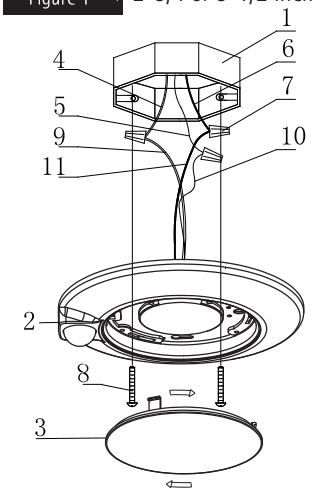

1.OUTLET BOX (EXCLUDED)
2. FIXTURE PAN
3. LENS
4. WHITE SUPPLY WIRE
5. BLACK SUPPLY WIRE
6. HOUSE GROUND WIRE
7. WIRE NUTS
8. #8-32 FIXTURE SCREWS
9. WHITE FIXTURE WIRE
10. BLACK FIXTURE WIRE
11. FIXTURE GROUND WIRE

Please follow these steps for installation.

1. SHUT OFF MAIN ELECTRICAL SUPPLY FROM THE MAIN FUSE BOX/CIRCUIT BREAKER!
2. Remove contents from box. Ensure that no parts are missing. Reference the illustration included with this instruction manual.
3. thread the FIXTURE SCREWS(8) into the appropriate threaded holes of OUTLET BOX (refer to Figure one)
4. Make the following wire connections (Fig. 1, using the provided WIRE NUTS(7):
WHITE (-) SUPPLY WIRE (4) TO WHITE FIXTURE WIRE (9)
BLACK (+) SUPPLY WIRE (5) TO BLACK FIXTURE WIRE (10)
SUPPLY GROUND WIRE (6) TO FIXTURE GROUND WIRE (11)
If necessary, wrap all wire connections in electrical tape to ensure a secure connection.
5. Carefully tuck all wiring back into the OUTLET BOX(1).
6.Align the FIXTURE PAN(2) over the OUTLET BOX and feed the FIXTURE SCREWS(8) through the keyhole slots
7.Rotate the FIXTURE PAN(2) clockwise until FIXTURE SCREWS(8) slide into the narrow end of the keyhole slots,then tighten it firmly
8. Attach the LENS(3) by rotating clockwise to secure in place.
9. Restore power at fuse box/circuit breaker. Check operation of Integrated LED Fixture.
10. Installation is completed, follow User Manual to set up light.

FCC Warning
This device complies with part 15 of the FCC Rules. Operation is subject to the following two conditions: (1) This device may not cause harmful interference, and (2) this device must accept any interference received,including interference that may cause undesired operation.
Any changes or modifications not expressly approved by the party responsible for compliance could void the user's authority to operate the equipment.
NOTE: This equipment has been tested and found to comply with the limits for a Class B digital device, pursuant to Part 15 of the FCC Rules. These limits are designed to provide reasonable protection against harmful interference in a residential installation. This equipment generates, uses and can radiate radio frequency energy and, if not installed and used in accordance with the instructions, may cause harmful interference to radio communications. However, there is no guarantee that interference will not occur in a particular installation.
If this equipment does cause harmful interference to radio or television reception, which can be determined by turning the equipment off and on, the user is encouraged to try to correct the interference by one or more of the following measures:
-- Reorient or relocate the receiving antenna.
-- Increase the separation between the equipment and receiver.
-- Connect the equipment into an outlet on a circuit different from that to which the receiver is connected.
-- Consult the dealer or an experienced radio/TV technician for help.
This equipment complies with FCC radiation exposure limits set forth for an uncontrolled environment. This equipment should be installed and operated with minimum distance 20cm between the radiator and your body.

Sensor Detection Range:

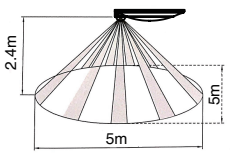

Ceiling Mount sensor Detection Range

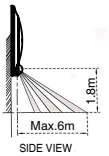

Wall Mount sensor Detection Range

QUESTIONS? COMMENTS?
SUGGESTIONS? COMPLAINTS?
Please contact with us through
Toll-Free Phone Number: (1) 877-870-5171
smart@cloudybaylighting.com
or **info@cloudybaylighting.com**
We will do our best to make it right for you. Thank you very much!

Cloudy Bay®