ELECTROMAGNETIC EMISSIONS COMPLIANCE REPORT
FCC PART 15 SUBPART C REQUIREMENT

OF

Remote controller

Model No.: KZQY24J

Trademark: Nicoko

FCC ID: 2A4GGKZQY24J

Report No.:E01A22020046F00201

Issue Date: Feb. 21, 2022

Prepared for

Shenzhen Huacai Lijing Electronic Technology Co. Ltd

Building 1105 Room, BiXin Road Longyuanyinxiang garden, Longchengjiedao, Longgang district, Shenzhen, China

Prepared by

Dong Guan Anci Electronic Technology Co., Ltd.

1-2 Floor, Building A, No.11, Headquarters 2 Road, Songshan, Lake Hi-tech Industrial Development Zone, Dongguan City, Guangdong Pr., China.

This report shall not be reproduced, except in full, without the written approval of Dong Guan Anci Electronic Technology Co., Ltd.

VERIFICATION OF COMPLIANCE

Applicant:	Shenzhen Huacai Lijing Electronic Technology Co. Ltd Building 1105 Room, BiXin Road Longyuanyinxiang garden, Longchengjiedao, Longgang district, Shenzhen, China
Manufacturer:	Shenzhen Huacai Lijing Electronic Technology Co. Ltd Building 1105 Room, BiXin Road Longyuanyinxiang garden, Longchengjiedao, Longgang district, Shenzhen, China
Product Description:	Remote controller
Trade Mark:	Nicoko
Model Number:	KZQY24J

We hereby certify that:

The above equipment was tested by Dong Guan Anci Electronic Technology Co., Ltd. The test data, data evaluation, test procedures, and equipment configurations shown in this report were made in accordance with the procedures given in ANSI C63.10-2013 and the energy emitted by the sample EUT tested as described in this report is in compliance with conducted and radiated emission limits of FCC Rules Part 15.231(2021).

Date of Test : Feb. 14, 2022 to Feb. 19, 2022

Prepared by : Tomas Yang/Supervisor

Reviewer & Approved : Alan He/Manager

Modified Information

Version	Summary	Revision Date	Report No.
Ver.1.0	Original Report	/	E01A22020046F00201

Table of Contents

1 EUT TECHNICAL DESCRIPTION 5

2 SUMMARY OF TEST RESULT 6

3 TEST METHODOLOGY 7

3.1 GENERAL DESCRIPTION OF APPLIED STANDARDS 7

3.2 MEASUREMENT EQUIPMENT USED 7

3.3 DESCRIPTION OF TEST MODES 7

4 FACILITIES AND ACCREDITATIONS 8

4.1 FACILITIES 8

4.2 LABORATORY ACCREDITATIONS AND LISTINGS 8

5 TEST SYSTEM UNCERTAINTY 9

6 SETUP OF EQUIPMENT UNDER TEST 10

6.1 RADIO FREQUENCY TEST SETUP 1 10

6.2 RADIO FREQUENCY TEST SETUP 2 10

6.3 CONDUCTED EMISSION TEST SETUP 11

6.4 BLOCK DIAGRAM CONFIGURATION OF TEST SYSTEM 12

6.5 SUPPORT EQUIPMENT 12

7 TEST REQUIREMENTS 13

7.1 OCCUPIED BANDWIDTH 13

7.2 RADIATED SPURIOUS EMISSION 15

7.3 TRANSMISSION REQUIREMENT 24

7.4 ANTENNA APPLICATION 28

1 EUT TECHNICAL DESCRIPTION

Characteristics	Description
Device Type:	Remote controller
Modulation:	OOK
Operating Frequency Range(s):	433.95MHz
Number of Channels:	1 channel
Antenna Type :	Internal PCB antenna
Antenna Gain:	0 dBi
Power supply:	Battery 3V CR2032

Note: *for more details, please refer to the User's manual of the EUT.*

The EUT has been associated with peripherals pursuant to ANSI C63.10-2013 and configuration operated in a manner tended to maximize its emission characteristics in a typical application. Frequency range investigated: radiation (9 KHz to the 10th harmonic of the highest fundamental frequency or to 40 GHz, whichever is lower).

For Radiated: The EUT's antenna was pre-tested under the following modes:

Test Mode	Description
Mode A	**X-Y axis**
Mode B	Y-Z axis
Mode C	X-Z axis

From the above modes, the worst case was found in Mode A.
All the x/y/z orientation has been investigated, and only worst case is presented in this report.

2 SUMMARY OF TEST RESULT

FCC Part Clause	Test Parameter	Verdict	Remark
15.231(a)	Transmission Requirement	PASS	
15.231(c)	Occupied Bandwidth	PASS	
15.231(b)	Radiated Spurious Emissions	PASS	
15.231(b)	Transmission Requirement	PASS	
15.203	Antenna Requirement	PASS	
15.207(a)	Conducted Emission	N/A	See NOTE

NOTE
1: N/A (Not Applicable) ,EUT powered by battery.
2: All buttons of EUT were investigated. The test results shown in the following sections represent the worst case emissions.

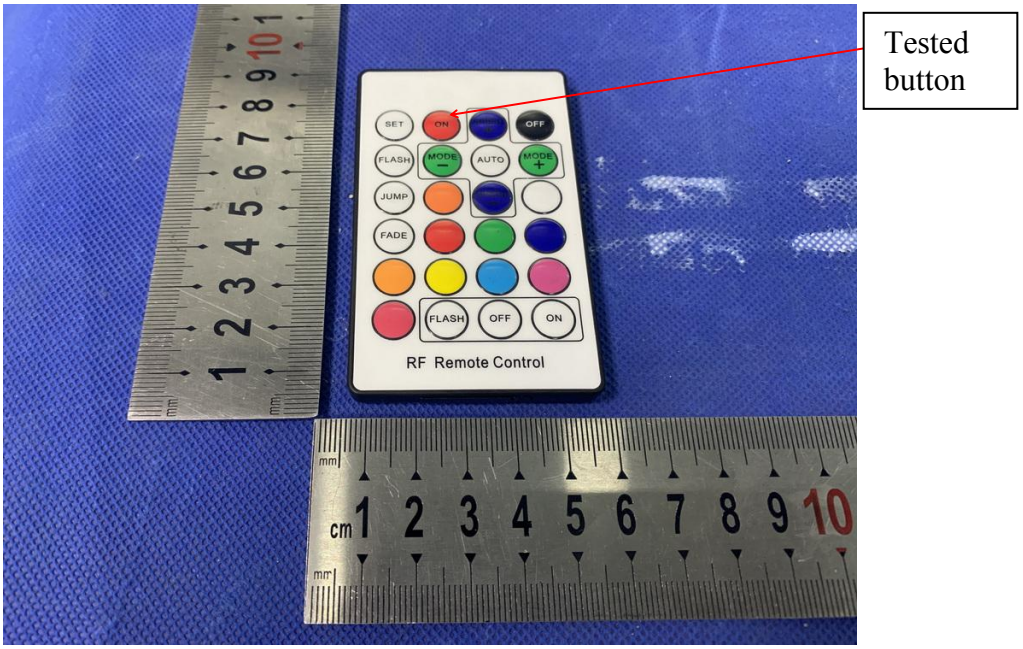

RELATED SUBMITTAL(S) / GRANT(S):

This submittal(s) (test report) is intended for FCC ID: 2A4GGKZQY24J filing to comply with Section 15.231 of the FCC Part 15, Subpart C Rules

3 TEST METHODOLOGY

3.1 GENERAL DESCRIPTION OF APPLIED STANDARDS

According to its specifications, the EUT must comply with the requirements of the following standards:
FCC 47 CFR Part 2, Subpart J
FCC 47 CFR Part 15, Subpart C

3.2 MEASUREMENT EQUIPMENT USED

Radiated Emission Test Equipent

Equipment	Manufacturer	Model No.	Serial No.	Calibrated until
EMI Test Receiver	Rohde & Schwarz	ESPI	100502	2022-11-12
Pre-Amplifier	HP	8447D	2727A06172	2022-05-22
Bilog Antenna	Schwarzbeck	VULB9163	VULB9163-588	2022-05-22
Spectrum Analyzer	Rohde & Schwarz	FSV40	US40240623	2022-11-12
Low noise Amplifiers	A-INFO	LA1018N4009	J1013130524001	2022-05-22
Horn antenna	A-INFO	LB-10180-SF	J2031090612123	2022-05-22
RF Cable	Gigalink Microwave	ZT40-2.92J-2.92J-2m	N/A	2022-11-12
RF Cable	Gigalink Microwave	ZT40-2.92J-2.92J-0.3m	N/A	2022-11-12
RF Cable	N/A	N/A	6#	2022-05-22
RF Cable	N/A	N/A	1-1#	2022-05-22

Radio Frequency Test Equient

Equipment	Manufacturer	Model No.	Serial No.	Calibrated until
Spectrum Analyzer	Rohde & Schwarz	FSV40	US40240623	2022-11-12
RF Cable	Gigalink Microwave	ZT40-2.92J-2.92J-0.3m	RF Cable	2022-11-12
Antenna Connector	ARTHUR-YANG	2244-N1TG1	N/A	N/A

Remark: *Each piece of equipment is scheduled for calibration once a year.*

3.3 DESCRIPTION OF TEST MODES

The EUT has been tested under its typical operating condition.
The EUT configuration for testing is installed on RF field strength measurement to meet the Commissions requirement and operating in a manner which intends to maximize its emission characteristics in a continuous normal application.
The Transmitter was operated in the normal operating mode. The TX frequency was fixed which was for the purpose of the measurements.

Pre-defined engineering program for regulatory testing used to control the EUT for staying in continuous transmitting and receiving mode is programmed.

4 FACILITIES AND ACCREDITATIONS

4.1 FACILITIES

All measurement facilities used to collect the measurement data are located at
1-2 Floor, Building A, No.11, Headquarters 2 Road, Songshan, Lake Hi-tech Industrial Development Zone, Dongguan City, Guangdong Pr., China. The sites are constructed in conformance with the requirements of ANSI C63.7, ANSI C63.10 and CISPR Publication 22.

4.2 LABORATORY ACCREDITATIONS AND LISTINGS

Site Description

EMC Lab.	:	Accredited by CNAS, 2017.06.26 The certificate is valid until 2022.10.28 The Laboratory has been assessed and proved to be in compliance with CNAS-CL01:2006 (identical to ISO/IEC 17025:2005) The Certificate Registration Number is L6214. Accredited by A2LA, 2018.03.15 The Certificate Number is 4422.01.
Name of Firm	:	Dong Guan Anci Electronic Technology Co., Ltd.
Site Location	:	1-2 Floor, Building A, No.11, Headquarters 2 Road, Songshan, Lake Hi-tech Industrial Development Zone, Dongguan City, Guangdong Pr., China.

5 TEST SYSTEM UNCERTAINTY

The following measurement uncertainty levels have been estimated for tests performed on the apparatus:

Parameter	Uncertainty
Radio Frequency	±1x10^-5
Conducted Emissions Test	±2.0dB
Radiated Emission Test	±2.0dB
Occupied Bandwidth Test	±1.0dB
Temperature	±0.5℃
Humidity	±3%

Measurement Uncertainty for a level of Confidence of 95%

6 SETUP OF EQUIPMENT UNDER TEST

6.1 RADIO FREQUENCY TEST SETUP 1

The component's antenna ports(s) of the EUT are connected to the measurement instrument per an appropriate attenuator. The EUT is controlled by PC/software to emit the specified signals for the purpose of measurements.

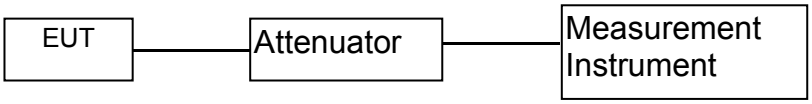

6.2 RADIO FREQUENCY TEST SETUP 2

The test site semi-anechoic chamber has met the requirement of NSA tolerance 4 dB according to the standards: ANSI C63.10. The test distance is 3m.The setup is according to the requirements in Section 13.1.4.1 of ANSI C63.10-2013 and CAN/CSA-CEI/IEC CISPR 22.

The maximal emission value is acquired by adjusting the antenna height, polarisation and turntable azimuth. Normally, the height range of antenna is 1 m to 4 m, the azimuth range of turntable is 0° to 360°, and the receive antenna has two polarizations Vertical (V) and Horizontal (H).

Below 30MHz：

The EUT is placed on a turntable 0.8 meters above the ground in the chamber, 3 meter away from the antenna (loop antenna). The Antenna should be positioned with its plane vertical at the specified distance from the EUT and rotated about its vertical axis for maximum response at each azimuth about the EUT. The center of the loop shall be 1 m above the ground. For certain applications, the loop antenna plane may also need to be positioned horizontally at the specified distance from the EUT.

Above 30MHz：

The EUT is placed on a turntable 0.8 meters above the ground in the chamber, 3 meter away from the antenna. The maximal emission value is acquired by adjusting the antenna height, polarisation and turntable azimuth. Normally, the height range of antenna is 1 m to 4 m, the azimuth range of turntable is 0° to 360°, and the receive antenna has two polarizations Vertical (V) and Horizontal (H).

(a) Radiated Emission Test Set-Up, Frequency Below 30MHz

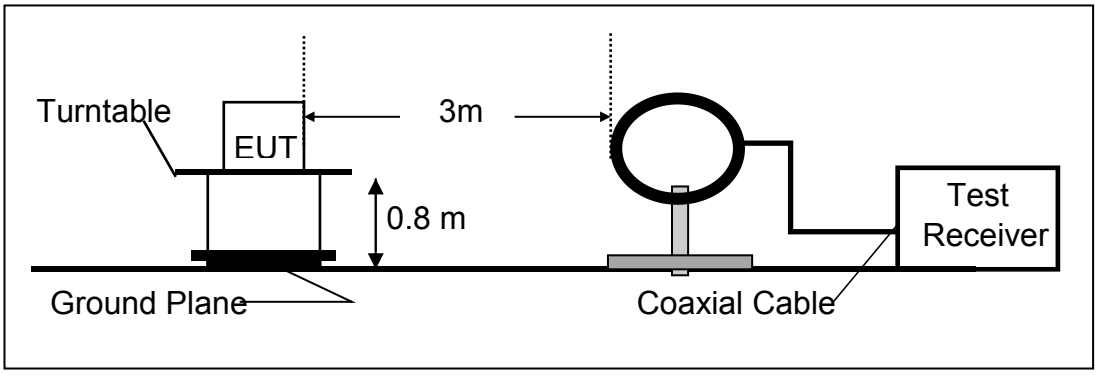

(b) Radiated Emission Test Set-Up, Frequency Below 1000MHz

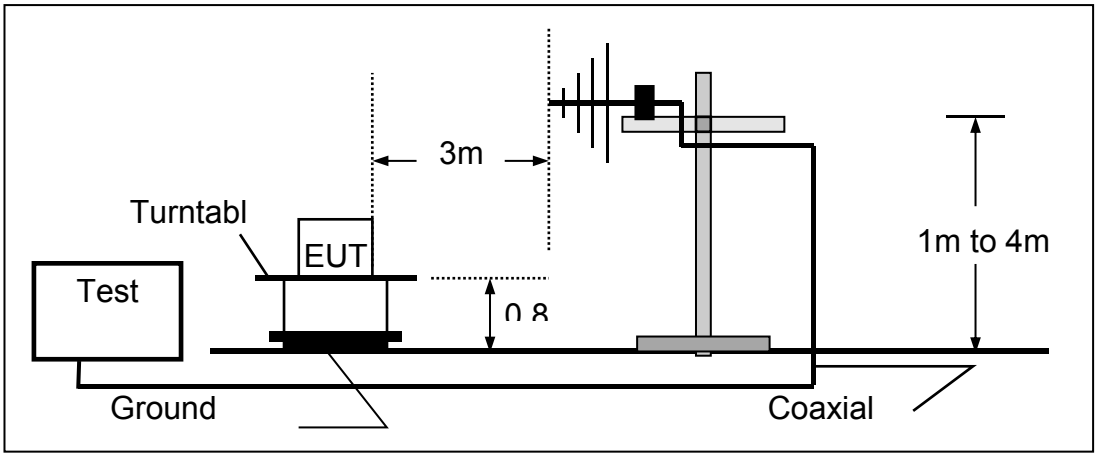

(C) Radiated Emission Test Set-Up, Frequency above 1000MHz

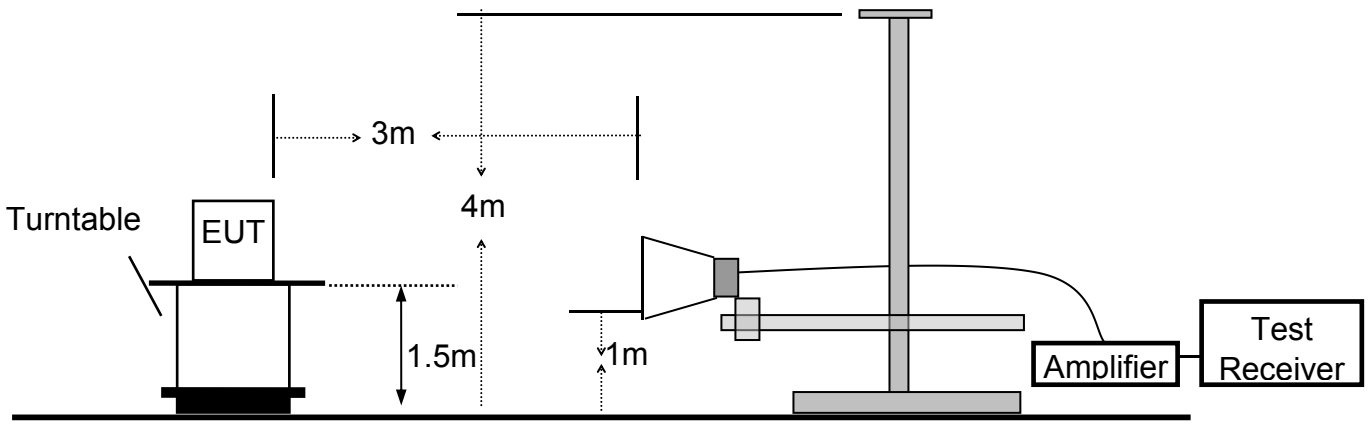

6.3 CONDUCTED EMISSION TEST SETUP

The mains cable of the EUT (maybe per AC/DC Adapter) must be connected to LISN. The LISN shall be placed 0.8 m from the boundary of EUT and bonded to a ground reference plane for LISN mounted on top of the ground reference plane. This distance is between the closest points of the LISN and the EUT. All other units of the EUT and associated equipment shall be at least 0.8m from the LISN.

Ground connections, where required for safety purposes, shall be connected to the reference ground point of the LISN and, where not otherwise provided or specified by the manufacturer, shall be of same length as the mains cable and run parallel to the mains connection at a separation distance of not more than 0.1 m.

According to the requirements in ANSI C63.10-2013 Conducted emissions from the EUT measured in the frequency range between 0.15 MHz and 30 MHz using CISPR Quasi-Peak and average detector mode.

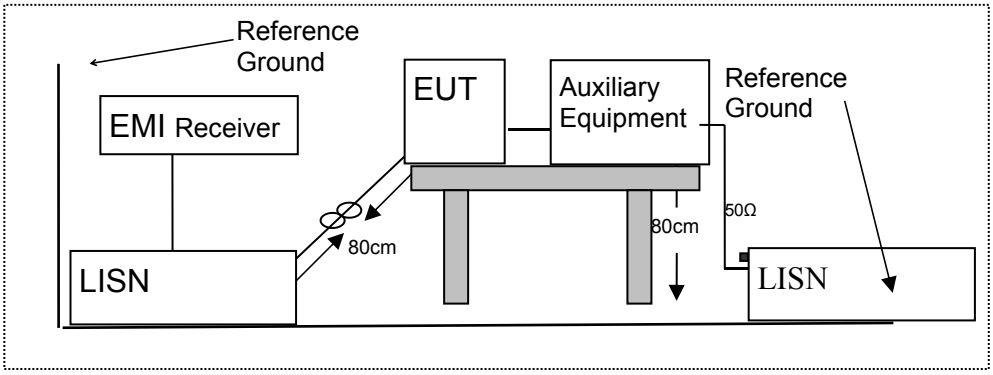

6.4 BLOCK DIAGRAM CONFIGURATION OF TEST SYSTEM

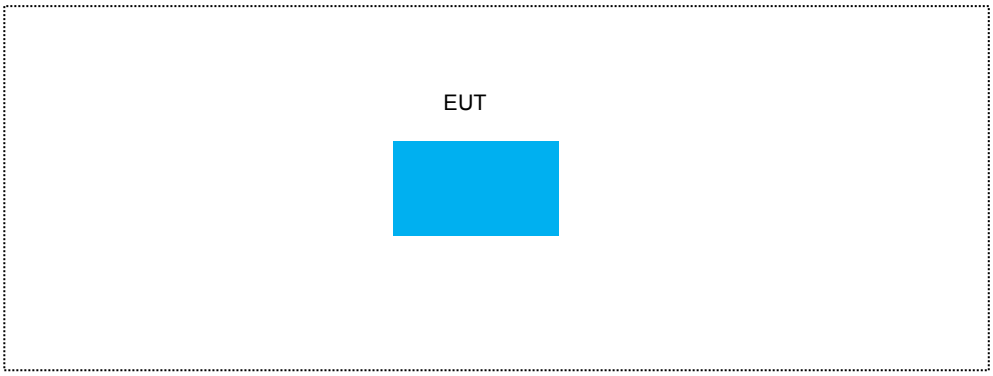

6.5 SUPPORT EQUIPMENT

Item	Equipment	Mfr/Brand	Model/Type No.	Series No.	Note
1.	N/A	N/A	N/A	N/A	

Notes:

1. *All the equipment/cables were placed in the worst-case configuration to maximize the emission during the test.*
2. *Grounding was established in accordance with the manufacturer's requirements and conditions for the intended use.*

7 TEST REQUIREMENTS

7.1 OCCUPIED BANDWIDTH

7.1.1 Applicable Standard
According to FCC Part 2.1049 and part 15.231(c)

7.1.2 Conformance Limit
The bandwidth of the emission shall be no wider than 0.25% of the center frequency for devices operating above 70 MHz and below 900 MHz. For devices operating above 900 MHz, the emission shall be no wider than 0.5% of the center frequency. Bandwidth is determined at the points 20 dB down from the modulated carrier.

7.1.3 Test Configuration
Test according to clause 6.1 radio frequency test setup 1

7.1.4 Test Procedure
The EUT was operating in transmit mode and controlled its channel. Printed out the test result from the spectrum by hard copy function.
The RF output of EUT was connected to the spectrum analyzer by RF cable and attenuator. The path loss was compensated to the results for each measurement.
Set to the maximum power setting and enable the EUT transmit continuously
Set RBW = 1% occupied bandwidth (30KHz).
Set the video bandwidth (VBW) =100KHz.
Set Span= approximately 3 to 5 times the occupied bandwidth
Set Detector = Peak.
Set Trace mode = max hold.
Set Sweep = auto couple.
The EUT should be transmitting at its maximum data rate. Allow the trace to stabilize. Use the marker-to-peak function to set the marker to the peak of the emission. Use the marker-delta function to measure 99% down one side of the emission. Reset the markerdelta function, and move the marker to the other side of the emission, until it is (as close as possible to) even with the reference marker level. The marker-delta reading at this point is the 99% bandwidth of the emission.
If this value varies with different modes of operation (e.g., data rate, modulation format, etc.), repeat this test for each variation.
Measure and record the results in the test report.

Test Results

Temperature :	28℃	Test Date :	Feb. 18, 2022
Humidity :	65 %	Test By:	Yaping Shen

Modulation Mode	Channel Number	Channel Frequency (MHz)	Measurement Bandwidth (kHz)	Limit (kHz)	Verdict
OOK	0	433.95	47.76	≤1084.9KHz	PASS
Note: N/A (Not Applicable) BW=0.25% of the center frequency					

Test Model

Occupied Bandwidth
Channel 0: 433.95MHz

OOK Modulation

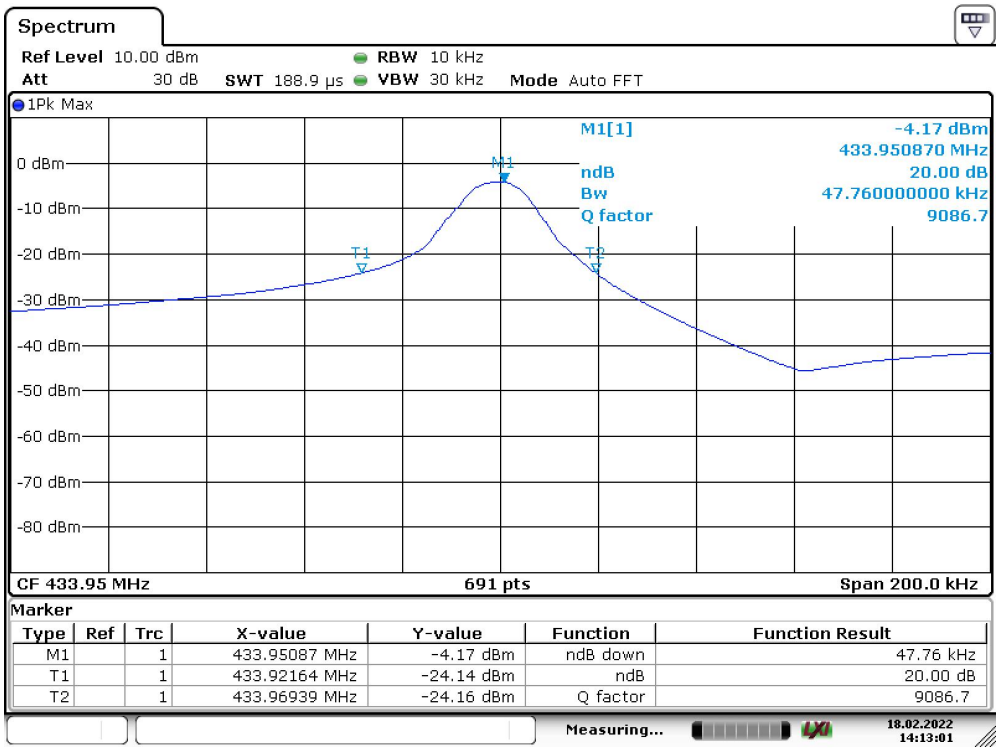

Date: 18.FEB.2022 14:13:00

7.2 RADIATED SPURIOUS EMISSION

7.2.1 Applicable Standard

According to FCC Part 15.231(b) and 15.209

7.2.2 Conformance Limit

Intentional radiators may operate at a periodic rate exceeding that specified in paragraph (a) of this section and may be employed for any type of operation, including operation prohibited in paragraph (a) of this section, provided the intentional radiator complies with the provisions of paragraphs (b) through (d) of this section, except the field strength table in paragraph (b) of this section is replaced by the following:

FCC 15.205 Restricted frequency band

MHz	MHz	MHz	GHz
0.090 - 0.110	16.42 - 16.423	399.9 - 410	4.5 - 5.15
[1]0.495 - 0.505	16.69475 - 16.69525	608 - 614	5.35 - 5.46
2.1735 - 2.1905	16.80425 - 16.80475	960 - 1240	7.25 - 7.75
4.125 - 4.128	25.5 - 25.67	1300 - 1427	8.025 - 8.5
4.17725 - 4.17775	37.5 - 38.25	1435 - 1626.5	9.0 - 9.2
4.20725 - 4.20775	73 - 74.6	1645.5 - 1646.5	9.3 - 9.5
6.215 - 6.218	74.8 - 75.2	1660 - 1710	10.6 - 12.7
6.26775 - 6.26825	108 - 121.94	1718.8 - 1722.2	13.25 - 13.4
6.31175 - 6.31225	123 - 138	2200 - 2300	14.47 - 14.5
8.291 - 8.294	149.9 - 150.05	2310 - 2390	15.35 - 16.2
8.362 - 8.366	156.52475 - 156.52525	2483.5 - 2500	17.7 - 21.4
8.37625 - 8.38675	156.7 - 156.9	2690 - 2900	22.01 - 23.12
8.41425 - 8.41475	162.0125 - 167.17	3260 - 3267	23.6 - 24.0
12.29 - 12.293	167.72 - 173.2	3332 - 3339	31.2 - 31.8
12.51975 - 12.52025	240 - 285	3345.8 - 3358	36.43 - 36.5
12.57675 - 12.57725	322 - 335.4	3600 - 4400	([2])

FCC 15.209 Limited

Frequencies (MHz)	Field Strength (micorvolts/meter)	Measurement Distance (meters)
0.009~0.490	2400/F(KHz)	300
0.490~1.705	24000/F(KHz)	30
1.705~30.0	30	30
30~88	100	3
88~216	150	3
216~960	200	3
960~1000	500	3
Above 1GHz	74 dBuV/m (PEAK) 54 dBuV/m (AVERAGE)	

15.231 Limited

Fundamental Frequency (MHz)	Field Strength of Fundamental (microvolts/meter)	Field Strength of Spurious Emissions (microvolts/meter)
40.66 - 40.70	2,250	225
70 - 130	1,250	125
130 - 174	1,250 to 3,750 **	125 to 375 **
174 - 260	3,750	375
260 - 470	3,750 to 12,500 **	375 to 1,250 **
Above 470	12,500	1,250

** linear interpolations

The field intensity in micro-volts per meter can then be determined by the following equation: FI(V/ m) = 10FI (dBV/ m) / 20 The FCC specified emission limits were calculated according the EUT operating frequency and obtained by following linear interpolation equations:

(a) For fundamental frequency:

fEUT : EUT Operating Frequency Emission Limit (V/m)

$$= [fEUT(MHz) - 260(MHz)] \times \frac{12500(V/m) - 3750(V/m)}{470(MHz) - 260(MHz)} + 3750(V/m)$$

(b) For spurious frequencies:

fEUT : EUT Operating Frequency Emission Limit (V/m)

$$= [fEUT(MHz) - 260(MHz)] \times \frac{1250(V/m) - 375(V/m)}{470(MHz) - 260(MHz)} + 375(V/m)$$

Other emissions radiated outside of the specified frequency bands, except for harmonics, shall be attenuated by at least 20 dB below the level of the fundamental or comply with the radiated emissions limits specified in section 1 5.209(a) limit in the table below has to be followed.

Note:

(1) The tighter limit applies at the band edges.

(2) Emission level (dBuV/m)=20log Emission level (uV/m).

FCC Part15 (15.231) , Subpart C		
Fundamental Frequency	Field Strength Of Fundamental	Field Strength of Spurious Emissions
433.95MHz	AV:80.82 dBuV/m at 3m distance	AV:60.82 dBuV/m at 3m distance
	PK:100.82dBuV/m at 3m distance	PK:80.82 dBuV/m at 3m distance

Calculation of Average factor

The average correction factor is computed by analyzing the on time in 100ms over one complete pulse train. Analysis of the remote transmitter on time in one complete pulse train, therefore the average value of fundamental frequency is: Average= Peak Value+20log(Duty Cycle), where the duty factor is calculated from following formula:

The duty cycle is simply the on-time divided by the period:

The duration of one cycle=0.2899*13+0.8696*12=14.2039ms

Effective period of the cycle=48.496ms

Duty Cycle=(14.2039ms)/48.496ms=0.2929

Therefore, the averaging factor is found by 20log(0.2929)=-10.67

Pulse Width(PW)=0.2899ms

2/PW=2/0.2899=6.9KHz

RBW=1MHz>2/PW(6.9KHz)

Therefore PDCF is no needed

Please see the test plot below:

pulse width:

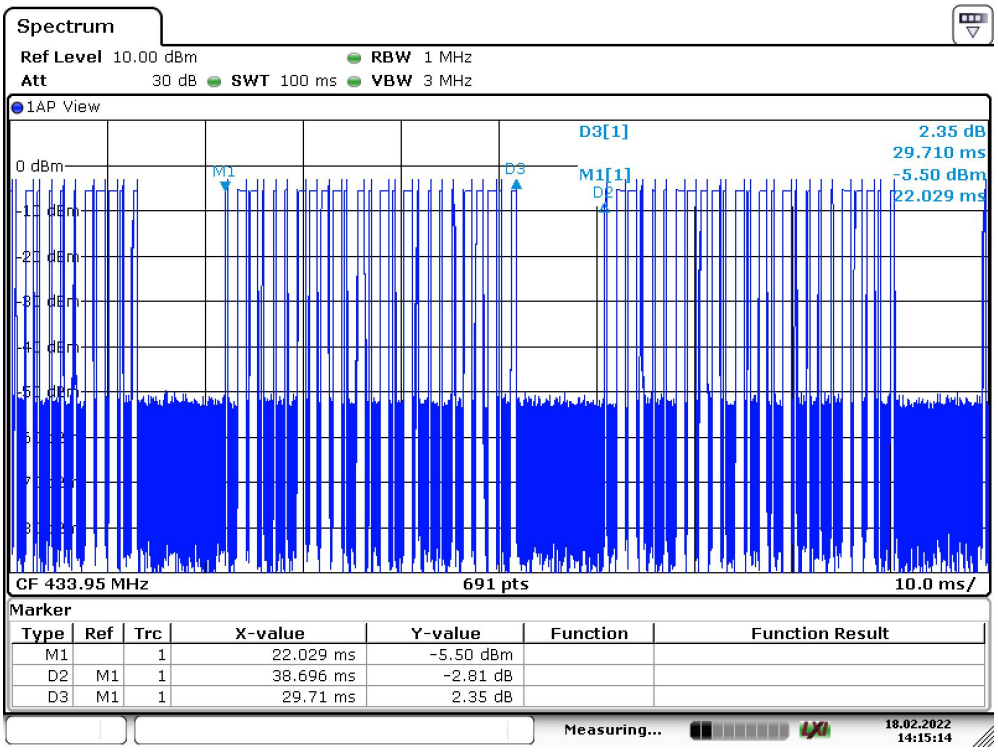

Marker						
Type	Ref	Trc	X-value	Y-value	Function	Function Result
M1		1	22.029 ms	-5.50 dBm		
D2	M1	1	38.696 ms	-2.81 dB		
D3	M1	1	29.71 ms	2.35 dB		

Date: 18.FEB.2022 14:15:14

pulse width of pulses:

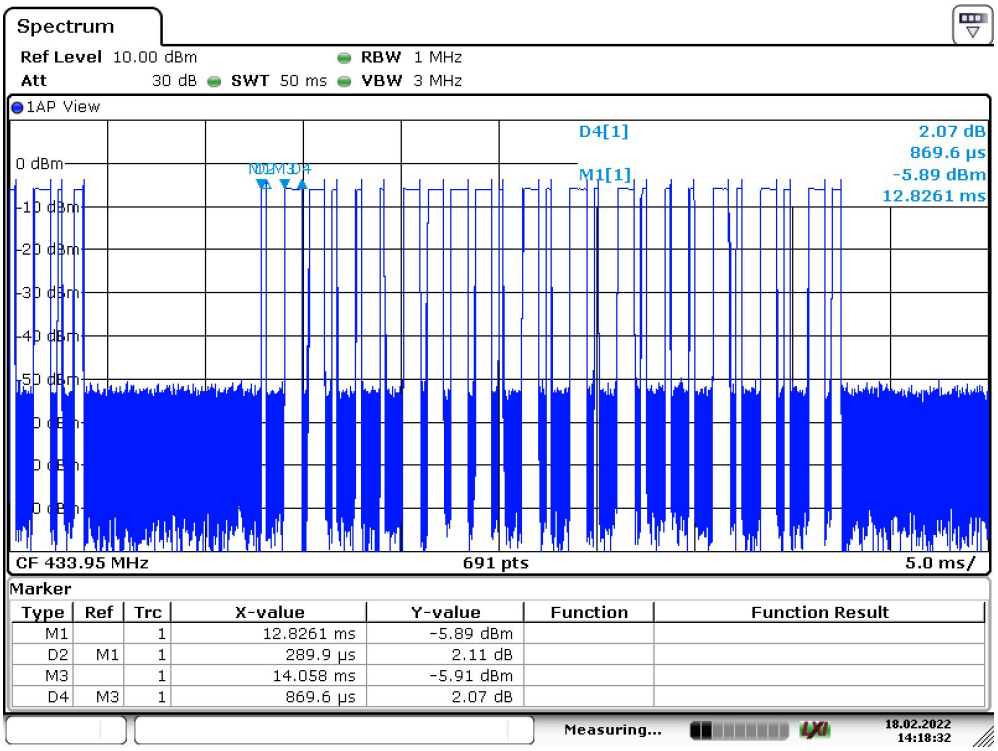

Marker						
Type	Ref	Trc	X-value	Y-value	Function	Function Result
M1		1	12.8261 ms	-5.89 dBm		
D2	M1	1	289.9 µs	2.11 dB		
M3		1	14.058 ms	-5.91 dBm		
D4	M3	1	869.6 µs	2.07 dB		

Date: 18.FEB.2022 14:18:32

7.2.3 Measurement Result

7.2.4 Spurious Emission below 30MHz (9KHz to30MHz)

Modulation:	OOK	Test Date :	Feb. 18, 2022
Frequency Range:	9KHz-30MHz	Temperature :	25 ℃
Test Result:	PASS	Humidity :	50 %
Measured Distance:	3m	Test By:	Best

Freq.	Ant. Pol.	Reading Level(dBuV/m)		Correct Factor	Emission Level(dBuV/m)		AVG Factor	Limit 3m(dBuV/m)		Margin(dB)	
(MHz)	H/V	PK	AV	dB	PK	AV	dB	PK	AV	PK	AV
-	-	-	-	-	-	-	-	-	-	-	-

Note: the amplitude of spurious emission that is attenuated by more than 20dB below the permissible limit has no need to be reported.
Distance extrapolation factor =40log(Specific distance/ test distance)(dB);
Limit line=Specific limits(dBuV) + distance extrapolation factor

7.2.5 Radiated spurious emission below 1GHz

Modulation:	OOK	Test Date :	Feb. 18, 2022
Frequency Range:	30-1000MHz	Temperature :	25 ℃
Test Result:	PASS	Humidity :	50 %
Measured Distance:	3m	Test By:	Best

Freq.	Ant. Pol.	Reading Level(dBuV/m)		Correct Factor	Emission Level(dBuV/m)		AVG Factor	Limit 3m(dBuV/m)		Margin(dB)	
(MHz)	H/V	PK	AV	dB	PK	AV	dB	PK	AV	PK	AV
434.0650(F)	H	86.28	75.61	-2.53	83.75	73.08	-10.67	100.82	80.82	-17.07	-7.74
434.0650(F)	V	85.15	74.48	-2.53	82.62	71.95	-10.67	100.82	80.82	-18.2	-8.87
869.1300	H	55.73	45.06	6.09	61.82	51.15	-10.67	80.82	60.82	-19	-9.67
869.1300	V	55.57	44.9	6.09	61.66	50.99	-10.67	80.82	60.82	-19.16	-9.83

Note: (1) All Readings are Peak Value.

(2) Correct Factor= Antenna Factor +Cable Loss- Amplifier Gain

(3) Emission Level= Reading Level+Probe Factor +Cable Loss

(4) True Value = Emission Level + Duty Cycle Correction Factor

(5) DF= Duty Cycle Correction Factor

(6) Duty Cycle Correction Factor (dB) = 20log(Duty cycle)= -10.67dB

(7) Margin = PK Level – AV limit

(8) The “*” means restricted bands

(9) All the x/y/z orientation has been investigated, and only worst case is presented in this report.

(10) The EUT has been evaluated in xyz orientation, and the worst result have been recorded in the report.

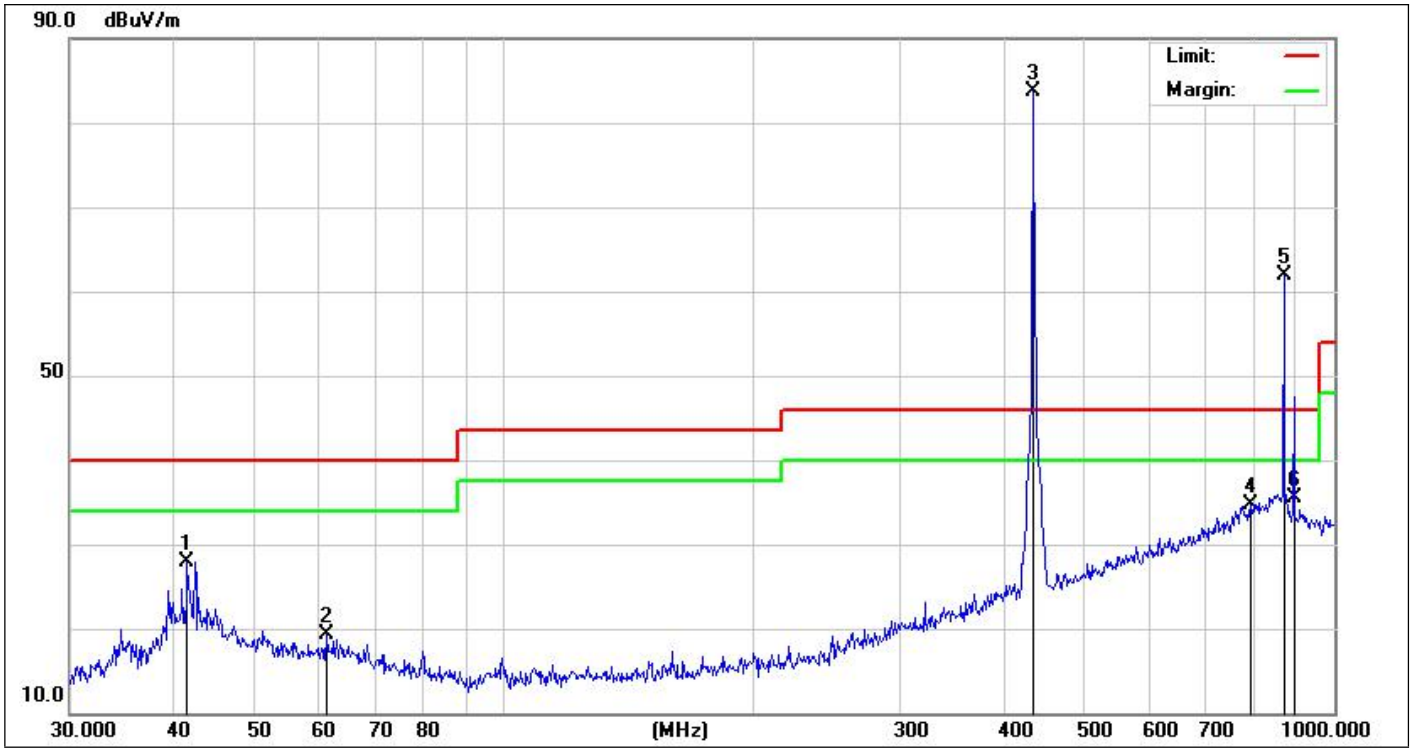

Site:	**LAB**	**Antenna::Horizontal**	**Temperature(C):26(C)**
Limit:	**FCC Part 15 C 3m Radiation**		**Humidity(%):60%**
EUT:	**Remote controller**	**Test Time:**	**2022-02-18**
M/N.:	**KZQY24J**	**Power Rating:**	**DC 3V**
Mode:	**TX**	**Test Engineer:**	**Dyson**
Note:			

No.	Frequency (MHz)	Reading (dBuV)	Factor (dB/m)	Level (dBuV/m)	Limit (dBuV/m)	Margin (dB)	Det.	Remark
1	41.5670	38.82	-10.83	27.99	40.00	-12.01	QP	
2	61.1315	29.11	-9.86	19.25	40.00	-20.75	QP	
3 *	434.0651	86.28	-2.53	83.75	100.82	-17.07	peak	
4	793.3958	29.08	5.58	34.66	46.00	-11.34	QP	
5	869.1300	55.73	6.09	61.82	80.82	-19	peak	
6	893.8567	30.14	5.46	35.60	46.00	-10.40	QP	

Note: 1. Result Level = Read Level+ Antenna Factor+ Cable Loss- Amp. Factor

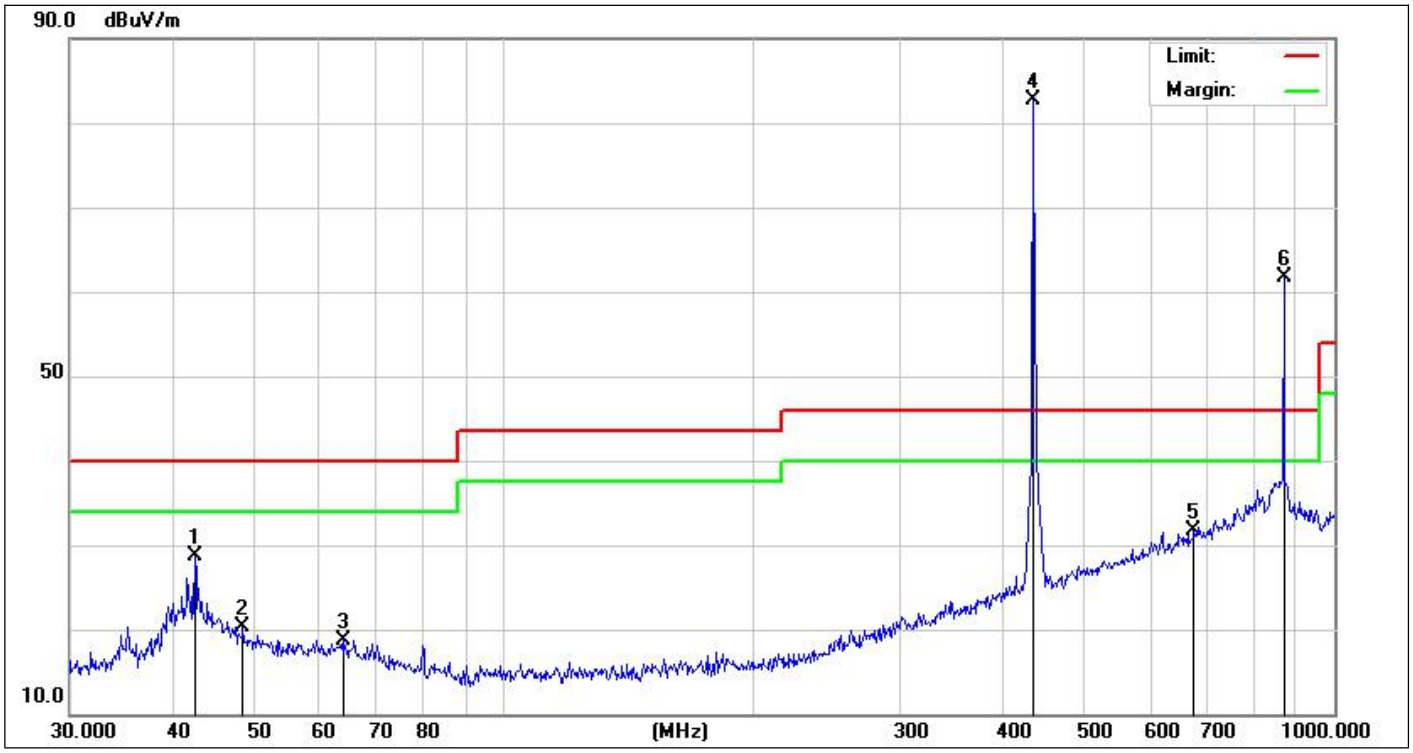

Site:	**LAB**	**Antenna::Vertical**	**Temperature(C):26(C)**
Limit:	**FCC Part 15 C 3m Radiation**		**Humidity(%):60%**
EUT:	**Remote controller**	**Test Time:**	**2022-02-18**
M/N.:	**KZQY24J**	**Power Rating:**	**DC 3V**
Mode:	**TX**	**Test Engineer:**	**Dyson**
Note:			

No.	Frequency (MHz)	Reading (dBuV)	Factor (dB/m)	Level (dBuV/m)	Limit (dBuV/m)	Margin (dB)	Det.	Remark
1	42.4508	39.37	-10.68	28.69	40.00	-11.31	QP	
2	48.5016	30.41	-10.16	20.25	40.00	-19.75	QP	
3	63.9827	28.56	-9.76	18.80	40.00	-21.20	QP	
4 *	434.0650	85.15	-2.53	82.62	100.82	36.62	peak	
5	677.5797	28.89	2.73	31.62	46.00	-14.38	QP	
6	869.1300	55.57	6.09	61.66	80.82	15.66	peak	

Note: 1. Result Level = Read Level+ Antenna Factor+ Cable Loss- Amp. Factor

7.2.6 Radiated spurious emission above 1GHz

Modulation:	OOK	Test Date :	Feb. 21, 2022
Frequency Range:	1000-6000MHz	Temperature :	25 ℃
Test Result:	PASS	Humidity :	50 %
Measured Distance:	3m	Test By:	Best

Freq.	Ant. Pol.	Reading Level(dBuV/m)		Correct Factor	Emission Level(dBuV/m)		AVG Factor	Limit 3m(dBuV/m)		Margin(dB)	
(MHz)	H/V	PK	AV	dB	PK	AV	dB	PK	AV	PK	AV
1301.624	V	72.29	61.62	-7.08	65.21	54.54	-10.67	80.82	60.82	-15.61	-6.28
1735.706	V	70.53	59.86	-6.40	64.13	53.46	-10.67	80.82	60.82	-16.69	-7.36
2169.481	V	70.28	59.61	-4.80	65.48	54.81	-10.67	80.82	60.82	-15.34	-6.01
2603.351	V	67.82	57.15	-2.15	65.67	55	-10.67	80.82	60.82	-15.15	-5.82
3037.743	V	64.95	54.28	0.64	65.59	54.92	-10.67	80.82	60.82	-15.23	-5.9
3471.549	V	63.84	53.17	0.69	64.53	53.86	-10.67	80.82	60.82	-16.29	-6.96
1301.624	H	71.42	60.75	-7.08	64.34	53.67	-10.67	80.82	60.82	-16.48	-7.15
1735.706	H	72.14	61.47	-6.40	65.74	55.07	-10.67	80.82	60.82	-15.08	-5.75
2169.481	H	71.29	60.62	-4.80	66.49	55.82	-10.67	80.82	60.82	-14.33	-5
2603.351	H	67.66	56.99	-2.15	65.51	54.84	-10.67	80.82	60.82	-15.31	-5.98
3037.743	H	63.98	53.31	0.64	64.62	53.95	-10.67	80.82	60.82	-16.2	-6.87
3471.549	H	65.12	54.45	0.69	65.81	55.14	-10.67	80.82	60.82	-15.01	-5.68

Note: (1) All Readings are Peak Value.

(2) Correct Factor= Antenna Factor +Cable Loss- Amplifier Gain

(3) Emission Level= Reading Level+Probe Factor +Cable Loss

(4) True Value = Emission Level + Duty Cycle Correction Factor

(5) DF= Duty Cycle Correction Factor

(6) Duty Cycle Correction Factor (dB) = 20log(Duty cycle)=]= -10.67dB

(7) Margin = PK Level – AV limit

(8) The "*" means restricted bands

(9) All the x/y/z orientation has been investigated, and only worst case is presented in this report.

(10) The EUT has been evaluated in xyz orientation, and the worst result have been recorded in the report.

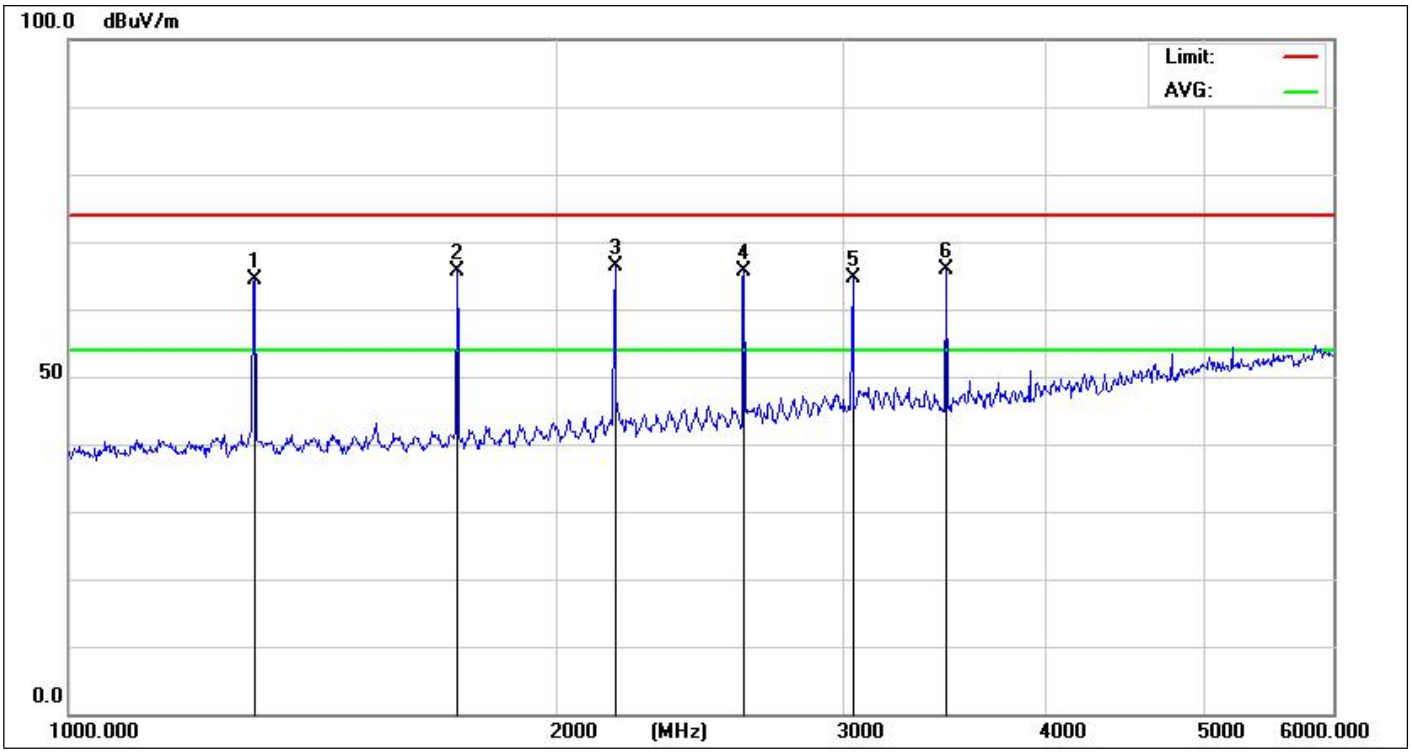

Site:	**LAB**	**Antenna::Horizontal**	**Temperature(C):26(C)**
Limit:	**FCC Part 15 C 3m Radiation**		**Humidity(%):60%**
EUT:	**Remote controller**	**Test Time:**	**2022-02-18**
M/N.:	**KZQY24J**	**Power Rating:**	**DC 3V**
Mode:	**TX**	**Test Engineer:**	**Dyson**
Note:			

No.	Frequency (MHz)	Reading (dBuV)	Factor (dB/m)	Level (dBuV/m)	Limit (dBuV/m)	Margin (dB)	Det.	Remark
1	1301.624	71.42	-7.08	64.34	74.00	-9.66	peak	
2	1735.706	72.14	-6.40	65.74	74.00	-8.26	peak	
3	2169.481	71.29	-4.80	66.49	74.00	-7.51	peak	
4	2603.351	67.66	-2.15	65.51	74.00	-8.49	peak	
5 *	3037.743	63.98	0.64	64.62	74.00	-9.38	peak	
6	3471.549	65.12	0.69	65.81	74.00	-8.19	peak	

Note: 1. Result Level = Read Level+ Antenna Factor+ Cable Loss- Amp. Factor

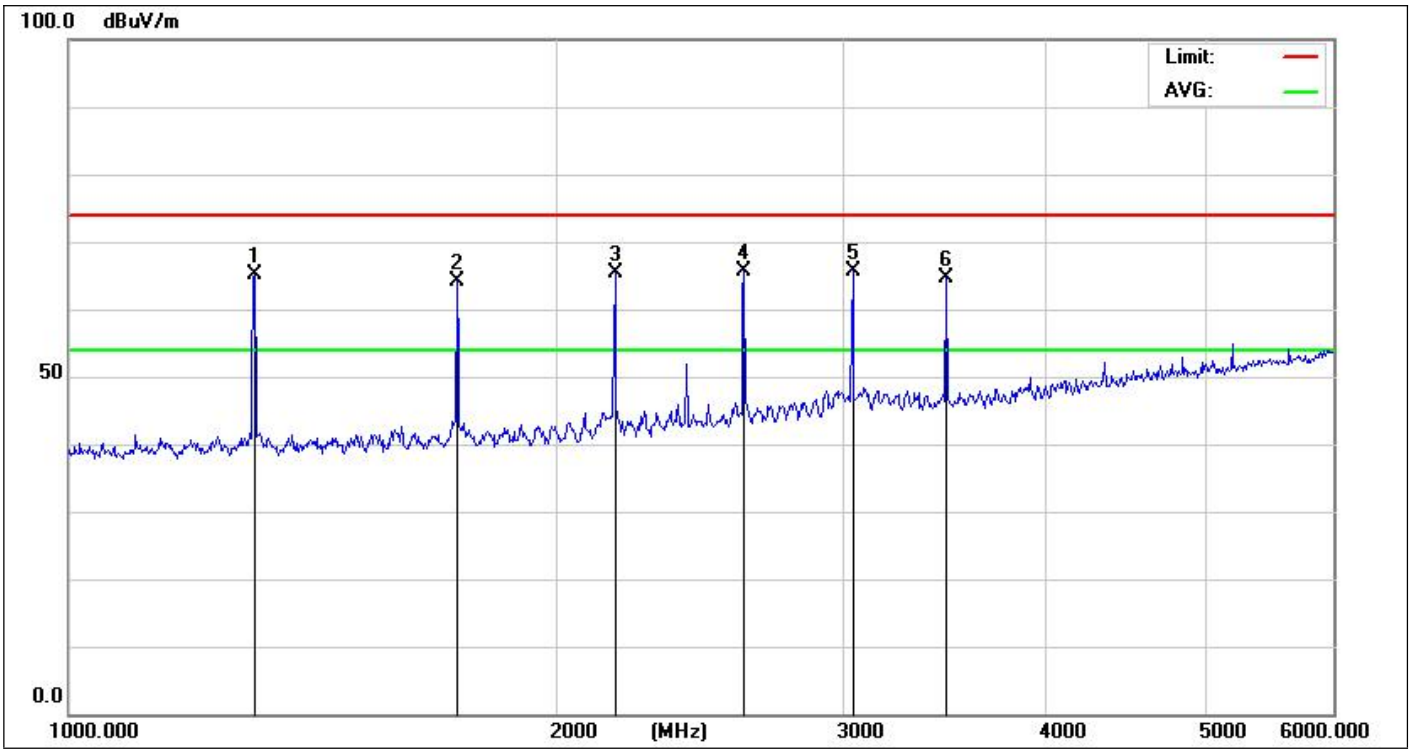

Site:	**LAB**	**Antenna::Vertical**	**Temperature(C):26(C)**
Limit:	**FCC Part 15 C 3m Radiation**		**Humidity(%):60%**
EUT:	**Remote controller**	**Test Time:**	**2022-02-18**
M/N.:	**KZQY24J**	**Power Rating:**	**DC 3V**
Mode:	**TX**	**Test Engineer:**	**Dyson**
Note:			

No.	Frequency (MHz)	Reading (dBuV)	Factor (dB/m)	Level (dBuV/m)	Limit (dBuV/m)	Margin (dB)	Det.	Remark
1	1301.624	72.29	-7.08	65.21	74.00	-8.79	peak	
2	1735.706	70.53	-6.40	64.13	74.00	-9.87	peak	
3 *	2169.481	70.28	-4.80	65.48	74.00	-8.52	peak	
4	2603.351	67.82	-2.15	65.67	74.00	-8.33	peak	
5	3037.743	64.95	0.64	65.59	74.00	-8.41	peak	
6	3471.549	63.84	0.69	64.53	74.00	-9.47	peak	

Note: 1. Result Level = Read Level+ Antenna Factor+ Cable Loss- Amp. Factor

7.3 TRANSMISSION REQUIREMENT

7.3.1 Applicable Standard

According to FCC Part 15.231(a)

7.3.2 Conformance Limit

According to FCC Part 15.231(a): A manually operated transmitter shall employ a switch that will automatically deactivate the transmitter within not more than 5 seconds of being released.

7.3.3 Test Configuration

Test according to clause 6.2 radio frequency test setup 2

7.3.4 Test Procedure

The following table is the setting of spectrum analyzer.

Spectrum analyzer	Setting
Attenuation	Auto
Span Frequency	0Hz
RBW	1M
VBW	3M
Detector	Peak
Trace	Max hold
Sweep Time	10S

a. The transmitter output (antenna port) was connected to the spectrum analyzer.
b. Set RBW of spectrum analyzer to 1MHz and VBW to 1MHz, Set Detector to Peak, Trace to Max Hold.
c. Set the span to 0Hz and the sweep time to 10s and record the value.

7.3.5 Test Results

Temperature:	24℃	Test Date:	Feb. 18, 2022
Humidity:	53 %	Test By:	KK
Test mode:	TX Mode		

Frequency.(MHz)	silent period between transmissions	Limit	Verdict
433.95	0.1884 S	5 seconds	PASS

Test Model	Transmitter Requirement	
	Channel 0: 433.95MHz	silent period between transmissions

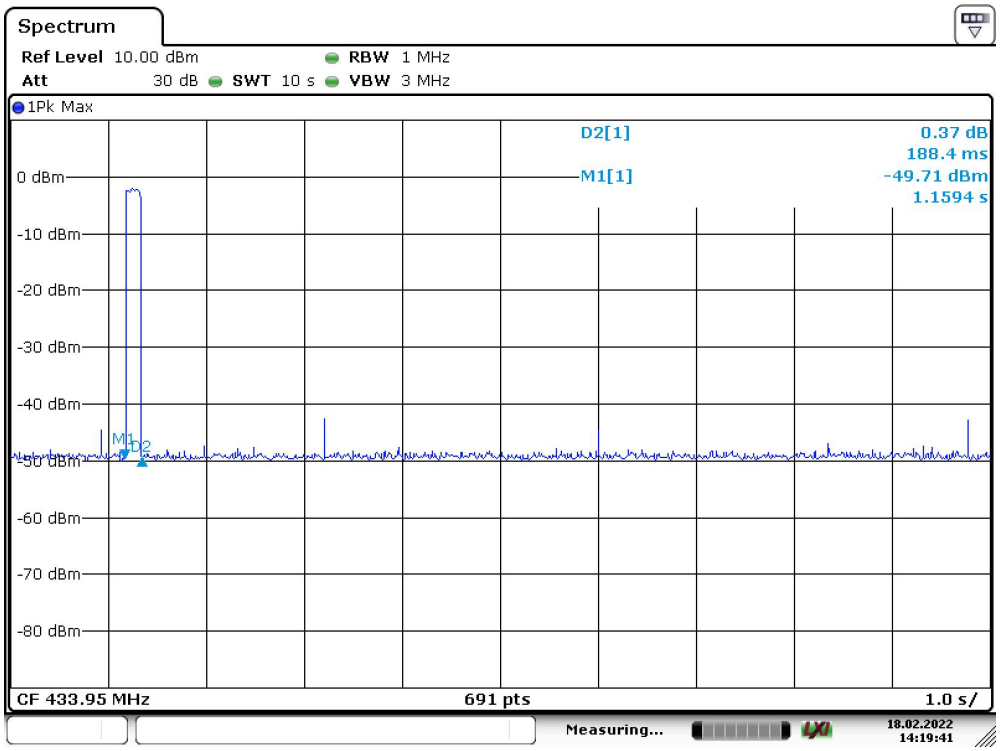

Date: 18.FEB.2022 14:19:41

7.4 Antenna Application

7.4.1 Antenna Requirement

For intentional device, according to FCC 47 CFR Section 15.203, an intentional radiator shall be designed to ensure that no antenna other than that furnished by the responsible party shall be used with the device.

7.4.2 Result

The EUT's antenna is internal antenna, using a permanently attached antenna which is not replaceable. The antenna's gain is 0dBi and meets the requirement.

APPENDIX I
(Photos of EUT)

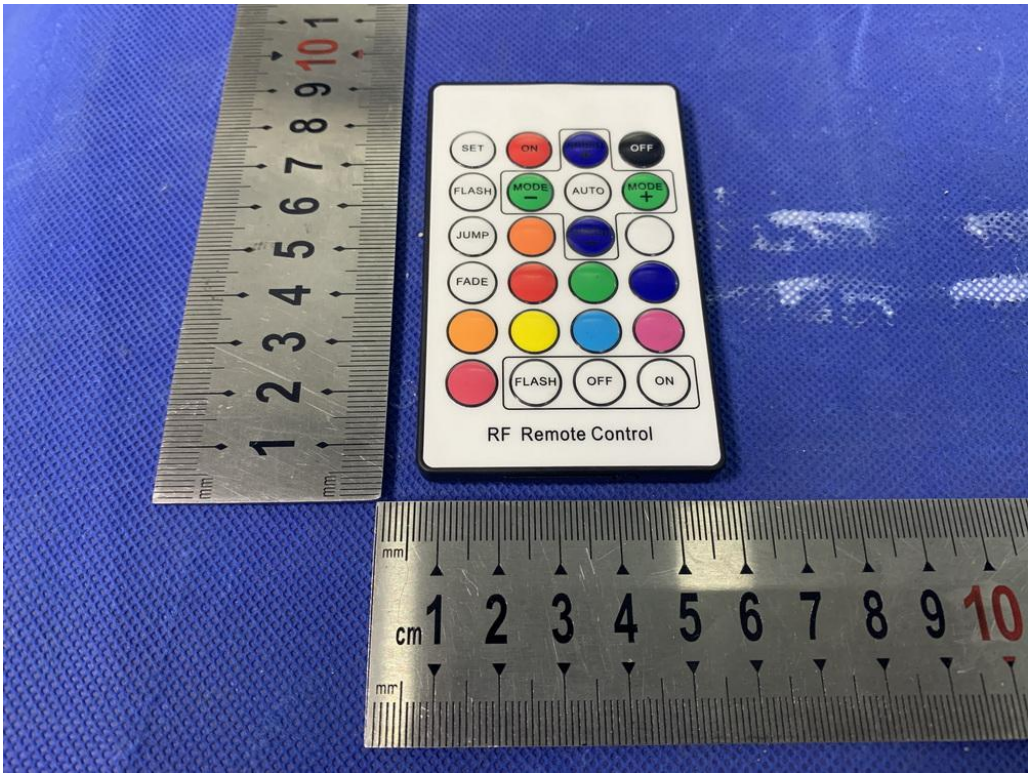
SET
ON
OFF
FLASH
MODE −
AUTO
MODE +
JUMP
FADE
FLASH
OFF
ON
RF Remote Control

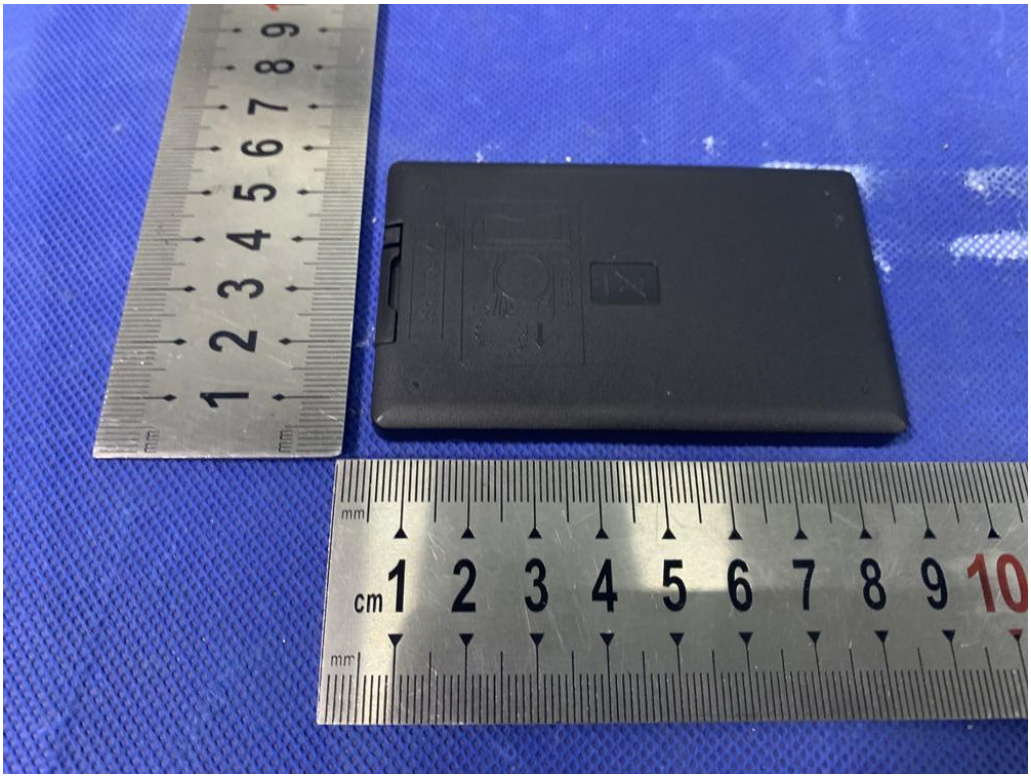

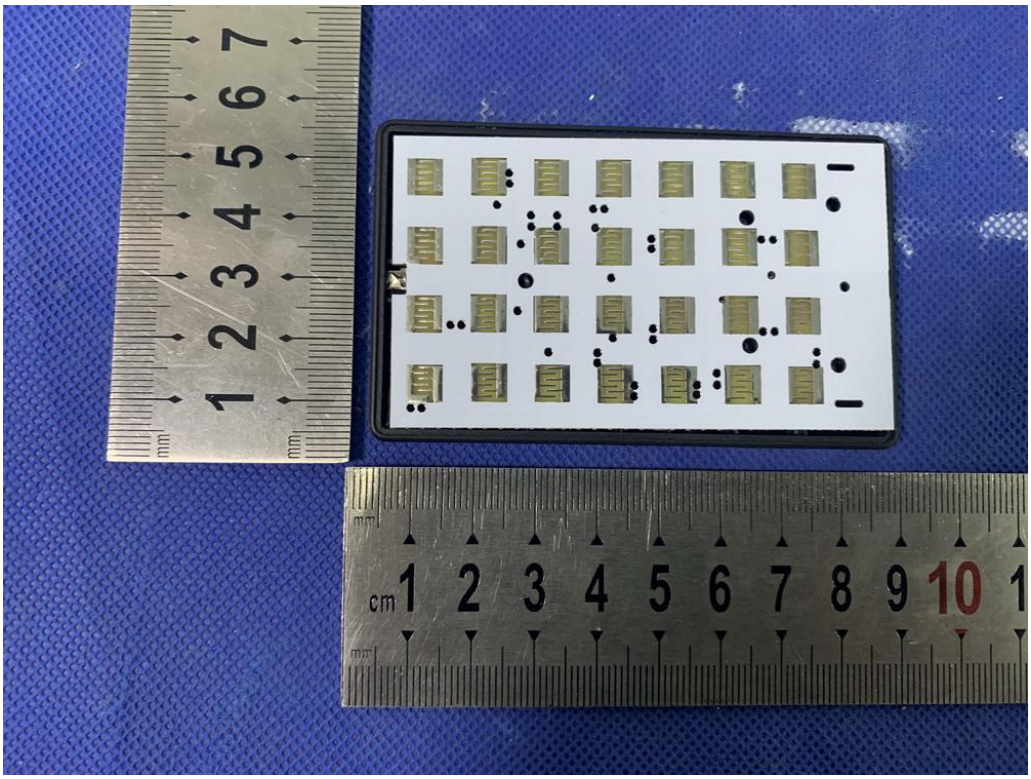

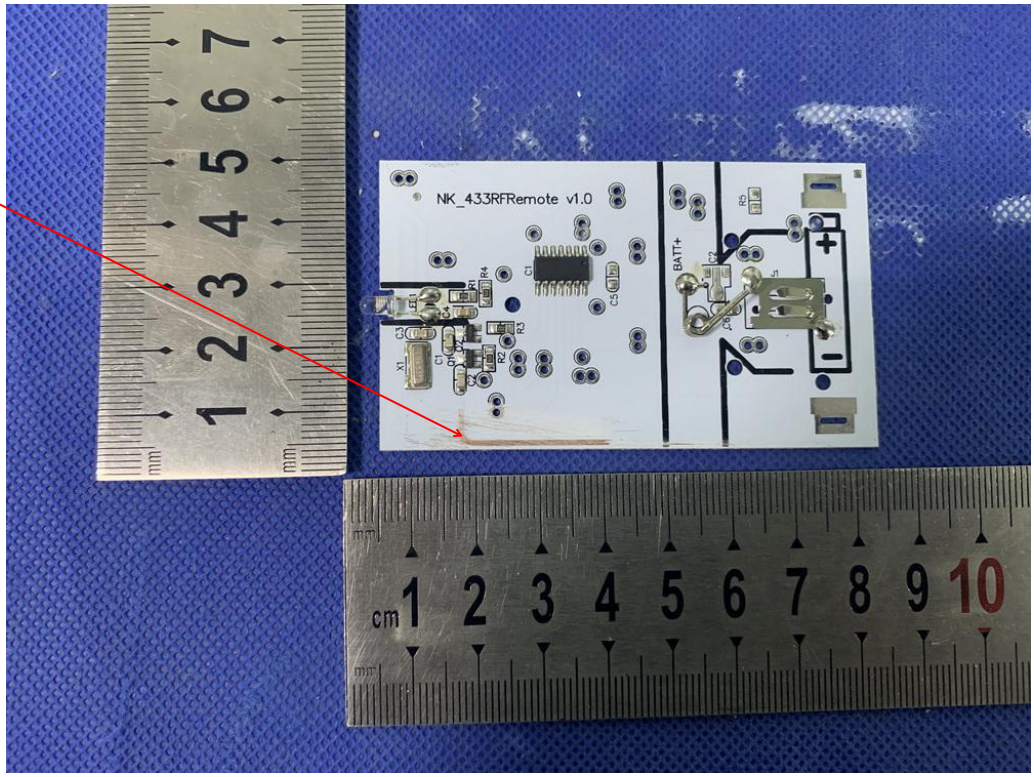
ANT
NK_433RFRemote v1.0
BATT+

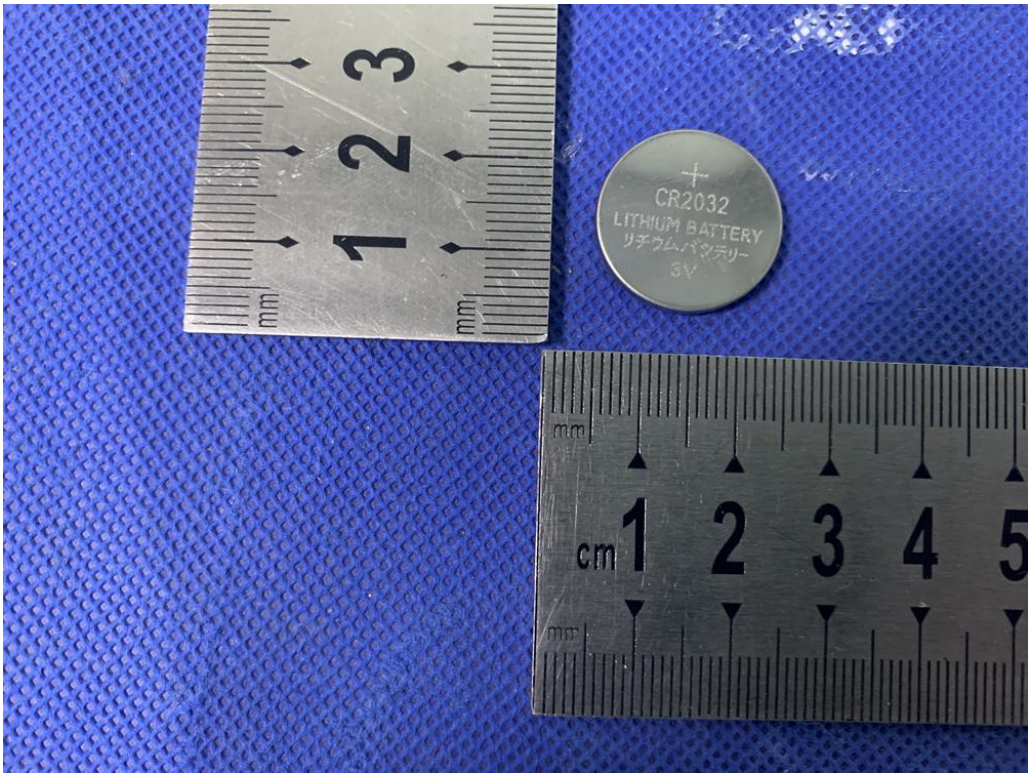

----------END OF REPORT----------