RF TEST REPORT

Applicant	Copeland Comfort Control LP
FCC ID	2A4JN-1F96U52
Product	WIFI Smart Thermostat
Brand	WIFI Smart Thermostat
Model	1F96U-52WFTR; 1F96U-52WFAS
Report No.	EFTA25070329-IE-02-R3
Issue Date	February 3, 2026

Eurofins TA Technology (Shanghai) Co., Ltd. tested the above equipment in accordance with the requirements in **FCC CFR47 Part 15E (2025)**. The test results show that the equipment tested is capable of demonstrating compliance with the requirements as documented in this report.

Prepared by: Xu Ying *Approved by: Xu Kai*

Eurofins TA Technology (Shanghai) Co., Ltd.

Building 3, No.145, Jintang Rd, Pudong Shanghai, P.R.China

TEL: +86-021-50791141/2/3

FAX: +86-021-50791141/2/3-8000

TABLE OF CONTENT

1. Test Laboratory 4
1.1. Notes of the test report 4
1.2. Test facility 4
1.3. Testing Location 4
2. General Description of Equipment under Test 5
2.1. Applicant and Manufacturer Information 5
2.2. General information 5
3. Applied Standards 7
4. Test Configuration 8
5. Test Case 10
5.1. Unwanted Emission 10
5.2. Conducted Emission 16
6. Test Results 17
6.1. Unwanted Emission 17
6.2. Conducted Emission 18
7. Main Test Instruments 19
8. The EUT Appearance 20
9. Test Setup Photos 21

This report shall not be reproduced except in full, without the written approval of Eurofins TA Technology (Shanghai) Co., Ltd.

Summary of measurement results

Number	Test Case	Clause in FCC rules	Verdict
1	Average output power	Refer to the Module report (Report No.: FR512010D, FCC ID: 2AC7Z-ESPC5WROOM1, Grant date:06/30/2025)	
2	Occupied bandwidth		
3	Frequency stability		
4	Power spectral density		
6	Unwanted Emissions	15.407(b), 15.205, 15.209	PASS
7	Conducted Emissions	15.207	PASS
Date of Testing: August 7, 2025 ~ August 27, 2025 Date of Sample Received: August 1, 2025			
Note: PASS: The EUT complies with the essential requirements in the standard. FAIL: The EUT does not comply with the essential requirements in the standard. All indications of Pass/Fail in this report are opinions expressed by Eurofins TA Technology (Shanghai) Co., Ltd. based on interpretations and/or observations of test results. Measurement Uncertainties were not taken into account and are published for informational purposes only.			

This report is also used for standard upgrade.
According to customer requirements the detailed standard upgrade please refers to following table:

Old Standard(s)	New Standard(s)
ANSI C63.10-2013	**ANSI C63.10-2020**

After technical evaluation, new standard conforms to the technical assessment of the original report. So the standard upgrade does not require to add any test.

This report shall not be reproduced except in full, without the written approval of Eurofins TA Technology (Shanghai) Co., Ltd.

1. Test Laboratory

1.1. Notes of the test report

This report shall not be reproduced in full or partial, without the written approval of **Eurofins TA Technology (Shanghai) Co., Ltd.** The results documented in this report apply only to the tested sample, under the conditions and modes of operation as described herein. Measurement Uncertainties were not taken into account and are published for informational purposes only. This report is written to support regulatory compliance of the applicable standards stated above.

1.2. Test facility

FCC (Designation number: CN1179, Test Firm Registration Number: 446626)

Eurofins TA Technology (Shanghai) Co., Ltd. has been listed on the US Federal Communications Commission list of test facilities recognized to perform electromagnetic emissions measurements.

A2LA (Certificate Number: 3857.01)

Eurofins TA Technology (Shanghai) Co., Ltd. has been listed by American Association for Laboratory Accreditation to perform electromagnetic emission measurement.

1.3. Testing Location

Company:	Eurofins TA Technology (Shanghai) Co., Ltd.
Address:	Building 3, No.145, Jintang Rd, Pudong Shanghai, P.R.China
City:	Shanghai
Post code:	201201
Country:	P. R. China
Contact:	Xu Kai
Telephone:	+86-021-50791141/2/3
Fax:	+86-021-50791141/2/3-8000
Website:	https://www.eurofins.com/electrical-and-electronics
E-mail:	Kain.Xu@cpt.eurofinscn.com

This report shall not be reproduced except in full, without the written approval of Eurofins TA Technology (Shanghai) Co., Ltd.

2. General Description of Equipment under Test

2.1. Applicant and Manufacturer Information

Applicant	Copeland Comfort Control LP
Applicant address	8100 West Florissant Ave, St. Louis, United States of America
Manufacturer	Copeland Comfort Control LP
Manufacturer address	8100 West Florissant Ave, St. Louis, United States of America

2.2. General information

EUT Description	
Model	1F96U-52WFTR; 1F96U-52WFAS
Lab internal SN	250801-24-002
Hardware Version	0059 5601003
Software Version	7017590402-ef4e670
Power Supply	External power supply
Antenna Type	PCB Antenna
Antenna Connector	A permanently attached antenna (meet with the standard FCC Part 15.203 requirement)
Antenna Gain	U-NII-1: 3.07 dBi U-NII-3: 2.80 dBi
Operating Frequency Range(s)	U-NII-1: 5150MHz-5250MHz U-NII-3: 5725MHz -5850MHz
Modulation Type	802.11a: OFDM 802.11n (HT20/HT40): OFDM 802.11ac (VHT20): OFDM 802.11ax SU (HE20): OFDMA
Operating temperature range	0 ° C to 49 ° C
Operating voltage range	18 VAC to 30 VAC
State voltage	24 VAC
Auxiliary Test Equipment	
Transformer	Manufacturer: White-Rodgers Model: 90-T50F3 Lab internal SN: 250801-24-004 Input: 120/208/240V AC Output: 24V DC
Note: 1. The EUT is sent from the applicant to Eurofins TA and the information of the EUT is declared by the applicant. 2. This device support automatically discontinue transmission, while the device is not transmitting any information, the device can automatically discontinue transmission and	

This report shall not be reproduced except in full, without the written approval of Eurofins TA Technology (Shanghai) Co., Ltd.

become standby mode for power saving. The device can detect the controlling signal of ACK message transmitting from remote device and verify whether it shall resend or discontinue transmission.

3. (a) Manufacturers implements security features in any digitally modulated devices capable of operating in any of the U-NII bands, so that third parties are not able to reprogram the device to operate outside the parameters for which the device was certified. The software prevents the user from operating the transmitter with operating frequencies, output power, modulation types or other radio frequency parameters outside those that were approved for the device. Manufacturers uses means including, but not limited to the use of a private network that allows only authenticated users to download software, electronic signatures in software or coding in hardware that is decoded by software to verify that new software can be legally loaded into a device to meet these requirements and must describe the methods in their application for equipment authorization.

4. The customer declares that 1F96U-52WFTR and 1F96U-52WFAS are the same except, only the logo are different. This report only tests 1F96U-52WFTR.

This report shall not be reproduced except in full, without the written approval of Eurofins TA Technology (Shanghai) Co., Ltd.

3. Applied Standards

According to the specifications of the manufacturer, it must comply with the requirements of the following standards:

Test standards:

FCC CFR47 Part 15E (2025) Unlicensed National Information Infrastructure Devices
ANSI C63.10-2020

Reference standard:

KDB 789033 D02 General UNII Test Procedures New Rules v02r01

This report shall not be reproduced except in full, without the written approval of Eurofins TA Technology (Shanghai) Co., Ltd.

4. Test Configuration

Test Mode

The EUT has been associated with peripherals and configuration operated in a manner tended to maximize its emission characteristics in a typical application.

In order to find the worst case condition, Pre-tests are needed at the presence of different data rate. Preliminary tests have been done on all the configuration for confirming worst case. Data rate below means worst-case rate of each test item.

Worst-case data rates are shown as following table.

Mode	Data Rate
802.11a	6 Mbps
802.11n HT20	MCS0
802.11n HT40	MCS0
802.11ac VHT20	MCS0
802.11ax HE20	MCS0

This report shall not be reproduced except in full, without the written approval of Eurofins TA Technology (Shanghai) Co., Ltd.

Wireless Technology and Frequency Range

Wireless Technology		Bandwidth	Channel	Frequency
Wi-Fi	U-NII-1	20 MHz	36	5180MHz
			40	5200MHz
			44	5220MHz
			48	5240MHz
		40 MHz	38	5190MHz
			46	5230MHz
	U-NII-3	20 MHz	149	5745MHz
			153	5765MHz
			157	5785MHz
			161	5805MHz
			165	5825MHz
		40 MHz	151	5755MHz
			159	5795MHz
Does this device support TPC Function? ☐Yes ☒No				

This report shall not be reproduced except in full, without the written approval of Eurofins TA Technology (Shanghai) Co., Ltd.

5. Test Case

5.1. Unwanted Emission

Ambient condition

Temperature	Relative humidity	Pressure
15°C ~ 35°C	20% ~ 80%	86 kPa ~ 106 kPa

Method of Measurement

The test set-up was made in accordance to the general provisions of ANSI C63.10. The Equipment Under Test (EUT) was set up on a non-conductive table in the semi-anechoic chamber. The test was performed at the distance of 3 m/10m below 1GHz, 3m above 1GHz between the EUT and the receiving antenna. The radiated emissions measurements were made in a typical installation configuration.
Sweep the whole frequency band range from 9kHz to the 10th harmonic of the carrier, and the emissions less than 20 dB below the permissible value are reported.

During the test, the height of receive antenna shall be moved from 1 to 4 meters, and the antenna shall be performed under horizontal and vertical polarization. The turntable shall be rotated from 0 to 360 degrees for detecting the maximum of radiated spurious signal level. The measurements shall be repeated with orthogonal polarization of the test antenna. The data of cable loss and antenna factor has been calibrated in full testing frequency range before the testing.
Set the spectrum analyzer in the following:
9kHz~150 kHz
RBW=200Hz, VBW=1kHz/ Sweep=AUTO
150 kHz~30MHz
RBW=9kHz, VBW=30kHz,/ Sweep=AUTO
Below 1GHz
RBW=100kHz / VBW=300kHz / Sweep=AUTO
a) Peak emission levels are measured by setting the instrument as follows:
Above 1GHz
PEAK: RBW=1MHz VBW=3MHz/ Sweep=AUTO
b) Average emission levels are measured by setting the instrument as follows:
Above 1GHz
AVERAGE: RBW=1MHz / VBW=3MHz / Sweep=AUTO
c) Detector: The measurements employing a CISPR quasi-peak detector except for the frequency bands 9-90 kHz, 110-490 kHz and above 1000 MHz. Radiated emission limits in these three bands are based on measurements employing an average detector.
d) Averaging type = power (i.e., rms) (As an alternative, the detector and averaging type may be set for linear voltage averaging. Some instruments require linear display mode to use linear voltage averaging. Log or dB averaging shall not be used.)
e) Sweep time = auto.

This report shall not be reproduced except in full, without the written approval of Eurofins TA Technology (Shanghai) Co., Ltd.

f) Perform a trace average of at least 100 traces if the transmission is continuous. If the transmission is not continuous, then the number of traces shall be increased by a factor of 1 / D, where D is the duty cycle. For example, with 50% duty cycle, at least 200 traces shall be averaged. (If a specific emission is demonstrated to be continuous—i.e., 100% duty cycle—then rather than turning ON and OFF with the transmit cycle, at least 100 traces shall be averaged.)

g) If tests are performed with the EUT transmitting at a duty cycle less than 98%, then a correction factor shall be added to the measurement results prior to comparing with the emission limit, to compute the emission level that would have been measured had the test been performed at 100% duty cycle. The correction factor is computed as follows:

1) If power averaging (rms) mode was used in the preceding step e), then the correction factor is [10 log (1 / D)], where D is the duty cycle. For example, if the transmit duty cycle was 50%, then 3 dB shall be added to the measured emission levels.

2) If linear voltage averaging mode was used in the preceding step e), then the correction factor is [20 log (1 / D)], where D is the duty cycle. For example, if the transmit duty cycle was 50%, then 6 dB shall be added to the measured emission levels.

3) If a specific emission is demonstrated to be continuous (100% duty cycle) rather than turning ON and OFF with the transmit cycle, then no duty cycle correction is required for that emission.

Reduce the video bandwidth until no significant variations in the displayed signal are observed in subsequent traces, provided the video bandwidth is no less than 1 Hz. For regulatory requirements that specify averaging only over the transmit duration (e.g., digital transmission system [DTS] and Unlicensed National Information Infrastructure [U-NII]), the video bandwidth shall be greater than [1 / (minimum transmitter on time)] and no less than 1 Hz.

The field strength of spurious emission was measured in the following position: EUT stand-up position (Z axis), lie-down position (X, Y axis). The worst emission was found in stand-up position (Z axis) and the loop antenna is vertical, others antenna are vertical and horizontal.

The test is in transmitting mode.

This report shall not be reproduced except in full, without the written approval of Eurofins TA Technology (Shanghai) Co., Ltd.

Test setup

9kHz~ 30MHz

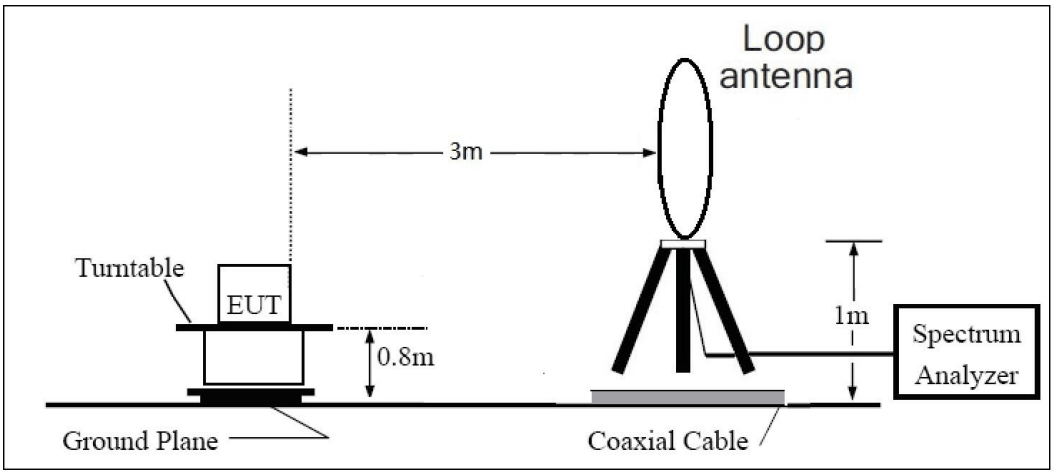

Note: Area side:2.4mX3.6m

Distance 10m

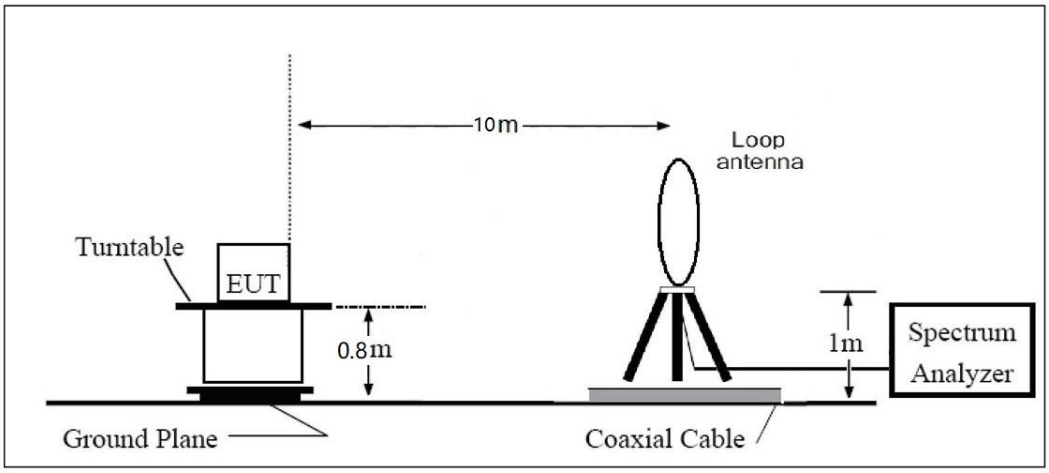

Note: Area side: 21m x 12m

This report shall not be reproduced except in full, without the written approval of Eurofins TA Technology (Shanghai) Co., Ltd.

30MHz~ 1GHz

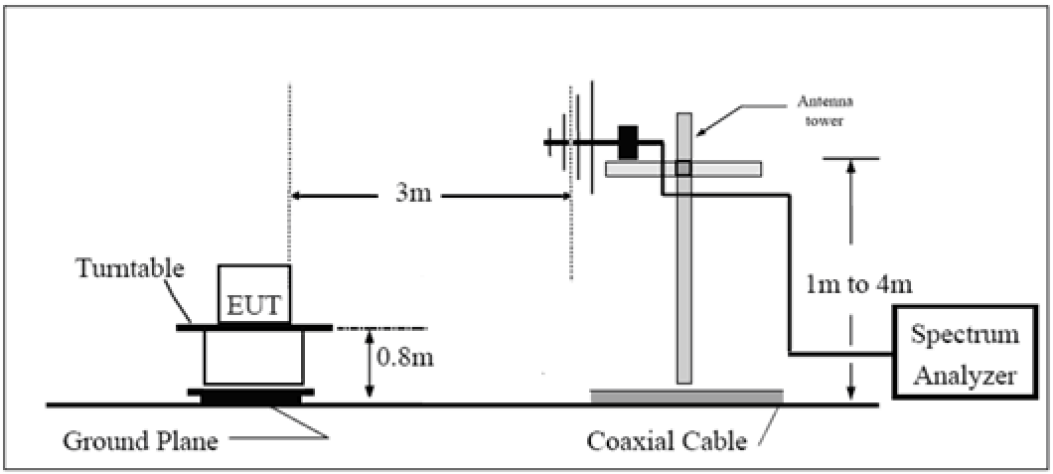

Note: Area side:2.4mX3.6m

Distance 10m

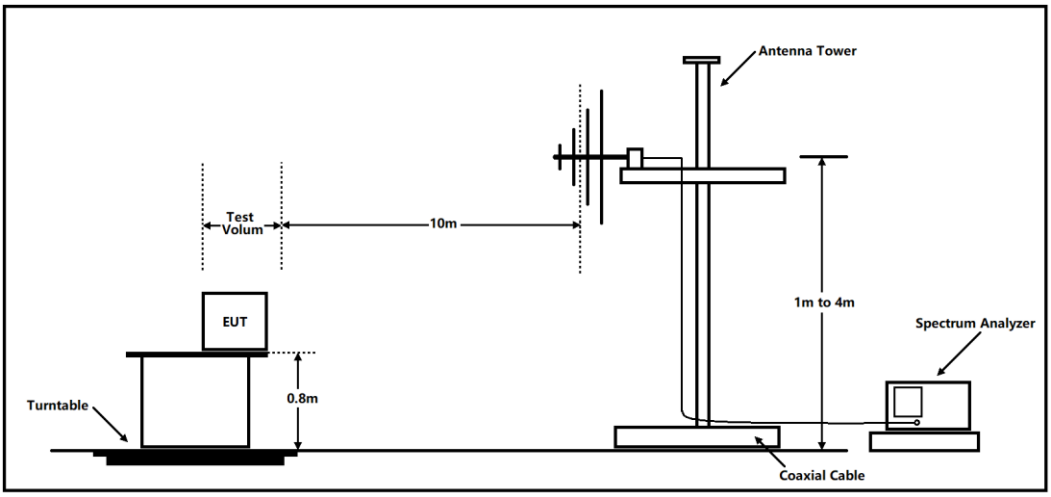

Note: Area side: 21m x 12m

Above 1GHz

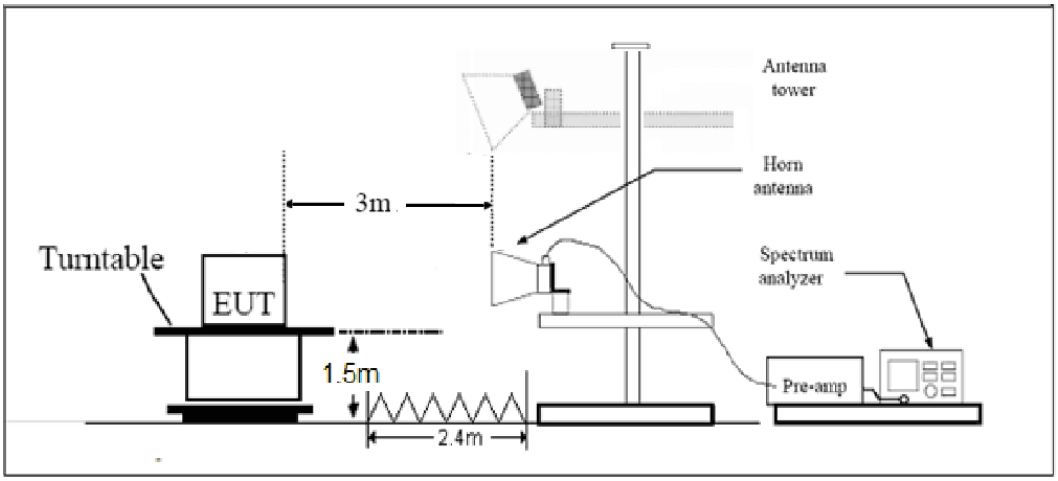

Note: Area side:2.4mX3.6m

This report shall not be reproduced except in full, without the written approval of Eurofins TA Technology (Shanghai) Co., Ltd.

Limits

(1) For transmitters operating in the 5725-5850 MHz band: All emissions shall be limited to a level of −27 dBm/MHz at 75 MHz or more above or below the band edge increasing linearly to 10 dBm/MHz at 25 MHz above or below the band edge, and from 25 MHz above or below the band edge increasing linearly to a level of 15.6 dBm/MHz at 5 MHz above or below the band edge, and from 5 MHz above or below the band edge increasing linearly to a level of 27 dBm/MHz at the band edge.

(2) For transmitters operating in the 5.15-5.25 GHz band: All emissions outside of the 5.15-5.35 GHz band shall not exceed an e.i.r.p. of −27 dBm/MHz(68.2dBμV/m).

(3) For transmitters operating in the 5.25-5.35 GHz band: All emissions outside of the 5.15-5.35 GHz band shall not exceed an e.i.r.p. of −27 dBm/MHz(68.2dBμV/m).

(4) For transmitters operating in the 5.47-5.725 GHz band: All emissions outside of the 5.47-5.725 GHz band shall not exceed an e.i.r.p. of −27 dBm/MHz(68.2dBμV/m).

Note: the following formula is used to convert the EIRP to field strength

§1、E[dBμV/m] = EIRP[dBm] - 20 log(d[meters]) + 104.77, where E = field strength and

d = distance at which field strength limit is specified in the rules;

§2、E[dBμV/m] = EIRP[dBm] + 95.2, for d = 3 meters

(5) Unwanted spurious emissions fallen in restricted bands per FCC Part15.205 shall comply with the general field strength limits set forth in § 15.209 as below table.

Frequency of emission (MHz)	Field strength(μV/m)	Field strength(dBμV/m)
0.009–0.490	2400/F(kHz)	/
0.490–1.705	24000/F(kHz)	/
1.705–30.0	30	/
30-88	100	40
88-216	150	43.5
216-960	200	46
Above960	500	54

This report shall not be reproduced except in full, without the written approval of Eurofins TA Technology (Shanghai) Co., Ltd.

MHz	MHz	MHz	GHz
0.090 - 0.110	16.42 - 16.423	399.9 - 410	4.5 - 5.15
[1]0.495 - 0.505	16.69475 - 16.69525	608 - 614	5.35 - 5.46
2.1735 - 2.1905	16.80425 - 16.80475	960 - 1240	7.25 - 7.75
4.125 - 4.128	25.5 - 25.67	1300 - 1427	8.025 - 8.5
4.17725 - 4.17775	37.5 - 38.25	1435 - 1626.5	9.0 - 9.2
4.20725 - 4.20775	73 - 74.6	1645.5 - 1646.5	9.3 - 9.5
6.215 - 6.218	74.8 - 75.2	1660 - 1710	10.6 - 12.7
6.26775 - 6.26825	108 - 121.94	1718.8 - 1722.2	13.25 - 13.4
6.31175 - 6.31225	123 - 138	2200 - 2300	14.47 - 14.5
8.291 - 8.294	149.9 - 150.05	2310 - 2390	15.35 - 16.2
8.362 - 8.366	156.52475 - 156.52525	2483.5 - 2500	17.7 - 21.4
8.37625 - 8.38675	156.7 - 156.9	2690 - 2900	22.01 - 23.12
8.41425 - 8.41475	162.0125 - 167.17	3260 - 3267	23.6 - 24.0
12.29 - 12.293	167.72 - 173.2	3332 - 3339	31.2 - 31.8
12.51975 - 12.52025	240 - 285	3345.8 - 3358	36.43 - 36.5
12.57675 - 12.57725	322 - 335.4	3600 - 4400	([2])
13.36 - 13.41			

Measurement Uncertainty

The assessed measurement uncertainty to ensure 95% confidence level for the normal distribution is with the coverage factor *k* = 1.96.

Frequency	Uncertainty for 3m
9kHz-30MHz	3.55 dB
30MHz-200MHz	4.17 dB
200MHz-1GHz	4.84 dB
1-18GHz	4.35 dB
18-26.5GHz	5.90 dB
26.5GHz~40GHz	5.92 dB
Frequency	Uncertainty for 10m
30MHz – 200MHz	3.39 dB
200MHz – 1GHz	3.82 dB
1GHz – 18GHz	6.51 dB
18GHz – 40GHz	6.31 dB

This report shall not be reproduced except in full, without the written approval of Eurofins TA Technology (Shanghai) Co., Ltd.

5.2. Conducted Emission

Ambient condition

Temperature	Relative humidity	Pressure
15°C ~ 35°C	20% ~ 80%	86 kPa ~ 106 kPa

Methods of Measurement

The EUT IS placed on a non-metallic table of 80cm height above the horizontal metal reference ground plane. During the test, the EUT was operating in its typical mode. The test method is according to ANSI C63.10.Connect the AC power line of the EUT to the LISN Use EMI receiver to detect the average and Quasi-peak value. RBW is set to 9kHz, VBW is set to 30kHz The measurement result should include both L line and N line.
The test is in transmitting mode.

Test Setup

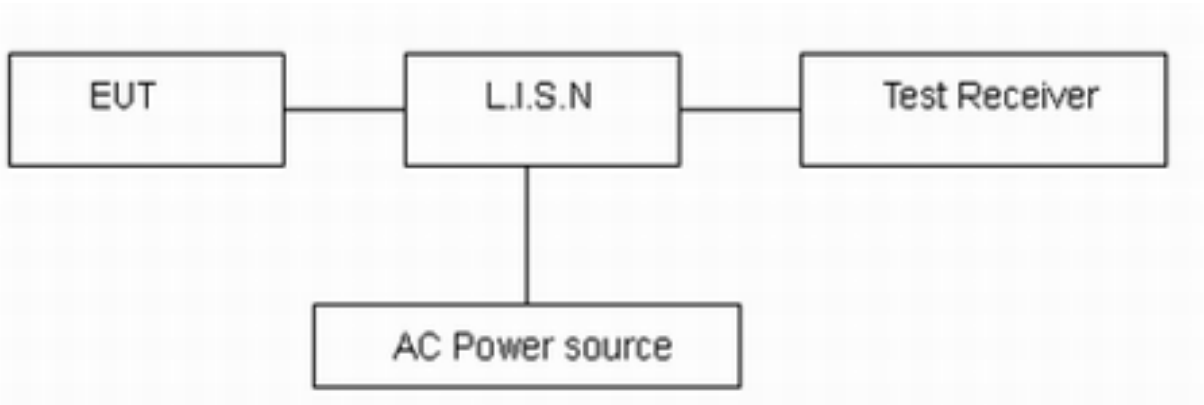

Note: AC Power source is used to change the voltage 110V/60Hz.

Limits

Frequency (MHz)	Conducted Limits(dBμV)	
	Quasi-peak	Average
0.15 - 0.5	66 to 56 *	56 to 46*
0.5 - 5	56	46
5 - 30	60	50
*: Decreases with the logarithm of the frequency.		

Measurement Uncertainty

The assessed measurement uncertainty to ensure 95% confidence level for the normal distribution is with the coverage factor k = 1.96, U= 2.69 dB.

This report shall not be reproduced except in full, without the written approval of Eurofins TA Technology (Shanghai) Co., Ltd.

6. Test Results

6.1. Unwanted Emission

The detailed test data see *EFTA25070329-IE-02-R3-ANNEX A* Test Result.

This report shall not be reproduced except in full, without the written approval of Eurofins TA Technology (Shanghai) Co., Ltd.

6.2. Conducted Emission

The detailed test data see *EFTA25070329-IE-02-R3-ANNEX A* Test Result.

This report shall not be reproduced except in full, without the written approval of Eurofins TA Technology (Shanghai) Co., Ltd.

7. Main Test Instruments

Name	Manufacturer	Type	Serial Number	Calibration Date	Expiration Date
EMI Test Receiver	R&S	ESCI3	100948	2025-05-07	2026-05-06
Loop Antenna	SCHWARZBECK	FMZB1519	1519-047	2023-04-16	2026-04-15
EMI Test Receiver	R&S	ESR	102389	2025-05-06	2026-05-05
Signal Analyzer	R&S	FSV40	101298	2025-05-07	2026-05-06
TRILOG Broadband Antenna	SCHWARZBECK	VULB 9163	01111	2022-10-25	2025-10-24
Horn Antenna	R&S	HF 907	102723	2023-11-24	2026-11-23
Amplifier	R&S	SCU18	10034	2025-05-06	2026-05-05
Horn Antenna	ETS-Lindgren	3160-09	00102643	2024-09-24	2027-09-23
Horn Antenna	STEATITE	QSH-SL-26-40 -K-15	16779	2023-01-17	2026-01-16
Amplifier	MicroWave	KLNA-180400 50	220826001	2025-05-06	2026-05-05
Software	R&S	EMC32	9.26.01	/	/
Artificial main network	R&S	ENV216	102191	2024-12-02	2026-12-01
EMI Test Receiver	R&S	ESR	101667	2025-05-06	2026-05-05
Software	R&S	EMC32	10.35.10	/	/

This report shall not be reproduced except in full, without the written approval of Eurofins TA Technology (Shanghai) Co., Ltd.

8. The EUT Appearance

Refer to *EUT Appearance*.

This report shall not be reproduced except in full, without the written approval of Eurofins TA Technology (Shanghai) Co., Ltd.

9. Test Setup Photos

Refer to *Part15E Test Setup.*

******** END OF REPORT ********

This report shall not be reproduced except in full, without the written approval of Eurofins TA Technology (Shanghai) Co., Ltd.