Shenzhen Huaxunshitong Technology Co.,Ltd.

Antenna specification

Customer name:_Yawei_

Project name	Y20PRO	Antenna frequency band	BT
Specification description	☐ support+shell fragment	☐ Single shrapnel	☐support+FPC+thimble
	☐FPC	☐FM aerial	☐GPS aerial
	☐coaxial-line	☐WIFI aerial: ☐FPC+wire rod: ☐PCB+wire rod:	
Customer confirmation			

Supplier confirmation	Radio frequency confirmation	Structural confirmation	check
contacts	Wang pengchao	mobile phone	13480925226
telephone	0755-23705212	facsimile	0755-23705213
mailbox	szhuaxunshitong@126.com		
address:F3-005, Hongfenghua Internet Creative Park, No.1 Huangtiandamen Road, Hangcheng Street, Baoan District, Shenzhen			

1.Test environment

	test project	equipment
1.（S-parameter）	1. （Return Loss） 2.（VSWR）	: Agilent E5071B HP 8753D
2.（Active ）	1.（TRP） 2.（TIS）	1. ETS 7x4x3 m (3D) Chamber ETS 5x3x3 m (3D) Chamber 2.: Agilent 8960 E5515B ×2 StarPoint SP6011
3.（Passive）	1.（Gain）2.（Efficiency）	1.ETS 7x4x3 m (3D) Chamber ETS 5x3x3 m (3D) Chamber 2. Agilent E5071B HP 8753D

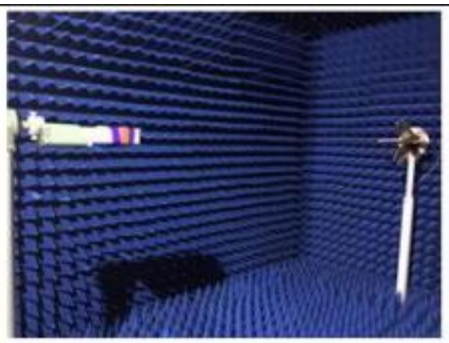

2.matching circuit-BT aerial：

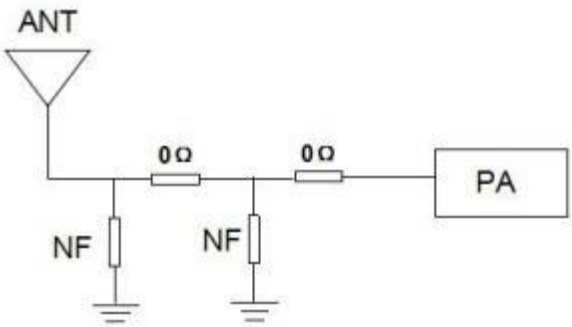

Our company has not made any modification to the matching circuit

3 Efficiency and gain

Passive Test For WIFI2.4										
Freq (MHz)	Effi (%)	Effi (dB)	Gain (dBi)	Gain (dBd)	UHIS (%)	DHIS (%)	Max (dB)	Min (dB)	Attenut Hor	Attenut Ver
2400	15.92	-7.98	-3	-5.15	8.988	6.933	-3	-22.53	52.03	53.99
2410	17.64	-7.53	-2.67	-4.82	10.074	7.569	-2.67	-22.33	51.99	53.84
2420	15.46	-8.11	-2.94	-5.09	8.699	6.763	-2.94	-23.73	52.04	53.98
2430	13.69	-8.64	-3.58	-5.73	7.69	6.002	-3.58	-24.29	52.23	54.02
2440	19.36	-7.13	-1.86	-4.01	10.959	8.404	-1.86	-23.75	52.54	54.25
2450	20.71	-6.84	-1.64	-3.79	11.866	8.84	-1.64	-22.69	52.64	54.11
2460	16.69	-7.78	-2.73	-4.88	9.754	6.935	-2.73	-23.09	52.59	54.02
2470	18.01	-7.44	-2.67	-4.82	10.83	7.184	-2.67	-20.29	52.66	54.04
2480	24.36	-6.13	-1.43	-3.58	14.934	9.428	-1.43	-19.13	53.06	54.43
2490	31.18	-5.06	-0.45	-2.6	19.202	11.976	-0.45	-17.55	53.33	54.57
2500	25.04	-6.01	-1.49	-3.64	15.699	9.34	-1.49	-18.19	53.11	54.29

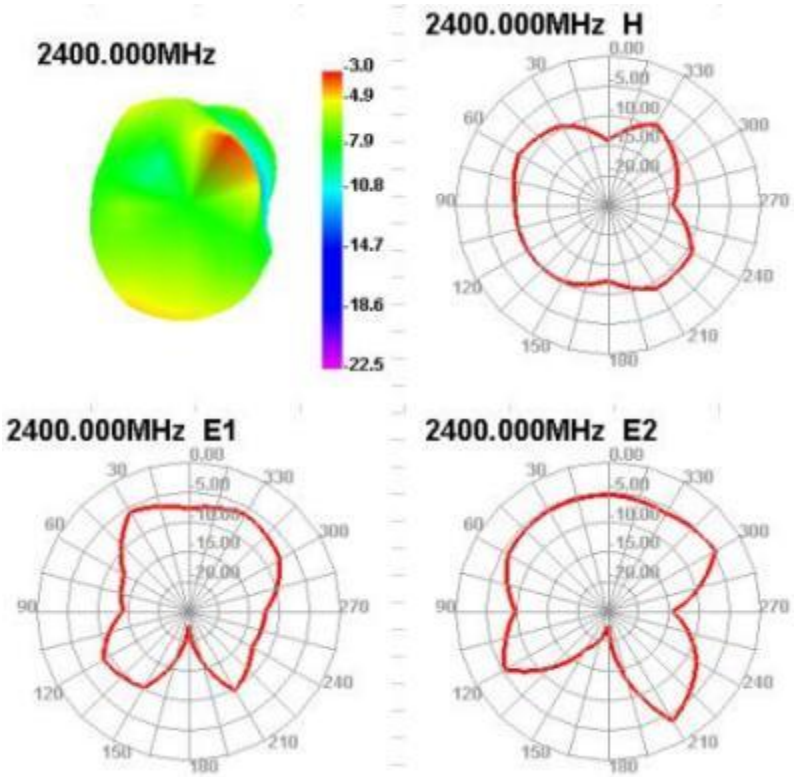

4.BT Measured effect of antenna

Testing environment: Open outdoor
Distance test:he mobile phone is connected with the bracelet and fixed on a bracket with a height of 1.4M, Wear the bracelet correctly and gradually move away from the mobile phone.。
Test mobile phone: iPhone
1 Play music/call without being stuck: More than 17 meters
2 Connect APP to test no dropped calls: More than 17 meters
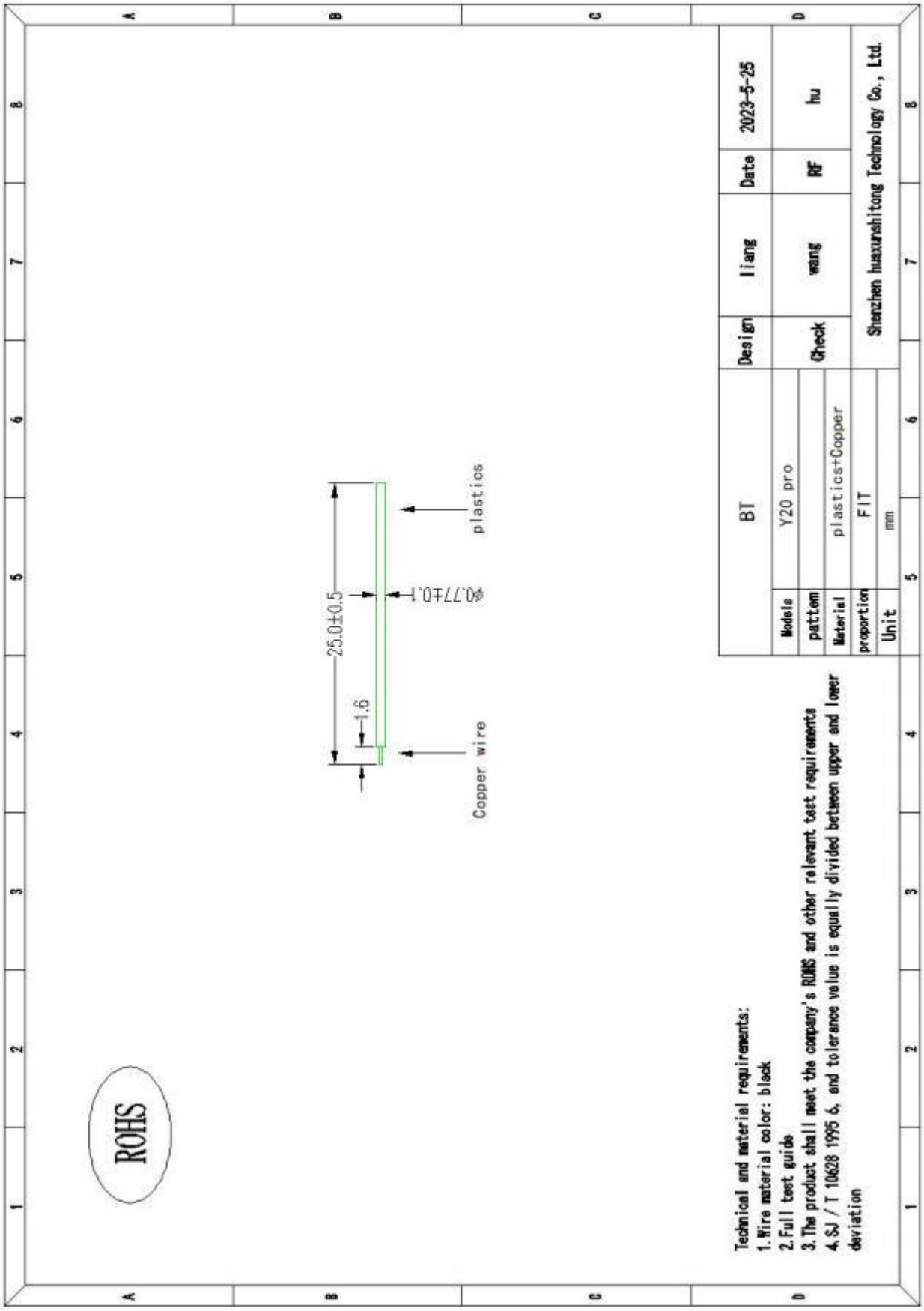
5.Structural drawings