FCC Test Report

FCC ID: 2A4MY-UAGWCP01

Product: Wireless Charging Pad

Trade Name: N/A

Model Number: UAG-WCP-01

Family Model: 9B4410114042

Report No.: S23091106501001

Prepared for

Urban Armor Gear, LLC

1601 Alton Pkwy, Suite C, Irvine, California 92606

Prepared by

Shenzhen NTEK Testing Technology Co., Ltd.

1/F, Building E, Fenda Science Park, SanweiCommunity,Xixiang Street,
Bao'an District, Shenzhen P.R. China

Tel:400-800-6106,0755-2320 0050 / 2320 0090
Website:http://www.ntek.org.cn

TEST RESULTCERTIFICATION

Applicant's name ..... : Urban Armor Gear, LLC

Address ..... : 1601 Alton Pkwy, Suite C, Irvine, California 92606

Manufacturer's Name ..... : Urban Armor Gear, LLC

Address ..... : 1601 Alton Pkwy, Suite C, Irvine, California 92606

Product Name: Wireless Charging Pad

Model and/or type reference : UAG-WCP-01

Family Model: 9B4410114042

Standards ..... : FCC part 15C
ANSI C63.10:2013
KDB 680106 D01 RF Exposure Wireless Charging App v03r01

This device described above has been tested by ShenzhenNTEK Testing Technology Co., Ltd., and the test results show that the equipment under test (EUT) is in compliance with the FCC requirements. And it is applicable only to the tested sample identified in the report.
This report shall not be reproduced except in full, without the written approval of ShenzhenNTEK Testing Technology Co., Ltd., this document may be altered or revised by Shenzhen NTEK Testing Technology Co., Ltd., personnel only, and shall be noted in the revision of the document.

The test results of this report relate only to the tested sample identified in this report.

Date of Test .....:

TestSampleNumber…….....……..: S230911065002

Date (s) of performance of tests .....: Sep 11. 2023 ~ Oct 07. 2023

Date of Issue.....: Oct 07. 2023

Test Result.....: **Pass**

Testing Engineer : Gavan Zhang

(Gavan Zhang)

Authorized Signatory : Alex

(Alex Li)

Table of Contents **Page**

1 . TEST SUMMARY 4
1.1 FACILITIES AND ACCREDITATIONS 5
1.2 LABORATORY ACCREDITATIONS AND LISTINGS 5
1.3 MEASUREMENT UNCERTAINTY 5
2 . GENERAL INFORMATION 7
2.1 GENERAL DESCRIPTION OF EUT 7
2.2 DESCRIPTION OF TEST SETUP 9
2.3 DESCRIPTION TEST PERIPHERAL AND EUT PERIPHERAL 10
2.4 MEASUREMENT INSTRUMENTS LIST 11
3 . EMC EMISSION TEST 12
3.1 CONDUCTED EMISSION MEASUREMENT 12
3.1.1 POWER LINE CONDUCTED EMISSION 12
3.1.2 TEST PROCEDURE 13
3.1.3 TEST SETUP 13
3.1.4 EUT OPERATING CONDITIONS 13
3.1.5 TEST RESULTS 14
3.2 RADIATED EMISSION MEASUREMENT 16
3.2.1 LIMITS OF RADIATED EMISSION MEASUREMENT 16
3.2.2 TEST PROCEDURE 17
3.2.3 TEST SETUP 18
3.2.4 TEST RESULTS 19
4. BANDWIDTH TEST 22
4.1TEST PROCEDURE 22
4.2TEST SETUP 22
4.3 TEST RESULT 23
5. ANTENNA APPLICATION 24
5.1 Antenna Requirement 24
5.2 Result 24

1. TEST SUMMARY

Test procedures according to the technical standards:

EMC Emission					
Standard	Test Item	FCC Rules	Limit	Judgment	Remark
FCC part 15C ANSI C63.10:2013	Conducted Emission	§15.207	/	PASS	
	Radiated Emission	§15.209	/	PASS	
	ANTENNA APPLICATION	§15.203	/	PASS	
	20dB BANDWIDTH	§15.215	/	PASS	

NOTE:

(1)'N/A' denotes test is not applicable in this Test Report

(2) For client's request and manual description, the test will not be executed.

1.1 FACILITIES AND ACCREDITATIONS

All measurement facilities used to collect the measurement data are located at 1/F, Building E, Fenda Science Park, Sanwei Community, Xixiang Street, Bao'an District, Shenzhen 518126 P.R. China.

The sites are constructed in conformance with the requirements of ANSI C63.7, ANSI C63.10 and CISPR Publication 22.

1.2 LABORATORY ACCREDITATIONS AND LISTINGS

Site Description

CNAS-Lab.	:	The Certificate Registration Number is L5516.
IC-Registration	:	The Certificate Registration Number is 9270A-1.
FCC- Accredited	:	Test Firm Registration Number:463705. Designation Number: CN1184
A2LA-Lab.	:	The Certificate Registration Number is 4298.01 This laboratory is accredited in accordance with the recognized International Standard ISO/IEC 17025:2005General requirements for the competence of testing and calibration laboratories. This accreditation demonstratestechnical competence for a defined scope and the operation of a laboratory quality management system (refer to joint ISO-ILAC-IAF Communiqué dated 8 January 2009).
Name of Firm	:	Shenzhen NTEK Testing Technology Co., Ltd.
Site Location	:	1/F, Building E, Fenda Science Park, Sanwei Community, Xixiang Street, Bao'an District, Shenzhen 518126 P.R. China.

1.3 MEASUREMENT UNCERTAINTY

The reported uncertainty of measurement **y ±U**, where expended uncertainty **U** is based on a standard uncertainty multiplied by a coverage factor of **k=2**, providing a level of confidence of approximately **95** %.

A. Conducted Measurement :

Test Site	Method	Measurement Frequency Range	U, (dB)	NOTE
NTEKC01	ANSI	150 KHz ~ 30MHz	2.8	

B. Radiated Measurement :

Test Site	Method	Measurement Frequency Range	U, (dB)	NOTE
NTEKA01	ANSI	9KHz ~1000MHz	2.64	
		1GHz ~12.4GHz	2.40	

C. Occupied Bandwidth: Uncertainty ±3.7dB

Revision History

Report No.	Version	Description	Issued Date
S23091106501001	Rev.01	Initial issue of report	Oct 07. 2023

2. GENERAL INFORMATION

2.1GENERAL DESCRIPTION OF EUT

Product Feature and Specification	
Equipment	Wireless Charging Pad
Trade Name	N/A
FCC ID	2A4MY-UAGWCP01
Model No.	UAG-WCP-01
Family Model	9B4410114042
Model Difference	All models are identical except models' name.
Operating Frequency	111kHz~205kHz
Antenna Type	Induction coil
Power Rating	5V2A,9V2.22A,12V1.67A
Wireless Output	5W / 7.5W / 10W / 15W
Battery	N/A
HW Version	N/A
SW Version	N/A

2.1.1 DESCRIPTION OF TEST MODES

To investigate the maximum EMI emission characteristics generates from EUT, the test system was pre-scanning tested base on the consideration of following EUT operation mode or test configuration mode which possible have effect on EMI emission level. Each of these EUT operation mode(s) or test configuration mode(s) mentioned above was evaluated respectively.

EUT Exercise

The Transmitter was operated in the normal operating mode. The TX frequency was fixed which was for the purpose of the measurements.

The following summary table is showing all test modes to demonstrate in compliance with the standard.

Test Cases	
Test Item	Data Rate/ Modulation
AC Conducted Emission	Mode 1: Max load
Radiated Test Cases	Mode 1: Max load

Wireless output 15W(Max)full load, half load and no load mode has been tested. But the Max Load mode is the worst mode, and only this mode was presented in this report.

2.2DESCRIPTION OF TEST SETUP

For AC Conducted Emission Mode

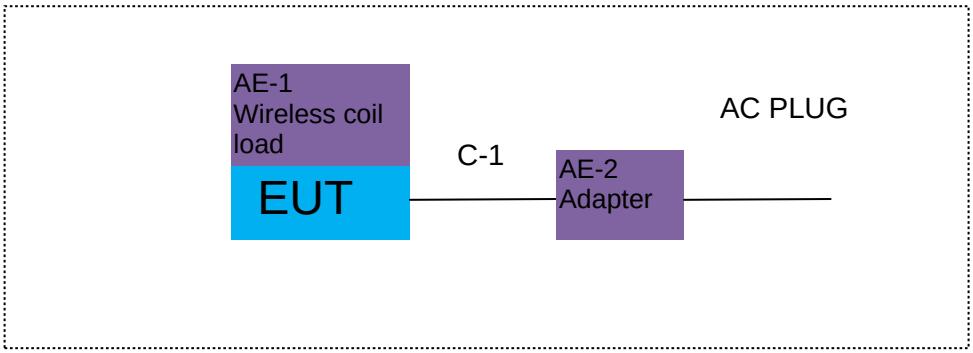

For Radiated Test Cases

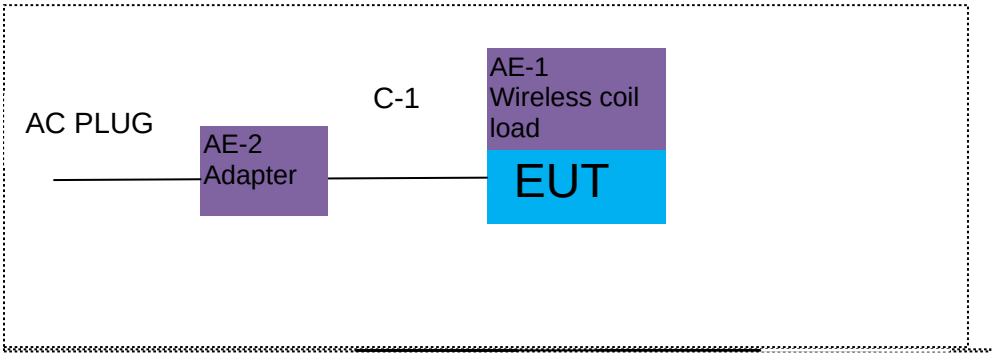

2.3 DESCRIPTION TEST PERIPHERAL AND EUT PERIPHERAL

The EUT has been tested as an independent unit together with other necessary accessories or support units. The following support units or accessories were used to form a representative test configuration during the tests.

Item	Equipment	Brand	Model/Type No.	Series No.	Note
AE-1	Wireless coil load	N/A	N/A	N/A	Peripherals
AE-2	Adapter	N/A	N/A	N/A	Peripherals

Item	Cable Type	Shielded Type	Ferrite Core	Length	Note
C-1	Power Cable	NO	NO	1.0m	

Note:

(1) The support equipment was authorized by Declaration of Confirmation.

(2) For detachable type I/O cable should be specified the length in cm in 『Length』 column.

(3) “YES” means “shielded”“with core”; “NO” means “unshielded”“without core”.

2.4MEASUREMENT INSTRUMENTS LIST

RadiationTest equipment

	Kind of Equipment	Manufacturer	Type No.	Serial No.	Last calibration	Calibrated until	Calibration period
1	Spectrum Analyzer	Aglient	E4407B	MY45108040	2023.03.27	2024.03.26	1 year
2	Spectrum Analyzer	Agilent	N9020A	MY49100060	2023.03.27	2024.03.26	1 year
4	Test Receiver	R&S	ESPI7	101318	2023.03.27	2024.03.26	1 year
5	Bilog Antenna	TESEQ	CBL6111D	31216	2023.03.27	2024.03.26	1 year
6	50Ω Coaxial Switch	Anritsu	MP59B	6200983705	2023.05.06	2026.05.05	3 year
7	Amplifier	EMC	EMC051835 SE	980246	2023.05.29	2024.05.28	1 year
8	Amplifier	MITEQ	TTA1840-35-HG	177156	2023.05.29	2024.05.28	1 year
9	Loop Antenna	ARA	PLA-1030/B	1029	2023.05.29	2024.05.28	1 year
10	Test Cable (9KHz-30MHz)	N/A	R-01	N/A	2022.06.17	2025.06.16	3 year
11	Test Cable (30MHz-1GHz)	N/A	R-02	N/A	2022.06.17	2025.06.16	3 year

Conduction Test equipment

Item	Kind of Equipment	Manufacturer	Type No.	Serial No.	Last calibration	Calibrated until	Calibration period
1	Test Receiver	R&S	ESCI	101160	2023.03.27	2024.03.26	1 year
2	LISN	R&S	ENV216	101313	2023.03.27	2024.03.26	1 year
3	LISN	SCHWARZBECK	NNLK 8129	8129245	2023.03.27	2024.03.26	1 year
4	50ΩCoaxial Switch	ANRITSU CORP	MP59B	6200983704	2023.05.06	2026.05.05	3 year
5	Test Cable (9KHz-30MHz)	N/A	C01	N/A	2023.05.06	2026.05.05	3 year
6	Test Cable (9KHz-30MHz)	N/A	C02	N/A	2023.05.06	2026.05.05	3 year
7	Test Cable (9KHz-30MHz)	N/A	C03	N/A	2023.05.06	2026.05.05	3 year

3. EMC EMISSION TEST

3.1 CONDUCTED EMISSION MEASUREMENT

3.1.1 POWER LINE CONDUCTED EMISSION (Frequency Range 150KHz-30MHz)

FREQUENCY (MHz)	limit	
	Quasi-peak	Average
0.15 -0.5	66 - 56 *	56 - 46 *
0.50 -5.0	56.00	46.00
5.0 -30.0	60.00	50.00

Note:

(1) The tighter limit applies at the band edges.

(2) The limit of " * " marked band means the limitation decreases linearly with the logarithm of the frequency in the range.

The following table is the setting of the receiver

Receiver Parameters	Setting
Attenuation	10 dB
Start Frequency	0.15 MHz
Stop Frequency	30 MHz
IF Bandwidth	9 kHz

3.1.2 TEST PROCEDURE

a. The EUT was placed 0.8 meters from the horizontal ground plane with EUT being connected to the power mains through a line impedance stabilization network (LISN). All other support equipments powered from additional LISN(s). The LISN provide 50 Ohm/ 50uH of coupling impedance for the measuring instrument.
b. Interconnecting cables that hang closer than 40 cm to the ground plane shall be folded back and forth in the center forming a bundle 30 to 40 cm long.
c. I/O cables that are not connected to a peripheral shall be bundled in the center. The end of the cable may be terminated, if required, using the correct terminating impedance. The overall length shall not exceed 1 m.
d. LISN at least 80 cm from nearest part of EUT chassis.
e. For the actual test configuration, please refer to the related Item –EUT Test Photos.

3.1.3 TEST SETUP

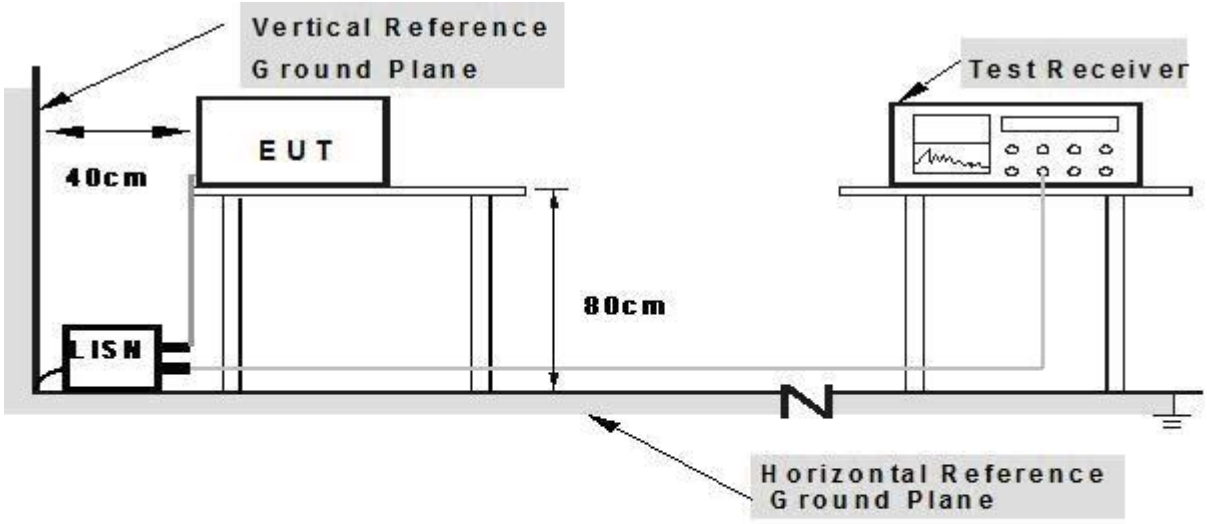

Note: 1.Support units were connected to second LISN.
2.Both of LISNs (AMN) are 80 cm from EUT and at least 80 from other units and other metal planes

3.1.4 EUT OPERATING CONDITIONS

The EUT tested system was configured as the statements of **2.3** Unless otherwise a special operating condition is specified in the follows during the testing.

3.1.5TEST RESULTS

EUT:	Wireless Charging Pad	Model Name. :	UAG-WCP-01
Temperature:	21.1℃	Relative Humidity:	48%
Pressure:	1010hPa	Phase :	L
Test Mode:	Mode 1	Test Voltage:	AC 120V/60Hz

Frequency (MHz)	Reading Level (dBμV)	Correct Factor (dB)	Measure-ment (dBμV)	Limits (dBμV)	Margin (dB)	Remark
0.1500	49.83	9.93	59.76	66.00	-6.24	QP
0.1500	37.46	9.93	47.39	56.00	-8.61	AVG
0.1940	42.12	10.01	52.13	63.86	-11.73	QP
0.1940	26.83	10.01	36.84	53.86	-17.02	AVG
0.2460	33.99	10.14	44.13	61.89	-17.76	QP
0.2460	18.52	10.14	28.66	51.89	-23.23	AVG
0.4420	22.68	10.53	33.21	57.02	-23.81	QP
0.4420	19.15	10.53	29.68	47.02	-17.34	AVG
7.0420	33.34	9.68	43.02	60.00	-16.98	QP
7.0420	31.64	9.68	41.32	50.00	-8.68	AVG
18.1940	29.67	9.71	39.38	60.00	-20.62	QP
18.1940	29.08	9.71	38.79	50.00	-11.21	AVG

Remark:

1. All readings are Quasi-Peak and Average values.
2. Factor = Insertion Loss + Cable Loss.

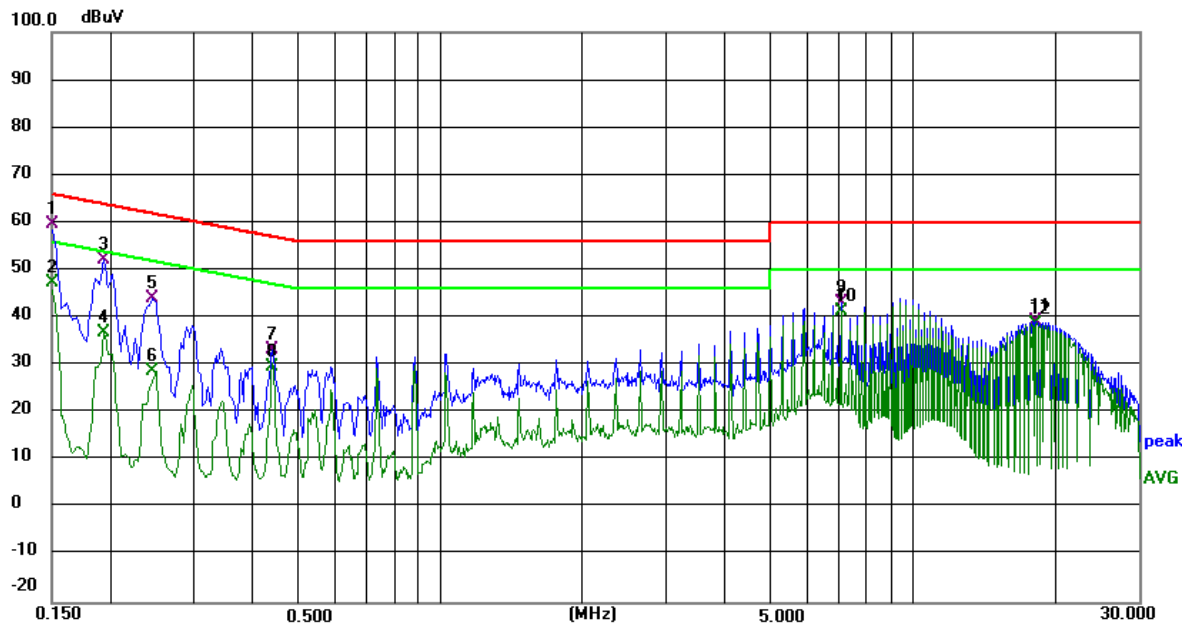

EUT:	Wireless Charging Pad	Model Name. :	UAG-WCP-01
Temperature:	21.1℃	Relative Humidity:	48%
Pressure:	1010hPa	Phase :	N
Test Mode:	Mode 1	Test Voltage:	AC 120V/60Hz

Frequency (MHz)	Reading Level (dBμV)	Correct Factor (dB)	Measure-ment (dBμV)	Limits (dBμV)	Margin (dB)	Remark
0.1500	47.29	9.93	57.22	66.00	-8.78	QP
0.1500	35.54	9.93	45.47	56.00	-10.53	AVG
0.2020	40.09	10.04	50.13	63.53	-13.40	QP
0.2020	23.75	10.04	33.79	53.53	-19.74	AVG
0.4420	23.19	10.53	33.72	57.02	-23.30	QP
0.4420	19.04	10.53	29.57	47.02	-17.45	AVG
1.7620	24.11	13.18	37.29	56.00	-18.71	QP
1.7620	22.40	13.18	35.58	46.00	-10.42	AVG
4.4060	32.79	9.67	42.46	56.00	-13.54	QP
4.4060	32.14	9.67	41.81	46.00	-4.19	AVG
6.7540	35.09	9.68	44.77	60.00	-15.23	QP
6.7540	34.20	9.68	43.88	50.00	-6.12	AVG

Remark:

1. All readings are Quasi-Peak and Average values.
2. Factor = Insertion Loss + Cable Loss.

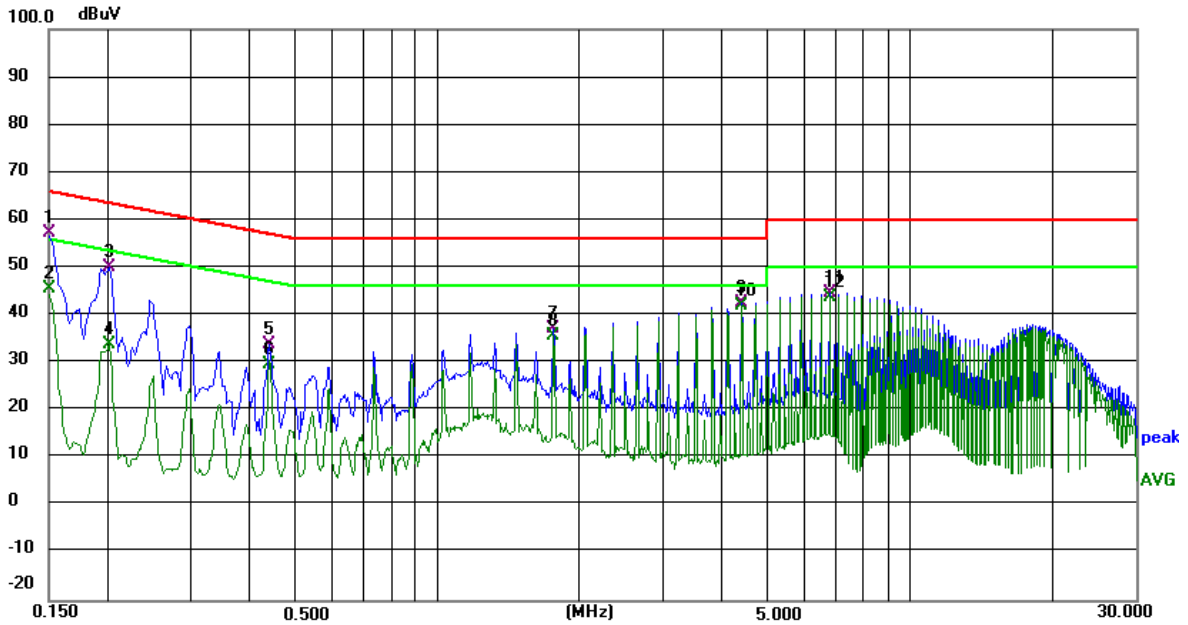

3.2 RADIATED EMISSION MEASUREMENT

3.2.1 LIMITS OF RADIATED EMISSION MEASUREMENT

The emissions from an intentional radiator shall not exceed the field strength levels specified in the following table 15.209(a):

Frequency (MHz)	Field strength (microvolts/meter)	Measurement distance (meters)
0.009-0.490	2400/F(kHz)	300
0.490-1.705	24000/F(kHz)	30
1.705-30.0	30	30
30-88	100**	3
88-216	150**	3
216-960	200**	3
Above 960	500	3

15.205 Restricted bands of operation

MHz	MHz	MHz	GHz
0.090-0.110	16.42-16.423	399.9-410	4.5-5.15
[1]0.495-0.505	16.69475-16.69525	608-614	5.35-5.46
2.1735-2.1905	16.80425-16.80475	960-1240	7.25-7.75
4.125-4.128	25.5-25.67	1300-1427	8.025-8.5
4.17725-4.17775	37.5-38.25	1435-1626.5	9.0-9.2
4.20725-4.20775	73-74.6	1645.5-1646.5	9.3-9.5
6.215-6.218	74.8-75.2	1660-1710	10.6-12.7
6.26775-6.26825	108-121.94	1718.8-1722.2	13.25-13.4
6.31175-6.31225	123-138	2200-2300	14.47-14.5
8.291-8.294	149.9-150.05	2310-2390	15.35-16.2
8.362-8.366	156.52475-156.52525	2483.5-2500	17.7-21.4
8.37625-8.38675	156.7-156.9	2690-2900	22.01-23.12
8.41425-8.41475	162.0125-167.17	3260-3267	23.6-24.0
12.29-12.293	167.72-173.2	3332-3339	31.2-31.8
12.51975-12.52025	240-285	3345.8-3358	36.43-36.5
12.57675-12.57725	322-335.4	3600-4400	(2)
13.36-13.41			

Notes:

(1) Measurement was performed at an antenna to the closed point of EUT distance ofmeters.

(2) Emission level (dBuV/m)=20log Emission level (uV/m).

(3) Only spurious frequency is permitted to locate within the Restricted Bands specified in provision of 15.205, and the emissions located in restricted bands also comply with 15.209limit.

(4) The emission limits shown in the above table are based on measurements employing a CISPR quasi-peak detector except for the frequency bands 9-90 kHz, 110-490 kHz and above 1000 MHz. Radiated emission limits in these three bands are based on measurements employing an average detector

3.2.2 TEST PROCEDURE

Test Arrangement for Radiated Emissions up to 1 GHz

a. The EUT was placed on the top of a rotating table 0.8 meters above the ground at an accredited testfacility. The table was rotated 360 degrees to determine the position of the highest radiation.
b. The EUT was set 3 meters away from the interference-receiving antenna, which was mounted on the topof a variable-height antenna tower.
c. The antenna is a broadband antenna(Blow 30M, use loop antenna), and its height is varied from one meter to four meters above theground to determine the maximum value of the field strength. Both horizontal and vertical polarizations ofthe antenna are set to make the measurement.
d. For each suspected emission, the EUT was arranged to its worst case and then the antenna was tuned toheights from 1 meter to 4 meters and the rotatable table was turned from 0 degrees to 360 degrees to findthe maximum reading.

Note: The resolution bandwidth and video bandwidth of test receiver/spectrum analyzer is 120kHz forquasi-peak detection (QP) at frequency below 1GHz.

During the radiated emission test, the Spectrum Analyzer was set with the following configurations:

Use the following receiver/spectrum analyzer settings:
Span = wide enough to fully capture the emission being measured
RBW=200Hz for 9KHz to 150KHz,
RBW=9kHz for 150KHz to 30MHz,
RBW=120KHz for 30MHz to 1GHz
VBW ⩾ 3*RBW
Sweep = auto
Detector function = QP
Trace = max hold

3.2.3 TEST SETUP

(a) For Radiated Emission Test Set-Up, Frequency Below 30MHz

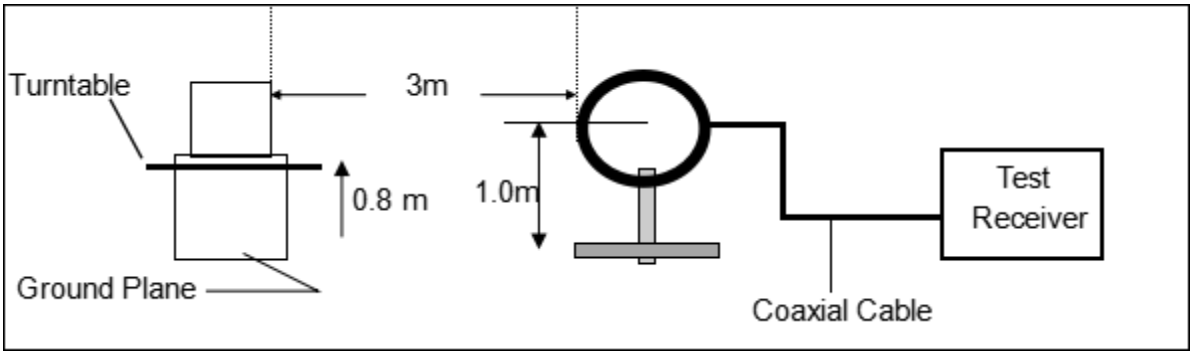

(b) For Radiated Emission 30~1000MHz

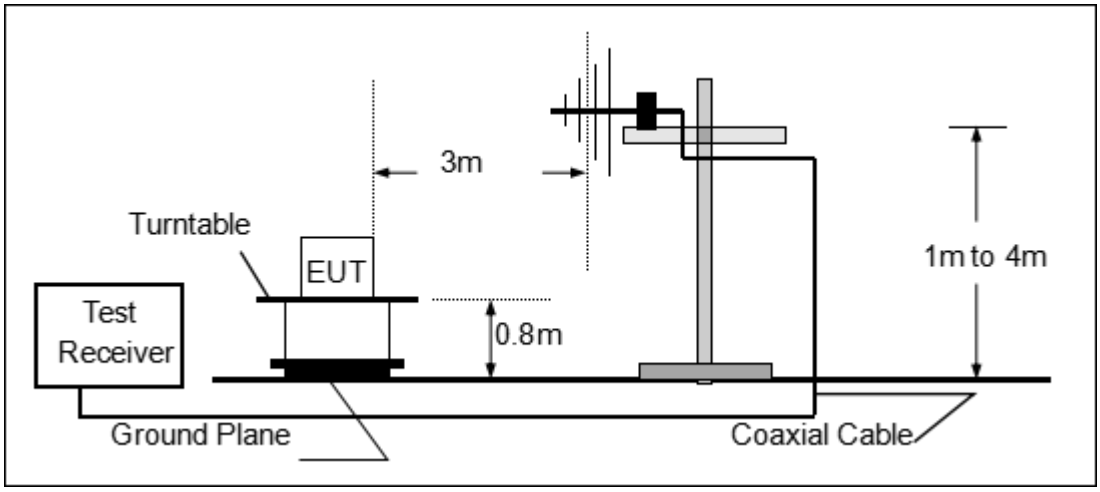

3.2.4TEST RESULTS

TEST RESULTS(9KHz~30MHz)

Note:

EUT:	Wireless Charging Pad	Model Name. :	UAG-WCP-01
Temperature:	24℃	Relative Humidity:	54%
Pressure:	1010hPa	Test Power :	AC 120V/60Hz
Test Mode :	Mode 1	Polarization:	X

Frequency (MHz)	Ant.Pol.	Emission Level (dBuV/m)	Limits (dBuV/m)	Margin (dB)	Remark
0.046	X	49.15	114.349	-65.20	Avg
0.084	X	46.13	109.119	-62.99	Avg
0.121	X	74.19	105.949	-31.76	Avg(fundamental frequency)
0.797	X	47.12	69.575	-22.46	QP
1.583	X	43.68	63.615	-19.93	QP
10.295	X	42.39	69.542	-27.15	QP

Note:

Below 30MHz, Pre-test the X, Y, Z axis to find X axis is worst case, so only record X axis test data.

X: Field strength which this device generates since the position of the charging coil and loop antenna differ by 0 degrees.

Y: Field strength which this device generates since the position of the charging coil and loop antenna differ by 90 degrees.

Z: Field strength which this device generates since the position of the charging coil and loop antenna differ by 180 degrees.

TEST RESULTS(30MHz ~1000MHz)

EUT:	Wireless Charging Pad	Model Name. :	UAG-WCP-01
Temperature:	25.6	Relative Humidity:	54
Pressure:	1010hPa	Test Power :	AC 120V/60Hz
Test Mode :	Mode 1	Polarization:	Vertical

Polar (H/V)	Frequency (MHz)	Meter Reading (dBuV)	Factor (dB)	Emission Level (dBuV/m)	Limits (dBuV/m)	Margin (dB)	Remark
V	30.0000	5.39	26.47	31.86	40.00	-8.14	QP
V	86.5029	16.41	16.28	32.69	40.00	-7.31	QP
V	92.7871	13.72	17.03	30.75	43.50	-12.75	QP
V	163.7550	18.24	17.84	36.08	43.50	-7.42	QP
V	192.4186	22.61	16.43	39.04	43.50	-4.46	QP
V	287.9904	10.60	20.07	30.67	46.00	-15.33	QP

Remark:
Emission Level= Meter Reading+ Factor, Margin= Emission Level- Limit.

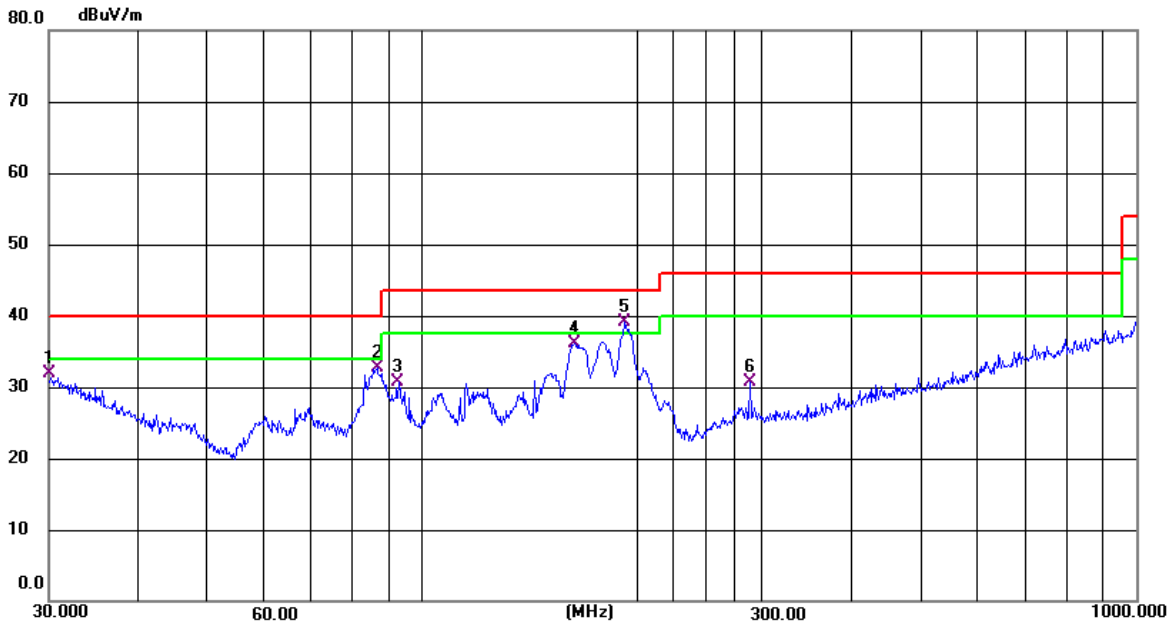

EUT:	Wireless Charging Pad	Model Name. :	UAG-WCP-01
Temperature:	25.6	Relative Humidity:	54
Pressure:	1010hPa	Test Power :	AC 120V/60Hz
Test Mode :	Mode 1	Polarization:	Horizontal

Polar (H/V)	Frequency (MHz)	Meter Reading (dBuV)	Factor (dB)	Emission Level (dBuV/m)	Limits (dBuV/m)	Margin (dB)	Remark
H	75.9773	7.91	14.65	22.56	40.00	-17.44	QP
H	84.7019	10.30	16.02	26.32	40.00	-13.68	QP
H	122.4040	7.26	18.75	26.01	43.50	-17.49	QP
H	163.7550	12.69	17.84	30.53	43.50	-12.97	QP
H	178.7584	16.17	17.01	33.18	43.50	-10.32	QP
H	191.7450	17.30	16.44	33.74	43.50	-9.76	QP
H	337.2155	12.66	21.18	33.84	46.00	-12.16	QP

Remark:
Emission Level= Meter Reading+ Factor, Margin= Emission Level- Limit.

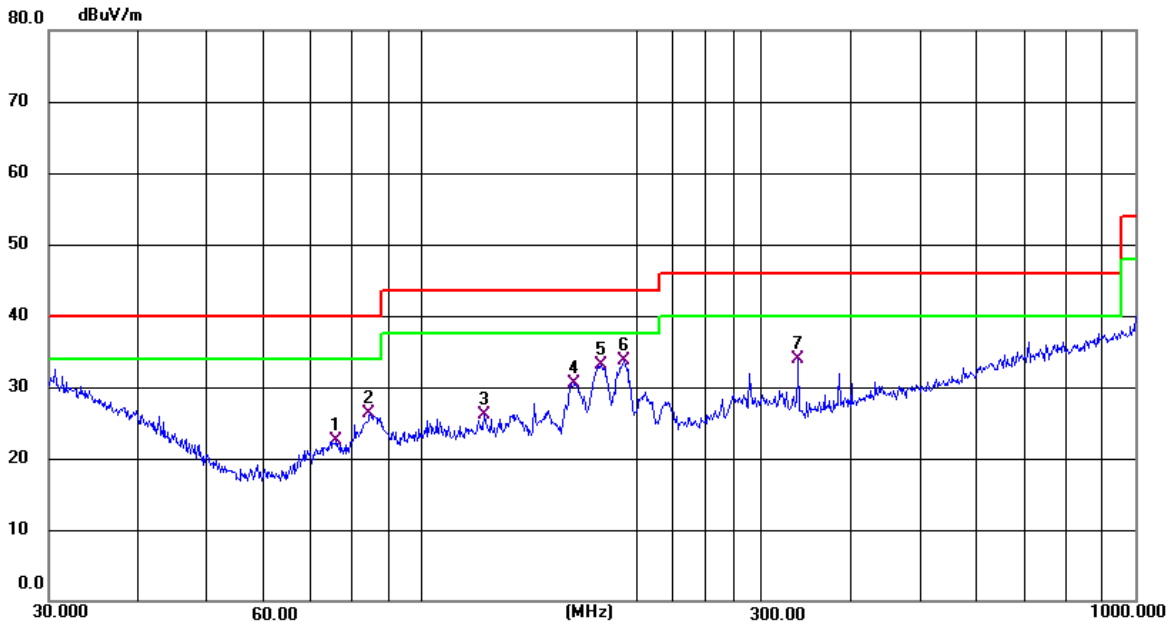

4. BANDWIDTH TEST

4.1TEST PROCEDURE

1). The transmitter output (antenna port) was connected to the spectrum analyzer in peak mode.
2). 20dB Bandwidth the resolution bandwidth of 300 Hz and the video bandwidth of 1 kHz were used.
3). Measured the spectrum width with power higher than 20dB below carrier.

4.2TEST SETUP

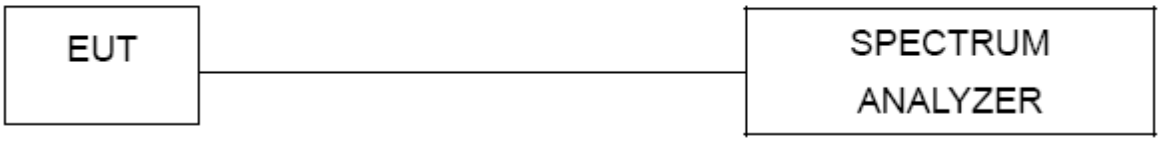

4.3 TEST RESULT

EUT:	Wireless Charging Pad	Model Name. :	UAG-WCP-01
Temperature:	24℃	Relative Humidity:	54%
Pressure:	1010hPa	Test Mode :	Mode 1
Test Power :	AC 120V/60Hz		

-20dB Bandwidth-a single frequency(Hz)	F_L (kHz)	F_H (kHz)
781	120.575	121.356

a single frequency

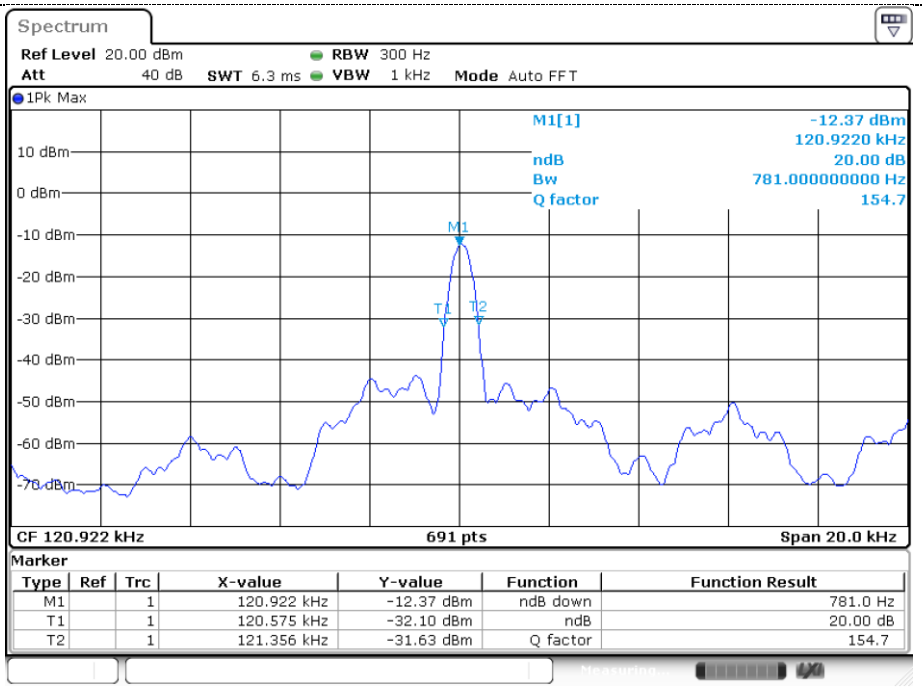

5. ANTENNA APPLICATION

5.1 Antenna Requirement

15.203 requirement: For intentional device, according to 15.203: an intentional radiator shallbe designed to ensure that no antenna other than that furnished by the responsible partyshall be used with the device.

5.2 Result

The EUT antenna ispermanent attached antenna. It comply with the standard requirement.

END REPORT