5 in 1 Wireless Charging Station

User Manual

Magnetic Wireless Chaging Stand for iphone 12/13 Series Only

Product Introduction

This is a multifunctional 5 in 1 magnetic wireless charging station that can fast magnet charge your for iphone 12/13 series and simultaneously boosts up the Apple watch 1/2/3/4/5/6/7, Airpods Pro/2, and supported all Qi-enabled devices.

In addition, we also designed with nightlight and USB output , which frees you from daily plug and pull hassles, let the wireless devices guides you to an easier life.

The product is designed with the magnetic double coil , you could place the phone vertically or horizontally without affecting charging , and watch your favorite TV show , movies while charging.

Product Details

1. Requires Type C & QC 3.0 fast charging adapter when charging 3 devices with nigh lamp simultaneously or want to have a fast charging effect. We recommend that the input power must supply up to 18W, otherwise it my cause multiple devices charging insufficient or unstable.

2. The base if wireless charging station provide up to 15W fast charging , USB output provide up 10W (max), all qi enabled magnetic phone charging supports 5W/7.5W/10W/15W. However, 7.5W standard for iPhone12/13 series and 3W stander for Apple watch.

3.The night lamp supports 3-level of brightness adjustable by touch control, short single touch turn on the light , and then from neutral light , warm light and more warmer light and off 4 states cycled. The fourth press to turn off night lamp.

4.Only compatible with magnetic enabled cases for magnetic attachment to charge wirelessly.

Product Specification

Model No	YM-UD23
Product material	ABS+Zinc alloy
Input interface	Type-C
Input	PD/QC3.0/9V-4A/12V-2.5A
USB output	5V-2A
Phone wireless output	5W/7.5W/10W/15W
Watch wireless output	3W
Earphone wireless output	5W
Conversion efficiency	<80%
Transmission distance	<5mm
Product Size	175*85*130mm

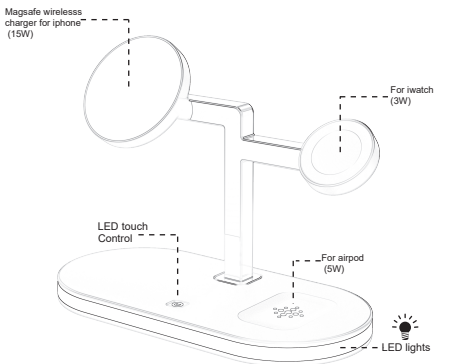

Safety Tips

Please read the instructions carefully before using the product, so that it can be used correctly and store properly.

1. Do not disassemble the product or change the actual use of the product without authorization.

2. Keep away from water or other liquids which may lead to short circuit when using the products.

3. Please use the product in the temperature range of -10℃ -45℃. Do not use the product near the fire source or under sunlight.

4. For safety , please place the product away from children.

5. Please do not place magnetic cards, magnetic stripe media, and precision machinery too close to the device. Not for the Otterbox Commuter case.

FCC Information
This device complies with Part 15 of the FCC rules. Operation is subject to the following two conditions: 1) this device may not cause harmful interference, and 2) this device must accept any interference received, including interference that may cause undesired operation.
Note: This equipment has been tested and found to comply with the limits for a Class B digital device, pursuant to part 15 of the FCC Rules. These limits are designed to provide reasonable protection against harmful interference in a residential installation.
This equipment generates uses and can radiate radio frequency energy and, if not installed and used in accordance with the instructions, may cause harmful interference to radio communications. However, there is no guarantee that interference will not occur in particular installation. If this equipment does cause
harmful interference to radio or television reception, which can be determined by turning the equipment off and on, the user is encouraged to try to correct the interference by one or more of the following measures:
--Reorient or relocate the receiving antenna.
--Increase the separation between the equipment and receiver.
--Connect the equipment into an outlet on a circuit different from that to which the receiver is connected.
--Consult the dealer or an experienced radio/TV technician for help.
Changes or modifications not expressly approved by the party responsible for compliance could void the user’s authority to operate the equipment.
Radiation Exposure Statement
This device complies with FCC RF radiation exposure limits set forth for an uncontrolled environment. This transmitter must not be co-located or operating in conjunction with any other antenna or transmitter. During the operation of device a distance of 15 cm surrounding the device and 20 cm above the top surface of the device must be respected.

CE FC RoHS

Made in China

5 in1ワイヤレス充電スタンド

取扱説明書

製品説明

当商品は多機能の3in 1磁気ワイヤレス充電ステーションで、iphone13シリーズ/iphone12シリーズを高速でマグネット充電し、同時にApple Watch 1/2/3/4/5/6/7、Airpods Pro / 2、およびすべてのQiデバイスを対応可能です。

さらに、常夜灯とUSB出力を使用して設計されているため、毎日のプラグアンドプルの手間が省け、ワイヤレスデバイスでより簡単な生活を送ることが実現できます。

製品は磁気ダブルコイルで設計されており、充電に影響を与えることなく電話を垂直または水平に配置し、充電しながらお気に入りのテレビ番組や映画を見ることができます。

製品詳細

◆ランプで3台のデバイスを同時に充電する場合、または急速充電効果が必要な場合は、タイプCおよびQC3.0急速充電アダプターが必要です。入力電力は最大18Wを供給することをお勧めします。そうしないと、複数のデバイスの充電が不十分または不安定になる可能性があります。

◆ワイヤレス充電ステーションが最大15Wの急速充電を提供し、 USB出力が最大10W（最大）を提供する、すべてのQI磁気対応化可能。携帯の5W / 7W / 10 / W / 12Wをサポートします。ただしiphoneが7.5w、iwatchシリーズは3wを標準とします。

◆ナイトランプは、オーチコントロール、ライトの短いシングルタッチタム、および調整可能な3レベルの明るさをサポートできます。常夜灯を消すための4回目をプレスする。ニュートラルライト、ウォームライト、よりウォームライト、オフ4つの状態があります。

◆ワイヤレスで充電するための磁気アタッチメント用の磁気対応ケースとのみ互換性があります。

製品仕様

モードNo	YM-UD23
材質	ABS+Zinc alloy
入力インターフェース	Type-C
入力	PD/QC3.0/9V-4A/12V-2.5A
USB出力	5V-2A
携帯ワイヤレス出力	5W/7.5W/10W/15W
ウォッチワイヤレス出力	3W
イヤホンワイヤレス出力	5W
変換効率	<80%

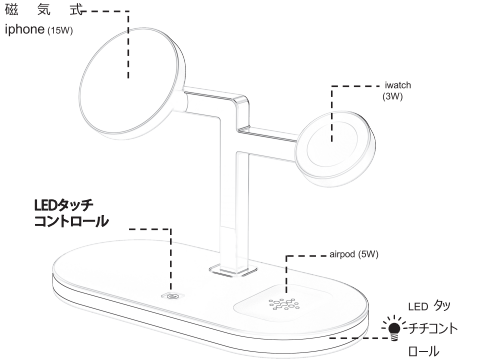

注意事項

製品を使用する前に、製品説明ををきちんとお読みください。.

●本製品を分解・改造・加工しない

●適合機種以外の接続機器には使用しない

●-10℃～45℃の温度範囲でご使用ください。

イヤホンワイヤレス出力5W火元の近くや直射日光の当たる場所で使用しないでください。

●ぐらついた台の上や傾いた場所など不安定な場所、振動の多い場所に置かない

●磁気カード、磁気ストリップメディア、および精密機械をデバイスに近づけすぎないでください。 外箱、通勤用ケースには使用しないでください。

●異物を載せないや熱に気を付けること

●炎天下や降雪時の戸外等、45度以上の高温、10度以下の低温となる場所、直射日光のあたる場所、湿気の多い場所でのご使用や保管しない。

●乳幼児の手の届かないところに保管してください

●ほこりの多い場所に置かない

●スマートフォンのカバーに、交通カードや磁気カードなどを差し込んだまま充電せず

CE FC RoHS

Made in China