Product Introduction Manual

Model NO: L2301

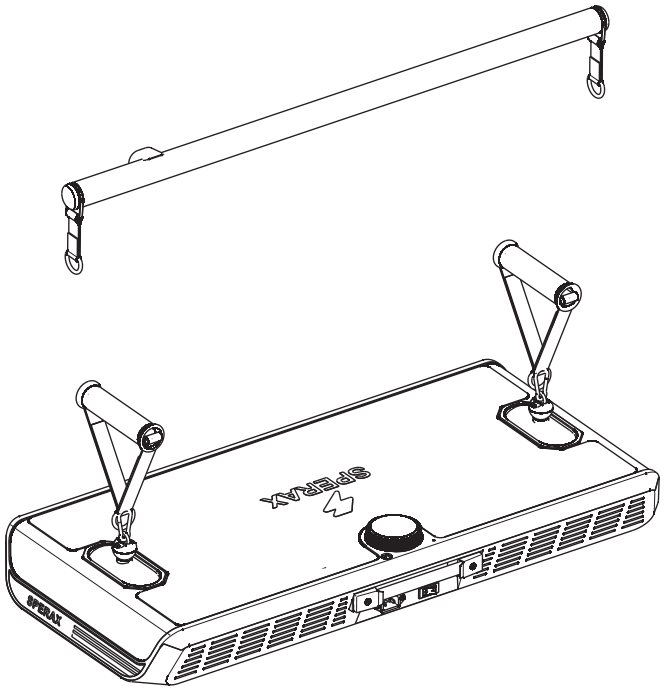

Please read the instructions carefully before using.

Catalogue

1. Safety Precautions----------02

2. Product Introduction ----------04

3. Operation Instructions----------06

4. Control Instructions ----------07

5. Operation Precautions----------09

6. Performance Pledge----------10

1. Safety Precautions

Dear users, thank you for purchasing the power station product. Correct use of the product is the guarantee of safe exercise. To ensure the personal safety of you and your family during exercise, please read this manual carefully before using the power station and strictly follow the instructions when using it.

(1)User related

1. Please wear suitable sports shoes and clothing when using this equipment, and perform appropriate warm-up exercises first.
2. If you feel any discomfort or any abnormality in your body during use, please stop exercising immediately and consult a doctor.
3. We do not recommend the use of power station for elderly people over 65 years old, people preparing for pregnancy, pregnant women, lactating mothers, those who have had surgery within 6 months, those with heart disease, high blood pressure, asthma and other diseases that prohibit strenuous exercise, and other strenuous activities not recommended according to medical advice. If you are using it, please stop using it immediately.
4. It is strictly prohibited to drink alcoholic beverages and any stimulant products prohibited by national laws and regulations before and after use.
5. Fatigue, improper use of the operation method and excessive exercise can lead to your injury. You should accurately judge your physical condition and endurance before exercising, and ensure that the exercise actions, intensity, and duration are appropriate.
6. When using the power station, please keep children and pets away from the power station to avoid danger.
7. Minors must use the device under the supervision and guidance of their guardians and must not use it alone.
8. When operators with long hair use this device, it is recommended that their hair be tied up or tied up to prevent hair from accidentally falling into gaps in the device.
9. In winter, keep a certain humidity in the room to avoid static electricity generated by rabbits. Static electricity may interfere with the operation of the equipment and even cause the equipment fabric to easily generate static electricity. Avoid wearing chemical fiber clothing when using this equipment.

(2)Equipment and Usage Environment Related

1. The power station is an indoor sports equipment and should not be used outdoors.
2. When using a power station, ensure that the power station is in a safe and open space of at least 2m x 2m.
3. The power station should be placed away from water sources, heat sources and flammable and explosive materials.
4. The power station is a special equipment for sports. Please do not disassemble it at will or modify it for other purposes to avoid potential safety hazards.

5. Do not splash liquid on the power station and do not place any foreign objects on the power station.
6. Do not insert finger or any foreign object into the gap of the power station to avoid danger.
7. Do not touch the power cable, power socket, or power switch with wet hands.
8. Do not use a power cord or plug that is damaged or has water on it. If the power cord of the power station is damaged, you must consult after-sales service personnel or personnel with relevant professional qualifications for replacement to avoid injury.
9. After use, please turn off the power station in time and unplug it.
10. When cleaning the machine, you must unplug the power cord and wipe it with a clean, non-drip soft towel.
11. Power stations should be placed on a clean, flat, hard surface. Do not place soft cushions such as blankets or yoga mats under the equipment.
12. This product is only suitable for home use and is not suitable for commercial scenarios (such as gyms, etc.).
13. Please use it with the power cord that comes with the power station. Do not use other power cords for power supply.
14. The power plug must be reliably grounded, and try to avoid using other electrical appliances on the same power supply line. Please do not use power cords or plugs that are damaged or stained with water. The power cord of the power station is dedicated. If damaged, it must be replaced by the manufacturer, service center or personnel with relevant professional qualifications to avoid injury.
15. Please stand in the training area for training and avoid placing your body's center of gravity outside the equipment to avoid tipping.
16. Confirm whether the socket is well grounded: Use a digital multimeter to adjust to the AC setting to measure the voltage of the zero fire and ground wires. Generally, the three-hole plug has zero on the left and fire on the right and ground on the right. Measure the voltage difference between the live wire and the neutral wire, and the live wire and the ground wire respectively. If the fire-ground voltage difference is equal to the fire-zero voltage difference or slightly higher (5V), it means the grounding is good; if it is zero, it means the ground wire is open; if the voltage is less than the fire-zero voltage difference, it means the grounding is not solid and there is grounding resistance.
17. Confirm whether the ground wire connection of the equipment is good: use a digital multimeter to adjust to the short circuit setting, touch the red test lead to the ground wire of the power station, and the black test lead to the iron frame of the power station. Listen to see if there is a buzzing sound. If there is a buzzing sound, it means that the grounding is good, if not, it means that there is a problem with the equipment grounding.
18. Confirm whether the voltage of the zero-fire-ground wire of the socket is normal: Use a digital multimeter to adjust to the AC setting to measure the zero-fire-ground wire voltage. Generally, the zero-live-wire voltage is 220V, the fire-ground voltage is 220V, and the zero-ground wire is close to zero volts.
19. Do not plug the machine into the grounding short circuit or leakage socket to avoid electric shock.

2. Product introduction

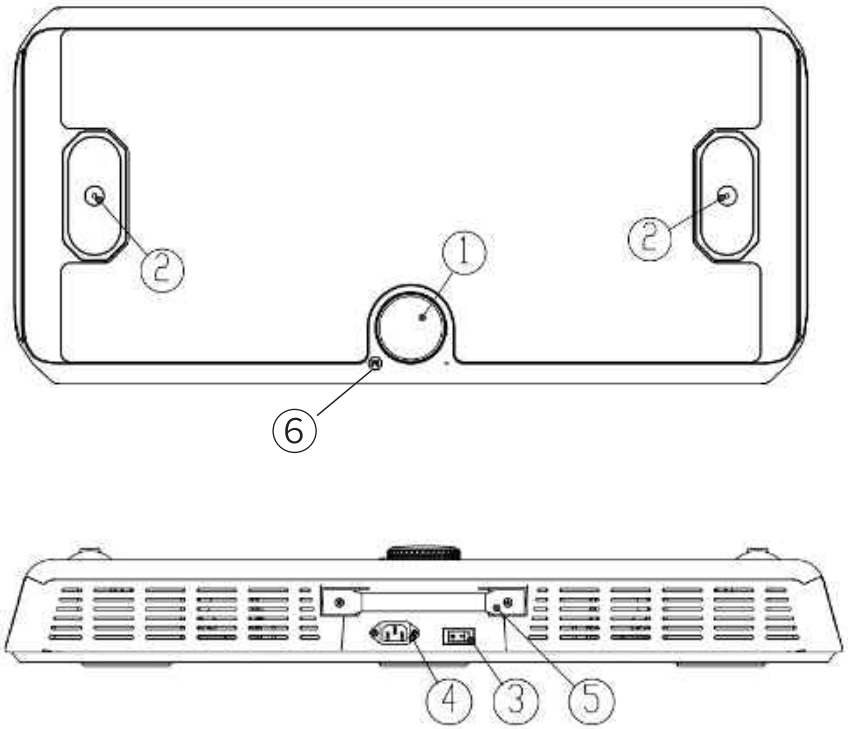

Number	Name	Number	Name
1	Control panel	4	Power cord jack
2	Drawstring buckle	5	Handle
3	Power switch	6	Mode switch button

Product Specification

Product Model	L2301
Product Size（L×W×H）	850 x 400x 120mm
Packing Size （L×W×H）	940× 515x 165mm
N.W	
G.W	
Resistance Range	5.5-66lbs each side
Adjust Step	1lb
Rated Voltage	AC 120V 60Hz
Maximum Load	265lbs
Use humidity	10%~90%

Packing list

① Power station host

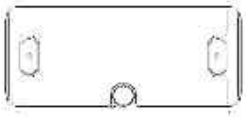

② Long pole

③ Grip

④ Power cord

⑤ Wireless switch

⑥ Accessory connection buckle

⑦ Product Manual

3. Operation Instructions

(1). Preparation before use

①. The power station needs to be powered on for use. Please do not pull out the rope before it is powered on, otherwise the rope will not be retracted. If the rope is accidentally pulled out without power, please turn on the power station. After powering on, the rope will will be automatically withdrawn.

②. When using the power station, do not leave the training area to avoid the equipment being pulled off the ground, resulting in safety risks.

(2).Turn on and off

①. Insert the power cord into the power socket on the side of the power station. After plugging it in, press the power switch downward to turn on the power station;
The power switch "--" is to start the power supply, and "O" is to shut down the power.

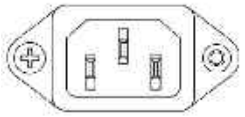

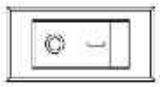

②. After pressing the power switch, there is 3 seconds of safety protection power time, after which the device will start to respond, during this period, please do not repeatedly press the power switch.

4. Control Instructions

(1)Resistance Adjustment

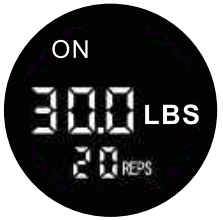

Working interface

Stopping interface

The knob cannot switch modes when the interface is working, and the mode can only be adjusted when the interface is stopped; but when adjusting parameters, parameters can be adjusted regardless of working or stopping.

REPS： Indicates the total number of times of exercise

M： Indicates the sequence number of the mode

Power Station main functions list:

Main Function	Support or not	Remark
1 . Power settings	Yes	5 power modes switching
2.Number of exercises	Yes	
3.Voice broadcast	Yes	When playing Bluetooth music, there is a voice broadcast, priority to play the prompt voice.
4.Bluetooth music	Yes	
5.LED display	Yes	
6.Wireless switch	Yes	It can be paired with 5 wireless switches

1. In the Power Station control panel, you can perform resistance start/stop, resistance adjustment, mode adjustment (M button).
2. You can adjust the resistance by turning the knob to the right to increase and to the left to decrease.
3. After adjusting to the power you need, press the center knob and the power station will start.
4. After the power station is started, the resistance can still be adjusted by turning the knob.
5. When the power station is started, press the knob, the power station will stop working, and the resistance value will return to zero.

(2)Mode Swich

1. The M button next to the knob is designed to change the mode. We have defined modes in the table as below:

Display mode	“1”	“2”	“3”	“4”	“5”
Power Station Mode	Standard Mode	Centrifugal Mode	Isokinetic Mode	Elastic Mode	Rowing Mode
Function Description	Through the upper computer to control the motor pull rope force and return rope force Constant force state: rope pulling force = rope back force	Rope output torque < Rope pulling torque; Centrifugal mode means higher weight when the rope is returned, lower weight when the rope is pulled and the weight is set to be the weight during the centrifugal stage when the rope is returned	Use more force against the exerciser and keep the exit speed constant.	Simulating the spring tension, the longer the rope, the greater the output force, until the maximum output of 66lbs	The torque increases as the speed and rope length increase, and the overall performance simulates the rowing action.In rowing mode, the resistance is fluid resistance, and the pull power station feels similar to the water/wind resistance rowing machine, which has the following two characteristics:The initial resistance is fixed, but the faster the pulling speed, the greater the resistance; If you adjust different gears, even if the pulling speed is the same, the resistance will be different; The resistance in the return phase is very small and is a fixed value.In elastic mode, the adjustable parameters are: The resistance level is equivalent to the damping of the traditional rowing machine, and the larger the number, the greater the resistance of the whole process;The initial weight is the initial resistance of the first pull out of the rope.
	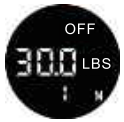				

2.The middle displays adjustable parameters for each mode, such as kilograms or coefficients.

Mode	Standard Mode	Centrifugal Mode	Isokinetic Mode	Elastic Mode	Rowing Mode
Parameter Range	5.5-66lbs	5.5-66lbs	1-10	1-11	5.5-66lbs

3.Button Function:

Button	Knob	Start-stop	M Button (mode switching)
Function	Used to adjust the configurable parameters in each mode, regardless of running or stopping, the setting is valid.	Used to start/stop tension, when the start of the lamp ring rotation, when the stop of the lamp ring off, and report the status voice.	For switching modes, a total of 5 modes, click cycle switch, and report mode voice.

5. Operation Precautions:

1. Voice broadcast: when starting and stopping, switching modes, pairing remote control will play the corresponding voice prompt result; When the parameter setting is too large, it will also announce the voice warning for safety.
2. Wireless switch long press the remote control within 5 seconds of starting, you can pair a new remote control, up to 5 wireless switches can be matched (red), wireless switch function can only control start and stop.
3. Please use phone to connect Bluetooth device named Freepi. The Bluetooth connection is indicated by the Bluetooth icon, and the voice is broadcast at the same time.
4. When the cable is not smooth due to unpredictable reasons (sudden power failure, etc.), disconnect the power supply and pull out the cable as far as possible. Next, switch on the power and tighten the wire with your hand, so that the motor can return to the line slowly and smoothly.
5. The motor of this product has an overheating protection program. When the product detects that the motor or drive temperature reaches 120°, it will trigger the force reduction protection, which will generally reduce the force to the base force.

6.Performance Pledge

Power station, within a year of normal use, such as non-human damage, can provide users with free parts, after the expiration of the warranty, the price of spare parts is superior.
If your products have after-sales problems, please call dealers around after-sales service!

Under any of the following circumstances, we will not be responsible for free warranty:

A. Product damage caused by violation of the product instruction manual
B. Hardware damage caused by improper assembly
C. Product damage caused by unauthorized modification or self-repair
D. Product damage caused by exceeding the permitted use or storage environment
E. Product damage caused by abnormal external force
F. Product damage caused by natural disasters or other force majeure
G. Unable to provide this warranty card and valid proof of purchase
H. Tear off or damage the disassembly label without permission
I. Other situations that do not fall within the scope of free warranty

★ **The above warranty instructions may change at any time. For the latest warranty policy, please refer to the "Service Policy" on the official website.**

(!) Please seek qualified service personnel for all maintenance services. When the equipment fails, please call customer service directly to report for repair. It is prohibited to dismantle the equipment for repair without permission.

FCC Warning
This device complies with part 15 of the FCC Rules. Operation is subject to the following two
conditions: (1) This device may not cause harmful interference, and (2) this device must accept any
interference received, including interference that may cause undesired operation.

Note: This equipment has been tested and found to comply with the limits for a Class B digital device, pursuant to part 15 of the FCC Rules. These limits are designed to provide reasonable protection
against harmful interference in a residential installation. This equipment generates, uses and can
radiate radio frequency energy and, if not installed and used in accordance with the instructions, may cause harmful interference to radio communications. However, there is no guarantee that interference will not occur in a particular installation. If this equipment does cause harmful interference to radio or television reception, which
can be determined by turning the equipment off and on, the user is encouraged to try to correct the
interference by one or more of the following measures:
—Reorient or relocate the receiving antenna.
—Increase the separation between the equipment and receiver.
—Connect the equipment into an outlet on a circuit different from that to which the receiver is
connected.
—Consult the dealer or an experienced radio/TV technician for help.

Note: The Grantee is not responsible for any changes or modifications not expressly approved by the party responsible for compliance. such modifications could void the user's authority to operate the
equipment.

The device has been evaluated to meet general RF exposure requirement.
To maintain compliance with FCC's RF exposure guidelines, the distance must be at least 20 cm
between the radiator and your body, and fully supported by the operating and installation

IC Warning
This device complies with Industry Canada license-exempt RSS standard (s). Operation is subject to the following two conditions:
(1) this device may not cause interference, and (2) this device must accept any
interference, including interference that may cause undesired operation of the device.
Le present appareil est conforme aux CNR d"industrie Canada applicables aux appareils
radio exempts de licence.
L'exploitation est autorisee aux deux conditions suivantes :
(1) l'appareil ne doit pas produire de brouillage, et (2)l' utilisateur de l' appareil doit
accepter tout brouillage radioelectrique subi, meme si le brouillage est susceptible d'en
compromettre le fonctionnement.
CAN ICES-003(B) / NMB-003(B)
The device has been evaluated to meet general RF exposure requirement.
To maintaincompliance withRSS-102-Radio Frequency (RF) Exposure guidelines,
this equipment shouldbe installed and operated with a minimum distance of 20cm between the radiator and your body.
le dispositif de a ete evalue a repondre general rf exposition exigence. pour maintenir
laconformite avec les directives d'exposition du RSS-102-Radio Frequence (RF).ce
materiel doitetre installe et exploite a une distance minimale de 20 cm entre le radiateur et votre corps.