Product
Instruction Manual

Model NO:T4015

Please read the instructions carefully before using

Table of contents

1. Safety Precautions & Warning Instructions ----------2

2. Product Introductions----------6

3. Installation Procedure----------8

4. Sports Advice and Guidelines----------11

5. Operating Instructions----------13

6. Common Failures and Troubleshooting----------15

7. Product Maintenance----------16

8. Service Commitment----------17

1. Safety Precautions & Warning Instructions

1. Please consider your physical condition and properly and regularly train to ensure that you have enough physical strength for training when starting training with this product. Mistakes or excessive training will not benefit our health.
2. This product is not suitable for children. Do not use if you feel unwell physically or mentally unless they are under the supervision or direction of a person responsible for their safety regarding the use of the product. Children should be monitored to make sure they do not play with equipment.
3. This product is suitable for family use, is not suitable for professional training and testing, and cannot be used for medical purposes.
4. The heart rate display site of this product provides clinical date.
5. If the power cod is damaged, it must be replaced by the manufacturer or professional maintenance personnel to avoid danger.
6. Please check all parts before use to ensure that screws and nuts are locked.
7. Please wear comfortable tight clothes to avoid the clothes being hung by the machine. Don’t let children or pets play around in case of accidents.
8. Please put the product on a smooth, clean and flat ground. Make sure there is no sharp objects nearby. Keep away from water and heat sources.
9. Keep your hands away from all moving parts. Do not put your hands and feet in the gap under the running belt.
10. This product is only for one person at run time.
11. Make sure screws and bolts are tightened after assembly
12. Please use the accessories provided by the original factory, Rigorous private replacement.
13. This product is HC grade, with a maximum weight of 100kg.
14. WARNING: That the folded treadmill should not be operated.
15. WARNING: Allow the runing surface come to a complete stop before folding.

Warning: Please read and observe the following precautions in order to reduce accidents or injuries.

Please wear suitable clothing before using the treadmill.
1. Don't wear clothes that can get caught on the treadmill.
2. Do not place the power cord near a hot object.
3. Keep children away from the treadmill.
4. Don't use the treadmill outdoors.
5. The power must be cut off before moving treadmill.
6. Non-professional personnel shall not open the upper guard cover and the left and right rear housing without authorization.
7. This treadmill can only be used in a properly grounded outlet of 20A.
8. Only one person can exercise on the treadmill when the machine starts.
9. Please stop exercising immediately and consult a fitness instructor when you feel dizziness, chest pain, nausea or shortness of breath during exercise.

WARNING! ENFORCEMENT!

Please be sure to discuss with a professional doctor before using if you are receiving medical treatment from a doctor or having the following conditions.
(1) Having back pain now or injury to leg, waist, and neck in the past. Having problems with the leg. (Chronic diseases such as disc herniation, spondylolisthesis, cervical herniation, etc.)
(2) Having deformed arthritis, rheumatism, gout.
(3) Suffering from osteoporosis.
(4) Having circulatory system obstacles (disease of heart, blood-vessel, hypertension).
(5) Having difficulty in breathing.
(6) Using artificial pacemakers or implantable medical electronic devices.
(7) Having malignant tumors.
(8) Having thrombosis or serious dynamic environment tumor, acute environment tumor, and other blood circulation disorders or a variety of skin infections and other symptoms.
(9) Having perceptual disabilities caused by diabetes and high peripheral circulation disorders.
(10) Having skin injuries.
(11) Having a high fever (38°C or above) due to illness and so on.
(12) Having abnormal dorsal bones or crooked dorsal bones.
(13) Having pregnancy or possible pregnancy or menstruation.
(14) Feeling abnormal and having to rest.
(15) Poor physical condition.
(16) Users for rehabilitation purposes.
(17) Feeling uncomfortable in a certain region of the body except under the above circumstances.
— It's likely to cause accidents or poor health.
◆ Please stop using immediately and consult your doctor when you feel pain in your back, numbness in your legs, dizziness, abnormal heartbeats, and other body aches that are different from normal or poor coordination or other abnormal feelings during exercise.
◆ Do not allow children to use or play around the product.
— If instructions are not followed, there may be a risk of injury.
◆ Do not allow children to use or play with the product.
— If instructions are not followed, there may be a risk of injury.
◆ Please make sure no person or pet is around (rear, lower, front) during using or taking out the product.

Forbidden

◆ Do not use in the state of shell cracked, detached (internal structure exposed) or weld detached.
— Otherwise, it's prone to cause accidents or injuries.
◆ Do not jump up or down during exercise.
— Users are prone to fall and get injured.

◆ Do not use or keep in damp places such as outdoors or near the bathroom, or in places where water drops are caught.
◆ Do not use or keep in places with direct sunlight such as high-temperature places around the stove and heating appliances of electric heating carpets.
— Otherwise, it's easy to cause electricity leakage and fire.
◆ Do not use it when the power cord or plug is damaged or the socket is loose.
— Otherwise, it’s easy to cause electric shock, short circuit, and fire.
◆ Do not damage or forcibly bend or twist the power cord. At the same time, do not place heavy objects on it, nor let the line be clamped.
— Otherwise, it's easy to cause fire or electric shock.
◆ Do not use it with two or more people on it at the same time. Do not let people around get close when using.
— Otherwise, it's easy to cause accidents and injuries from falls.
◆ Do not use it if you can't express consciousness by yourself or operation.
— It's likely to incur an accident or injury.

Do not disassemble the treadmill.

◆ Disassembly and repair are strictly prohibited.
— There is a risk of injury due to mechanical failure.

Avoid contacting with water.

◆ Do not spray water or other conductive liquid on the main body or operation parts.
— It may cause electric shock and fire.

Prohibition

◆ People who don't usually exercise shouldn’t suddenly do strenuous exercise.
◆ Do not use after eating or when you are tired, especially after exercising or when you are in an abnormal physical state.
— It may cause damage to health.
◆ This product is suitable for home use, do not use in the school, the gymnasium, and so on, or for non-specific users.
— There would be an injury risk.
◆ Do not use it when eating, drinking, or doing other activities.
◆ Do not use it after drinking until you feel sluggish.
— it's easy to cause an accident or injury.
◆ Do not use it with hard or sharp objects in your pants pocket.
— it's easy to cause an accident or injury
◆ Do not use the power plug with needles, garbage, or water nearby.
— It may cause electric shock, short circuit, and fire.
◆ Do not pull out the power plug or switch the power switch to "off" during use.
— It may cause injury.

Never use it with wet hands.

◆ Do not pull out or insert the power plug with wet hands.
— It's likely to cause electric shock or injury.

Pull out the power plug.

◆ Please pull out the power plug from the socket when you don't use it.
— Dust and moisture make it into insulation deterioration, therefore, leading to electricity leakage and fire.
◆ Please be sure to pull the power plug from the socket during maintenance.
— Failure to comply may result in electric shock or injury.
◆ Please stop using it if the device does not start or run normally. Immediately pull out the power plug and entrust it into inspection and repair.
— Failure to comply may result in electric shock or injury.
◆ Pull out the power plug immediately in case of power failure.
— Otherwise, it's likely to incur accidents or injuries when power is restored.
◆ Do not hold the cable tight when pulling out the plug, hold the power plug.
— Otherwise, it may cause a short circuit, electric shock, and fire.

Grounding Instructions

◆ The product must be grounded. Grounding provides the channel with the least resistance to current to minimize the risk of electric shock if the function of this machine does not work normally.
◆ This product is equipped with a grounded conductor and a plug for the device. The plug must be properly installed, grounded, and plugged into an appropriate electrical outlet in accordance with local codes or regulations.

Dangerous

◆ There is a risk of electric shock if the device is not properly grounded. Please contact an electrician to check if the grounding of the product is correct. If the plug does not fit into the socket, please inform a qualified electrician about the installation of a suitable socket.

◆ This product has a grounding plug. Make sure that the product is connected to an outlet of the same shape. This product can not be used with an adapter socket.

The noise of this product is less than or equal to LpA (75) dB

2. Product Introductions

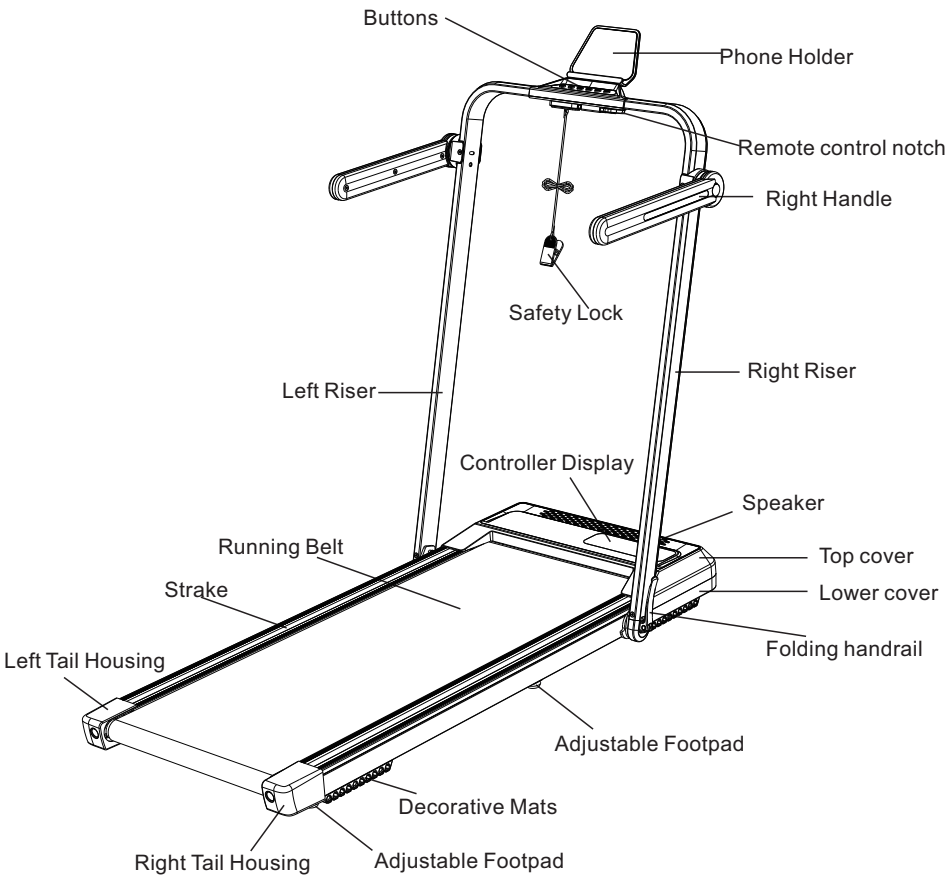

Packing list:

No.	Name	Qty.	Remark
1	Main body	1	
2	Spare parts package	1	See table

Technical Parameters:

Working voltage	AC 110V 60Hz
Max load	100Kg
Folding Size	1409*672*119 mm
Unfolding Size	1238*587*1030 mm
Running area	400*1020 mm
Motor power	0.75HP
Speed	1.0-12.0 km/h
Control method	ElectronicWatch,Remote Control

Spare parts list:

NO.	Name	Qty.	Remark
1	M10 * 40mm Hexagon Socket Cheese Head Bolt	2	Fixed to the back of risers
2	5mm Inner Hexagon Wrench	1	Others
3	6mm Inner Hexagon Wrench	1	Adjust the Running Bel
4	8mm Inner Hexagon Wrench	1	Installation of left and right handrails
5	Foot Pad	1	
6	Socket Wrench	1	
7	Left / Rght Handlebar	Each1	
8	Foot Pad	2	
9	Handle Hole Round Plug	2	
10	Mobile Phone Holde	1	
11	Power Line	1	
12	Remote Control	1	
13	Safety Lock	1	
14	Methyl Silicon Oil	2	
15	Instructions and Qualification	1	

3. Installation Procedure

1. Take the mainframe out of the packing box and place it flat on the carpet or cushion,
As shown in step (A) of the following figure, break the "folding handle" in the direction shown in the figure, and then the lower end of the riser will naturally expand to both sides;
As shown in step (B) below, lift the riser up to the upper limit point;
As shown in step (C) below, press down the "folding handle" to lock the riser.

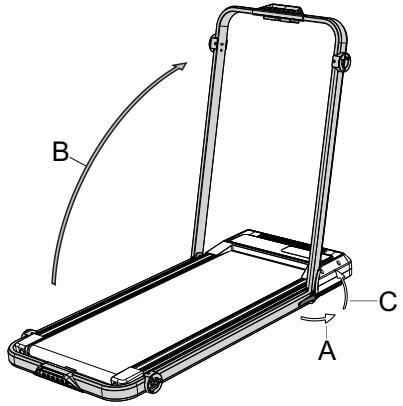

2. Erect the left handlebar (D) as shown in the figure, insert it into the corresponding position of the left column, lock the left handlebar with the column with M10 bolts (E), and fasten the screw hole of the handlebar with a round plug (F). (The installation method of the right handlebar is the same. Please distinguish the left handlebar from the right handlebar during installation); After the left and right handlebars are installed, they can be rotated clockwise or anticlockwise to the limit point to expand or fold the handlebars.

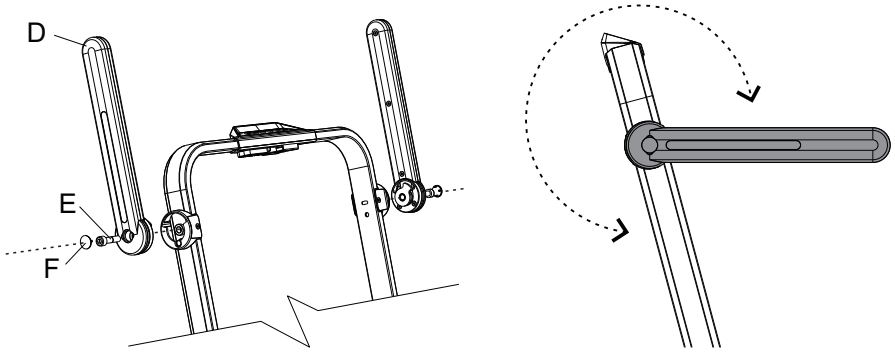

3. As shown in the following steps, insert the mobile phone bracket (G) into the back groove of the key console,The red safety lock (H) is at the yellow position under the suction console. When using the treadmill, one end of the safety lock belt clip needs to be clamped at the edge of the clothes.

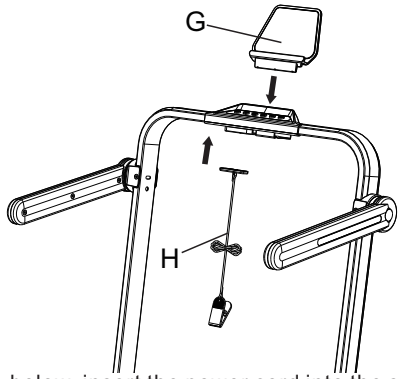

4. As shown in the figure below, insert the power cord into the socket at the front end of the running, switch on the power, turn on the power switch at the bottom of the front end of the machine, and the treadmill enters the standby mode.

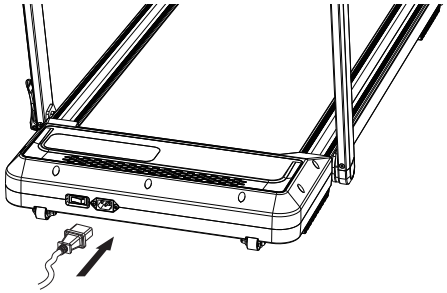

Note: After the machine is assembled, please check again whether all bolts are locked.

5.As shown in the right figure, the remote control can be placed in the slot below the console.

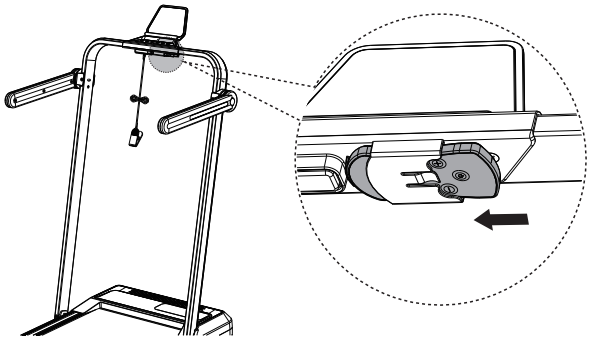

Foot rest Installation and Adjustment

1. Use a packaging material to pad the front end of the treadmill, as shown in the right figure, screw the two foot pads into the screw holes, tighten them clockwise and loosen them counterclockwise.

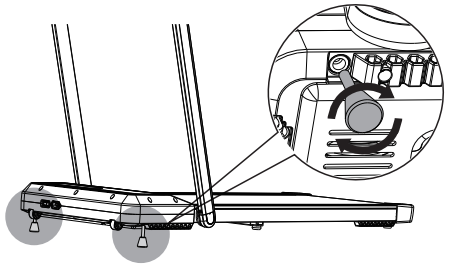

2. Foot pad adjustment: If the ground is uneven or the treadmill shakes, please adjust the six adjustable foot pads at the bottom of the treadmill to appropriate positions, and the foot pads must fit the ground. (As shown in the figure below)

Adjusting the foot pad, the slope of the running platform can be raised or lowered.

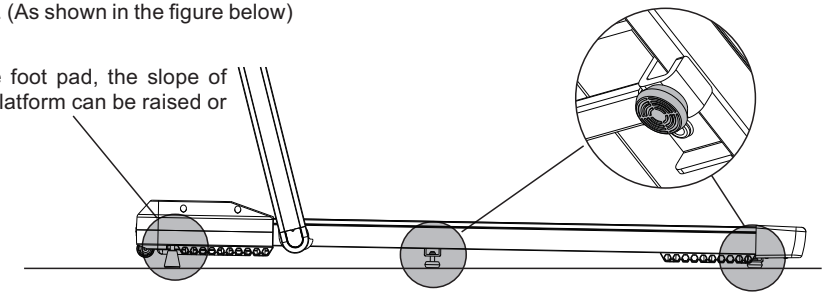

4. Adjustment of folding handle strength

When the machine leaves the factory, the part has been adjusted to a slightly appropriate tension. However, due to the strength of personal wrist, the user can adjust the folding handle appropriately according to his own preference. Do not loosen it too much. If it is too loose, it will lead to shaking caused by excessive gap between the folding part of the riser and the host. As shown in step ① below, pull out the pipe plug at the lower end of the left riser; After the equipped hexagonal wrench and socket wrench are combined into a force saving lever, as shown in step ② of the following figure, insert the end of the hexagonal head of the socket wrench into the lower hole of the left riser and fit it with the hexagon nut, and rotate it clockwise to clamp, otherwise it is slightly loose.he treadmill to appropriate positions, and the foot pads must fit the ground. (As shown in the figure below)

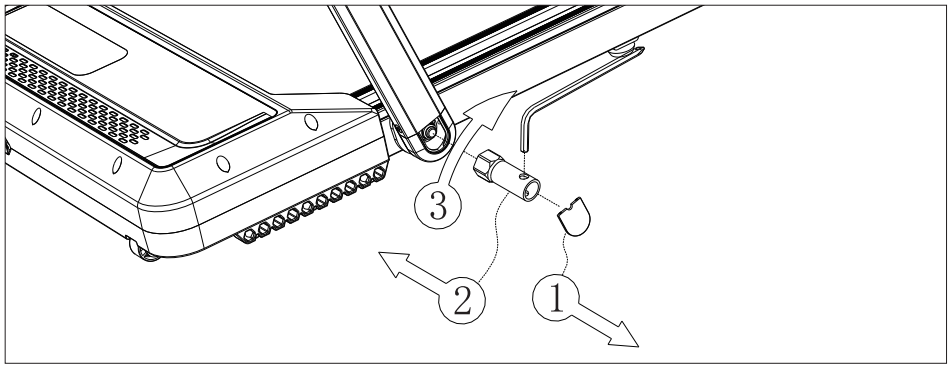

4. Sports Advice and Guidelines

Warm-up exercise
Warm up for 5-10mins before each exercise.

Breathe
Do not hold your breath during exercise. Keep inhaling through the nose and exhaling through the mouth. The breathing should be coordinated with movement. If the breathing is too rapid, the exercise should be stopped immediately.

Frequency
Each exercise of one muscle area should rest for 48 hours in between. That is to say , we suggest you train the same muscle area every other day.

Load
Determine the amount of training according to the user's own physical condition, and then practice according to asymptotic load. It is common phenomenon for muscle soreness at the beginning of training. As long as continuing practicing, the soreness can be eliminated.

Relax
The relaxation should be done for Smins after practicing every time. Users should especially stretch certain ministry muscle to avoid long-term condensation and keep muscle flexibility.

Diet
Do not eat at least 1 hour before training and half an hour after training to protect your digest system. Do not drink too much water to avoid increasing burden of heart and kidney.

Stretching Exercise
It is important to stretch before training, no matter how intense the training will be. It is easier to stretch the muscles when they are warm. Warm up by running for 5 to 10 minutes and then stop and stretch 5 times with each for 10 seconds or more on each leg. Continue to stretch even after training. Do it again after your workout.

Stretching Exercise

It is important to stretch before training, no matter how intense the training will be. It is easier to stretch the muscles when they are warm. Warm up by running for 5 to 10 minutes and then stop and stretch 5 times each for 10 seconds or more on each leg. Continue to stretch even after training. Do it again after your workout.

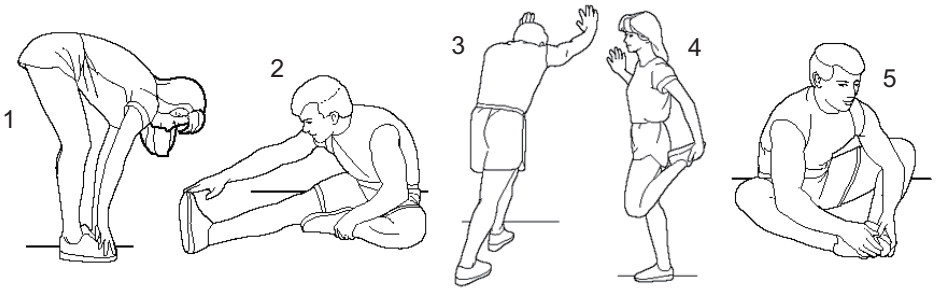

1. Stretch Down
Bend your knees slightly and slowly bend your body to relax your back and shoulders. And try to touch your toes with your hands. Hold for 10-15 seconds, then relax. Repeat three times. (See Figure1)

2. Hamstring Stretch
Sit on a clean seat cushion and straighten one leg. Bring the other leg in close to the inside of the leg.Try to touch your toes with your hands.Hold for 10-15 seconds, then relax. Repeat with each leg for three times. (See Figure 2)

3. Stretch the Calf and Hamstring
Stand with two hands on a wall or tree. One foot is behind. Keep your hind legs straight and on your heels, leaning against a wall or tree. Hold for 10-15 seconds. And then relax. Repeat 3 times for each leg. (See Figure 3)

4. Quadriceps Stretch
Keep balance with left hand to hold the wall or table. Then extend your right hand backward. Hold your right ankle and slowly pulling toward your hips until you feel tension in front of your thighs muscles. Hold for 10-15 seconds, then relax. Repeat 3 times with each leg. (See Figure4)

5. Sartorius Muscle (muscle of the inner thigh) Stretch
Sit with your feet facing each other and knees facing out. Grab both feet with both hands and put toward the groin. Hold for 10-15 seconds. Then relax, repeat 3 times. (See Figure 5)

5.Operating Instructions

Remote control pairing method

1. Turn on the power and check whether the machine is normal.
2. Unplug the safety lock on the treadmill, hold the remote control to aim at the treadmill display window within 10 seconds, and press the " " Start/Stopbutton on the remote control for about 3 seconds. This is the system will have "Didi..." 2 sounds, representing that the remote control and the treadmill have successfully paired and learned, and the treadmill can be controlled by using the remote control normally.

How to use the treadmill

1. Turn on the power and check whether the machine is normal.
2. The machine is equipped with walking mode and running mode. When the riser is folded (the riser is parallel to the running platform), it is walking mode. In walking mode, the running speed of the running belt is 1~6Km. When the riser is deployed, it is running mode. In running mode, the running speed of the running belt is 1~12km.
3. Clip the safety lock onto the sportsman's chest.
4. Before exercise, check whether the stability and function of the treadmill are normal. It is strictly forbidden to start the treadmill from standing on the running belt. Before operation, stand on the sideline, hold the handrail and remote control, and move on the machine after starting up normally. When starting up, grab the armrest with one hand and press the " " button or "Start/Pause" button of the remote control with the other hand. The treadmill starts after a delay of 3 seconds and runs at a speed of 1.0 Km/h. Press "+", and the motor speed will rise to 2.5-3.5Km/h (this is the most comfortable speed for learning to run). Hold the handrail with both hands at the same time, and step onto the running belt with both feet successively, so that the speed will soon be the same as the running belt.
5. After a few minutes, you can speed up your running. Press the "+" button to speed up slowly; You can also press the "-" key to Its speed decreases.
6. You can press the " " key on the remote control or the "Stop" button on the treadmill stops the motor.

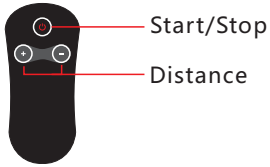

Display Window and Key Description

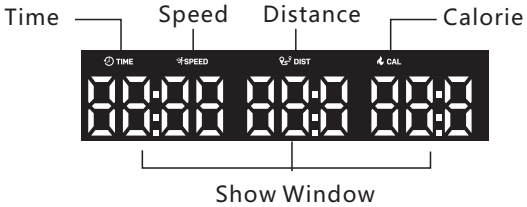

1. LED window displays the following functions:

Three windows display time, speed, distance and calorie data, and time and speed are switched,
Time display range: 0:00-99:59
Speed display range: 1.00-12.00
Distance display range: 0.00-99.9
Calories display range: 0.00-999

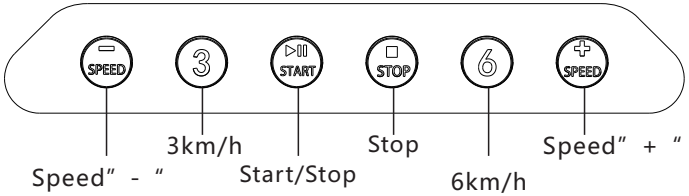

2. Function keys: "Speed -", "3", "Start/Pause", "Stop", "6", "Speed+".

A. Start/pause: Press this key in the stop state to start the motor. Press this key in the running state, and the treadmill slows down and stops running.
B. SPEED -: During operation, pressing this key will slow down the speed.
C. SPEED+: During operation, pressing this key will increase the speed.
D. 3: Speed shortcut key. During operation, press this key to directly reach 3KM/H
E. 6: Speed shortcut key. During operation, press this key to directly reach 6KM/H
F. STOP: Press this key to stop running during running.

Start Instructions:

1. Stick the safety lock to the safety lock position on the panel, turn on the power switch, the buzzer will beep, and the system will enter the standby mode.
2. Press the START button, the window will display a 3-second countdown, and the buzzer will beep once every time it decreases, then the motor will start.
3. The starting speed is 1KM/H. At this time, press the speed+, − keys to adjust the speed.

F. STOP: Press this key to stop running during running.

Bluetooth Connection:

Bluetooth audio connection mode; When the treadmill is powered on and the system enters into standby mode, long press the "-" button for 3 seconds (for models equipped with 433MHZ remote controller, long press the "-" button for 3 seconds after the remote controller is paired successfully), and the system will prompt a "tick" sound, indicating that you can use the phone to set the blue tooth function to search Bluetooth, Click Bluetooth pairing (note: if no Bluetooth pairing is performed within two minutes, Bluetooth will be automatically hidden. If the secondary pairing is required, the above process needs to be repeated). The display of "Connected" indicates that the Bluetooth audio connection is successful.

Bluetooth audio forced disconnection mode; When other Bluetooth devices in the treadmill system are connected to the machine, the user needs to connect the treadmill Bluetooth audio. You can first use the forced disconnection of Bluetooth function to operate. In the treadmill standby mode, long press the "-" button for 3 seconds (for models equipped with 433MHZ remote controller, long press the "-" button of the remote controller for 3 seconds after the remote controller is paired successfully), and the system prompts "tick", It means that the treadmill system is forcibly disconnected from the front connected Bluetooth device. At this time, the user can operate and pair according to the above Bluetooth audio connection method., − keys to adjust the speed.

F. STOP: Press this key to stop running during running.

Safety Lock Function

In any state, pull off the safety lock, and the window will display "E07" fault code. When the treadmill is running, pull the safety lock to stop it. When the safety lock falls off, it cannot be started.

6. Common Failures and Troubleshooting

Please call our dealer or our after-sales service team if you have any other questions.

Questions	Possible Causes	Maintenance Methods
Treadmill does not work.	Not connected.	Insert plug into socket.
	Power is not turned on.	Put the power switch in position "ON".
	Safety lock dropped.	Put the safety lock in the correct position.
	Circuit signal system broken.	Check the controller input terminal and signal circuit.
	Fuse blew out.	Replace the fuse.
The running belt doesn't run smoothly.	Insufficient lubrication.	Add silicone oil lubricant.
	Belt is too tight.	Adjust belt tightness.
Running belt slipped.	Running belt too loose.	Adjust running belt tightness.
	Running belt too tight.	Adjust running belt tightness.

Error messages on electronic meter and elimination methods.

Questions	Possible Causes	Maintenance Methods
E01	Poor connection.	The signal line is not plugged it. Plug it in again.
E02	The motor wire is loose or falling off, or the carbon brush is worn out.	Check whether the motor cable is loose or falling off. If it does not fall off, check whether the carbon brush of the motor is worn out. If it is worn out, replace the motor. If it is not worn out, the electric controller is damaged. Replace the electric controller.
E03	Not detecting signal.	Sensing wire is not plugged in properly. Plug it in again correctly.
E04	Controller or motor not working.	Probeable overload. Replace controller or motor.
E05	Overload protect activated.	Overload. Replace controller.
E06	System self-check failed.	System failure. Replace controller.
E07	Safety lock dropped.	Put the safety lock in the correct position.
Abnormal display	External disturbance.	Turn off power switch,turn on it after one minute.

7. Product Maintenance

1.Lubrication

When the running belt is used for a period of time, it must be lubricated with special methy silicone oil.

Advice:

- ★ 1 hour or less per week lubricate once every 6 months
- ★ Less than 3 hours per week lubricate once every 3 months
- ★ 3-6 hours per week lubricate once every 2 months
- ★ More than 6 hours per week lubricate once a month

Do not lubricate too much. It is not the more lubricants, the better.

Remember: Proper lubrication is an important factor in improving the life of the treadmill.

2. The method to check if you need to add lubricant.

Grab the running belt and touch the middle of the running belt back with your hands as much as possible.You don't need to add lubricant if you have silicone on your hand (a little damp). You have to add lubricant if the pad is dry and there is no silicone on your hand.

- ★ The step of lubricating on the running plate (as shown in the right picture).
- ★ Stop running and fold the machine.
- ★ Lift the running belt of the underside of the main body, and put the oil pot as far as possible into the middle of the running belt. And spray methyl silicone oil inside the running belt and all the contacting area.
- ★ You can keep the treadmill running in speed of 1km/h to evenly lubricate then step on the running belt from left to right. After a few minutes, the methyl silicone oil can be completely absorbed by the running belt.

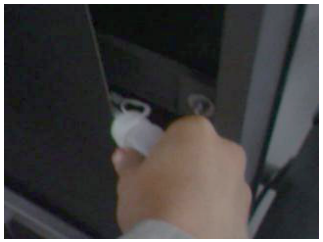

3. Adjust tightness of running belt. All treadmills shall be adjusted for tightness before delivery and after installation. However, the running belt may be loosened after a period of use.

For example, the treadmill would have stopping and slipping problem during exercise. Adjust bolts of running belt with the left and right synchronous as per clockwise direction to half a circle as the unit when this phenomenon occurs.The user might slip if the running belt is too loose.

But it is not good to be too tight. It is easy to increase the load of the motor therefore damage the motor, running belt and roller, etc.

4. Running Belt Deviation Adjustment

All treadmills need to be adjusted with the running belt before delivery and after installation.But the running belt may be deviated after a period of use which may be caused by the following reasons.

①The main body is not placed smoothly.
②The feet of users are not in the center of the running belt.
③The user runs with uneven force between the feet.

It will return to normal after a few minutes of no-load rotation if the deviation is caused due to the wrong usage. It should be adjusted with a 6mm wrench at a half circle as the unit for deviation of non recover automatically.

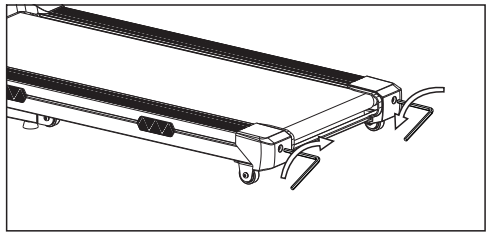

Please adjust the left bolt clockwise or right bolt counterclockwise if the running belt is left deviation.

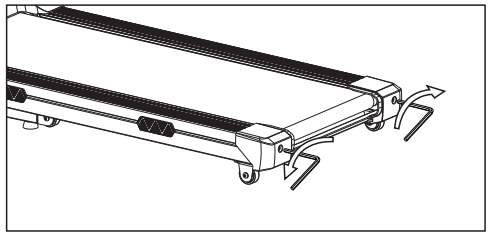

Please adjust the right bolt clockwise or left bolt counterclockwise if the running belt is right deviation.

Note: The running belt deviation is not within the scope of the warranty. And it is mainly maintained by the user according to the manual. Running belt deviation will seriously damage the running belt. The mistake must be detected in time and corrected.

8. Service Commitment

We provide statutory warranty service in the country where you purchased the product. Regulatory compliance and, full-text Supplier DoC areis available on the official website. Please check out our official website to learn more: www.mobvoi.com/products
Please contact us if you experience any problems. Customer service: support@mobvoi.com
The limited warranty applies to the T4011 G4011 electric treadmill. Within the warranty period of normal use, such as non-human damage, Mobvoi can provide users with free accessories. After the expiration of the warranty period, preferential prices for spare parts may be offered to previous buyers.
Manufacturer: Jiangxi EQi Industrial Co., Ltd

This manual is for reference only, please refer to the actual product!

FCC Caution:

This device complies with part 15 of the FCC Rules. Operation is subject to the following two conditions: (1) This device may not cause harmful interference, and (2) this device must accept any interference received, including interference that may cause undesired operation.
Any Changes or modifications not expressly approved by the party responsible for' compliance could void the user's authority to operate the equipment.
Note: This equipment has been tested and found to comply with the limits for a Class B digital device, pursuant to part 15 of the FCC Rules. These limits are designed to provide reasonable protection against harmful interference in a residential installation. This equipment generates uses and can radiate radio frequency energy and, if not installed and used in accordance with the instructions, may cause harmful interference to radio communications. However, there is no guarantee that interference will not occur in a particular installation. If this equipment does cause harmful interference to radio or television reception, which can be determined by turning the equipment off and on, the user is encouraged to try to correct the interference by one or more of the' following measures:

-Reorient or relocate the receiving antenna.
-Increase the separation between the equipment and receiver.
-Connect the equipment into an outlet on a circuit different from that to which the' receiver is connected.
-Consult the dealer or an experienced radio/TV technician for help.
To maintain compliance with FCC's RF Exposure guidelines, This equipment should be installed and operated with minimum distance between 20cm the radiator your body: Use only the supplied antenna.

IC Caution:

This device complies with Industry Canada's licence-exempt RSSs. Operation is subject to the following two conditions:
(1) This device may not cause interference; and
(2) This device must accept any interference, including interference that may cause undesired operation of the device.
-To maintain compliance with RF exposure guidelines, this equipment should be installed and operated with a minimum distance of 20cm between the radiator and your body.

Le présent appareil est conforme aux CNR d'Industrie Canada applicables aux apparei ls radio exempts de licence. L'exploitation est autorisée aux deux conditions suivantes:
(1) l'appareil ne doit pas produire de brouillage, et
(2) l'utilisateur de l'appareil doit accepter tout brouillage radioélectrique subi, même si le brouillage est susceptible d'en compromettre le fonctionnement.

Pour maintenir la conformité aux directives d'exposition aux radiofréquences, cet équipement doit être installé et utilisé avec une distance minimale de 20 cm entre le radiateur et votre corps.