Official Website
https://uswellfit.com/

TREADMILL

Under Desk Walking Pad

Model: WFTM004

USER MANUAL

***Thank you for selecting treadmill. To provide a better using experience, please read this manual carefully before operation or maintenance, and SAVE THESE INSTRUCTIONS for future reference.**

Contents

1. Customer Support 1

2. Important Precautions 2

3. Product Introduction 3

3.1. Product Diagram 3

3.2. Console Diagram 4

3.3. Package Contents 6

3.4. Specifications 6

4. Assembly Instructions 6

4.1 Product Assembly in 2 Steps 6

4.2 Product Incline Adjust 8

4.3 The Remote Control Setup 8

4.4 Treadmill Mode Select 9

4.5 The Smart App Setup 10

5. WELLFIT Health & Fitness App 12

6. Exercise Instructions 13

7. How to Fold and Move the Treadmill 14

8. Maintenance & Care 15

8.1 Centering the Running Belt 16

8.2 Tighten the Running Belt 17

8.3 Running Belts & Treadmill Lubricant 18

8.4 Adjust the Tension of the Folding Handlebar 19

9. Troubleshooting 19

1. Customer Support

HOW TO CONTACT US ON AMAZON?

3 WAYS TO CONTACT US,BEFORE/AFTER ORDER

24/7/365 Online Service, response within 5 hours

OPTION 1:

Find the Seller Profile -- have a question for seller, ask a question -- an item for sale -- Product details

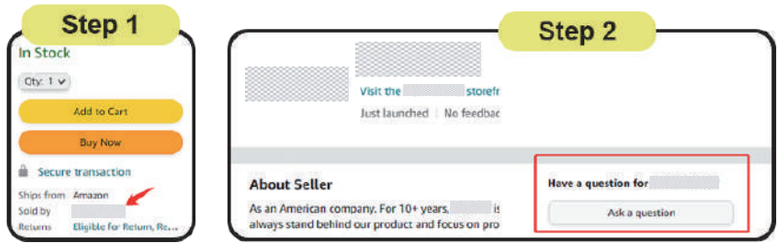

OPTION 2:

Product details page -- “Customer questions & answers” part -- post your question

OPTION 3:

For technical support, the user manual and other information, you can also contact us via support@uswellfit.com

2. Important Precautions

WARNING: To reduce the risk of burns, fire, electric shock, or injury to persons, read all important precautions and instructions in this manual and all warnings on your treadmill before using your treadmill. Seller assumes no responsibility for personal injury or property damage sustained by or through the use of this product.

1. Before beginning any exercise program, consult your physician. This is especially important for persons over age 35 or persons with pre-existing health problems.
2. Keep the treadmill indoors, away from moisture and dust. Do not put the treadmill in a garage or covered patio, or near water.
3. Do not operate the treadmill where aerosol products are used or where oxygen is being administered.
4. During running, it's recommended to wear athletic shoes. Never use the treadmill with bare feet, wearing only stockings, or in sandals to avoid injury.
5. The treadmill is capable of high speeds. Adjust the speed in small increments to avoid sudden jumps in speed.
6. Read, understand, and test the emergency stop procedure before using the treadmill.
7. Never leave the treadmill unattended while it is running. Always press the power switch into the off position, and unplug the power cord when the treadmill is not in use.
8. Add lubrication oil every 3-4 months.
9. For safety, unplug when not in use; during maintenance, unplug. If malfunctioning, stop using, unplug, and get professional inspection. Unplug during power outage to avoid accidents. Hold plug, not wire, when disconnecting to prevent short circuits or hazards.
10. Treadmills are made by fusing the belt together, which creates a seam. The seam is made when the belt is heated up, and all belts are tested to make sure they're good quality. This way of making treadmill belts is the standard in the industry, so you can trust that they're strong and will last a long time.

3. Product Introduction

3.1 Product Diagram

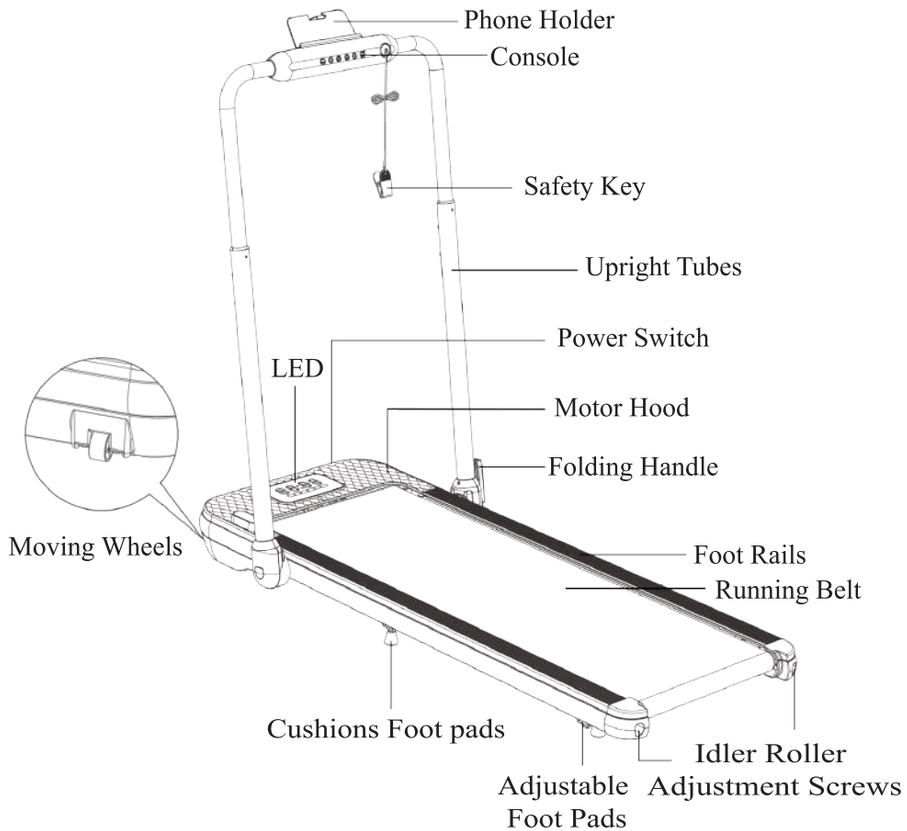

FUNCTION KEY

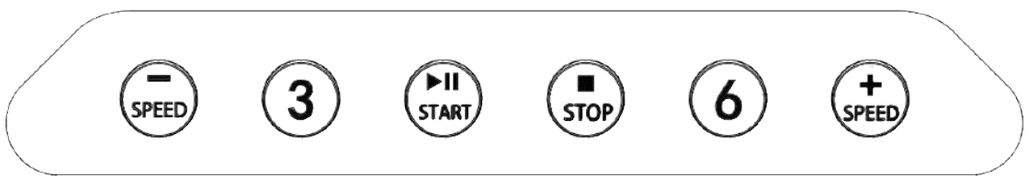

1. STOP: this button is to stop the treadmill, press to stop it and all data will be deleted and reset to the initial setting

2. START/PAUSE: To start the machine, insert the magnet end of the safety key into the computer console and then press this button. This machine requires the Safety Key in order to start. 0.6 mph is the default start speed.

When in use, this button has functions of PAUSE and CONTINUE. Press this button once to PAUSE your workout and the current workout data will still be shown. Press again to back to workout schedule.

3. SPEED +/- BUTTONS: Press the +/- buttons to increase or decrease the speed in increments of 0.2 mph. Pressing and holding either of each buttons for a duration of over 0.5 second will increase or decrease the speed continually.

4. 3/6 QUICK SPEED BUTTONS: these buttons are preset to 3 or 6 mph speeds for convenience.

3.2 Console Diagram

WINDOW DISPLAY

1. Speed: When in running mode, the speed range is 0.6-7.5 mph. When in walking mode, the speed range is 0.6-3.8 mph.

2. Time: The elapsed time range is divided into two.

•Display starts at 0:00, minutes: seconds.

•After it reaches 99:59: seconds, the display will change to minutes. Minutes will change to hours. Count from 01:40(1 hour and 40 minutes) to 18:12.

When time elapsed reaches the maximum, the machine will continue running. It will start count again from 0:00.

3. Distance: Displays the distance traveled (0.0-621.0 MILES).

• When the clock ≤99.9, range change to 0.00~99.9 miles

• When the clock ≥100, it will reset to 0.00 and begin counting again from 0.0, range change to 100~9999 miles.

When distance reaches the maximum, the machine will continue running. It will start count again from 0.00.

4. Calories: Displays the calories from 0 to 9999 kcal. Range display is divided into two

•When Cal ≤ 99.9 kcal, the display is 0.00~99.9 kcal

•When Cal ≥ 100 kcal, the display is 100~9999 kcal. No decimal point anymore.

When distance reaches the maximum, the machine will continue running. It will start count again from 0.00.

PROGRAMS	Initial	Default Value	Display Range
TIME(min:sec)	0:00	0.00	0:00-18:12:15
SPEED(mph)	0	0.6	0-7.5
DISTANCE(mile)	0	1.00	0.00-621.0
CALORIE(kcal)	0	50	0-9999

3.3 Package Contents

Description	Qty.	Description	Qty.
Treadmill Body	1	Lubrication Oils	2
Remote Control	1	4.2*16mm Screws	2
User Manual	1	Open Wrench	1
Socket Wrench	1	6mm Allen Wrench	1
Power Cord	1	5mm Allen Wrench	1
Safety Key	1	Phone Holder	1

3.4 Specifications

Power Supply	AC 110-120V, 60Hz
Peak Motor Power	2.5 HP
Speed Range	0.6-7.5mph
Product Size	52.6*25.4*46.9 inch
Folded Size	56.8*25.4*5.6 inch
Controlling Mode	Console\Remote\App Control

4. Assembly Instructions

4.1 Product Assembly in 2 Steps

To unfold the "folding handle," follow the steps in the diagram:

Step (A): Twist and open the handle in the direction shown. This will cause the lower end of the upright tube to expand to both sides.

Step (B): Lift the upright tube upwards until it reaches the upper limit position.

Step (C): Press down on the "folding handle" to securely lock the upright tube in place.

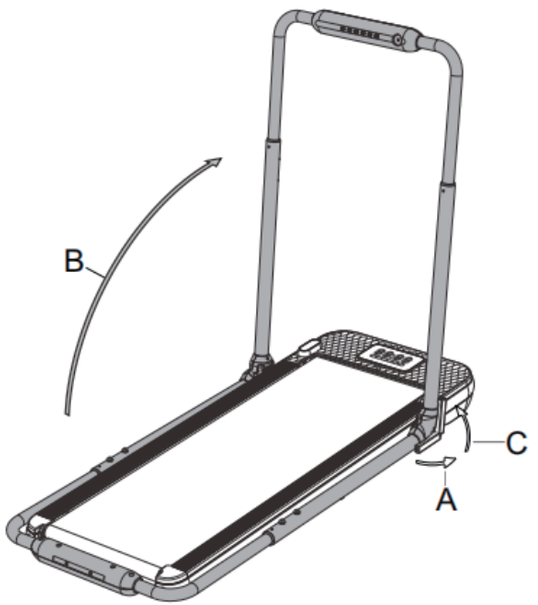

Step (D): Install the phone holder on top of the console using 2 screws.

Place thered safety lock (E) in the yellow position underneath the console. When using the treadmill, clip one end of the safety lock with the attached clamp onto the edge of your clothing.

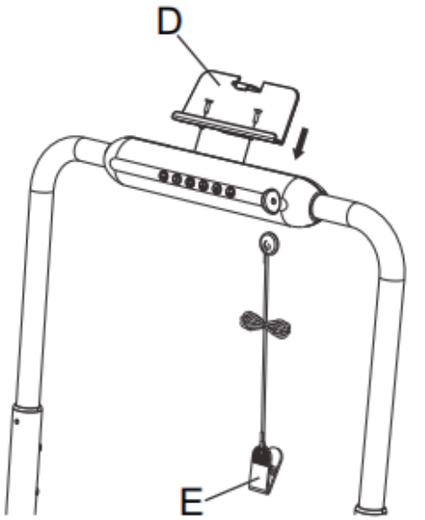

Install the foot pads correctly.

Turn the treadmill sideways and screw the foot pads off the screw holes as shown in the figure above. The foot pads not only help you to change the incline but also decrease cushions.

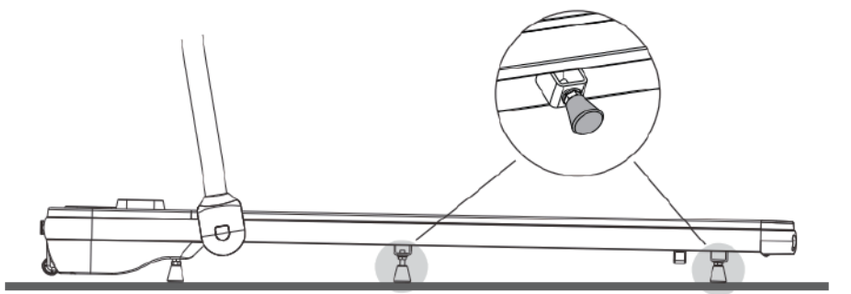

⚠ Important: If the ground is uneven or the treadmill is shaking, please adjust the four adjustable foot pads at the bottom of the treadmill to appropriate positions, the foot pads must fit the ground.

4.2 Product Incline Adjust

1. Installing the foot pad here increases treadmill slope.

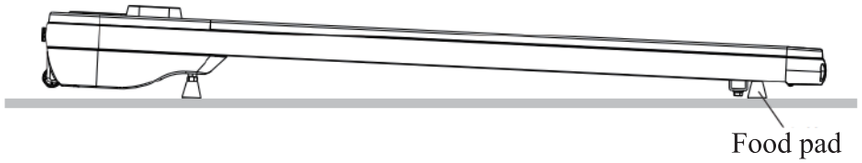

2. Installing the foot pad here reduces treadmill slope.

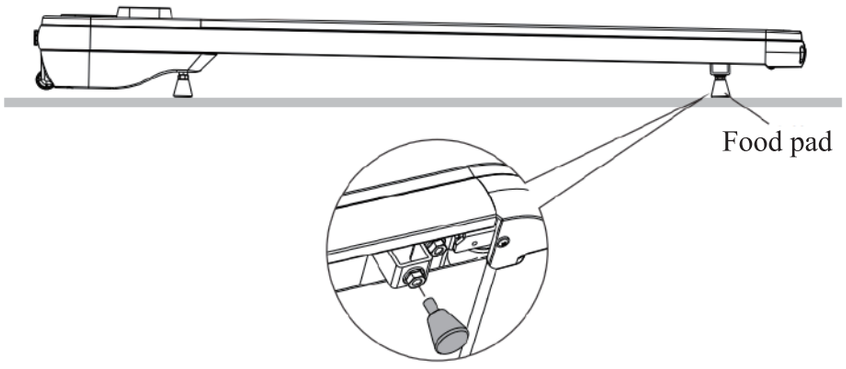

4.3 The Remote Control Setup

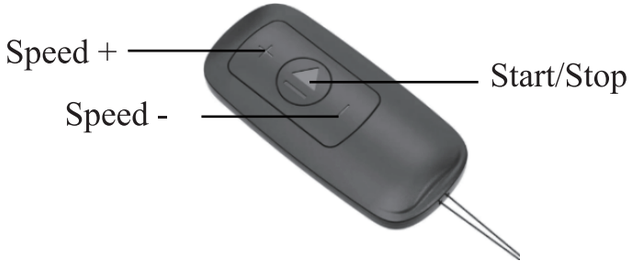

⚠IMPORTANT: Before using the remote control, remove the insulating paper to enable normal operation.

How to pair the remote control?

Step 1: Start the treadmill. Within 10 seconds, unplug the safety lock.

Step 2: Point the remote control at the display window and press and hold the "start/stop" button to pair. You'll hear a "D.D.D" sound to confirm successful pairing.

Function Key

Start/Stop Button: While in standby mode, you can start the treadmill by pressing the "Start/Stop" button. During your workout, pressing the same button will pause the treadmill and reset the display to 0.

Speed+/- Buttons: Press the +/- buttons to increase or decrease the speed in increments of 0.2 mph. Pressing and holding either of each button for 0.5 seconds, speed will continue increase or decrease until this button is released.

Remote Controller Operation Guide:

If the remote controller is unresponsive, check the battery level and replace it if low. If the issue persists even after replacing the battery and pairing, please contact seller to replace the remote controller.

Battery type: CR2032 3V

4.4 Treadmill Mode Select

Walking mode: When the handlebar is folded (parallel to the treadmill), it is in walking mode. In walking mode, the treadmill operates at speeds from 0.6-3.8mph (1 to 6 km/h.)

Running mode: When the handlebar is unfolded, it is in running mode. In running mode, the treadmill operates at speeds from 0.6-7.5 mph (1 to 12 km/h.)

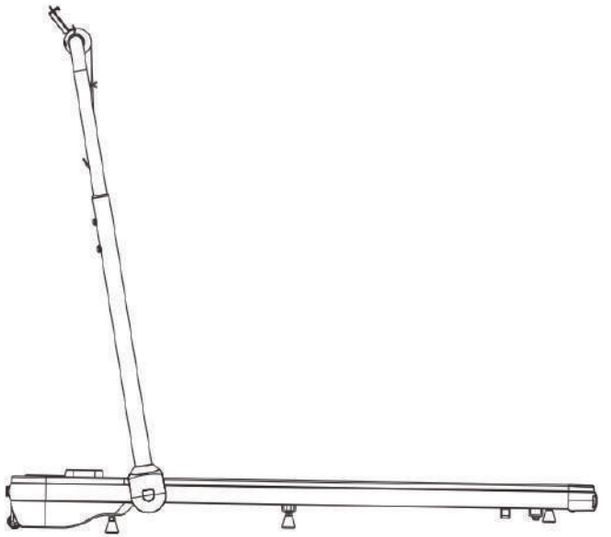

4.5 The Smart App Setup

Step 1. Scan the QR code to download "WELLFIT FITNESS" App, you can also search "WELLFIT FITNESS" from Download on the App Store or GET IT ON Google Play to install the App.

or

Step 2. Run the "WELLFIT FITNESS" App, tap "Register" to register a "WELLFIT FITNESS" account with your email or login with Google account. Then sign in.

Step 3. Turn on your mobile phone Bluetooth and Location enable your treadmill to be found.

Follow the steps as below pics shown.

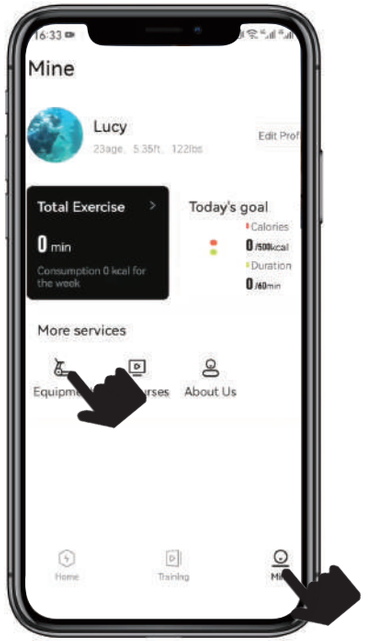

Step 1

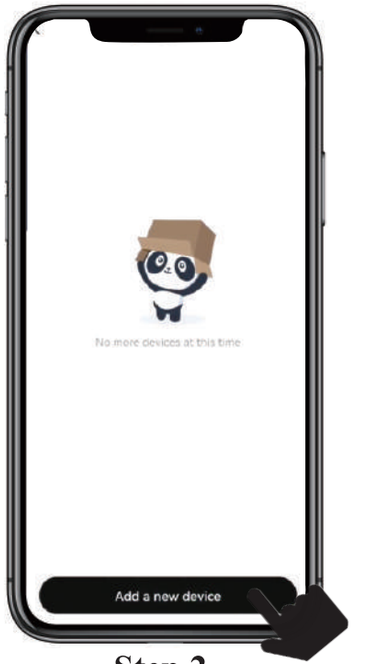

Step 2

Step 3

Step 4

5. WELLFIT Health & Fitness App

Explore more functions and wonder how to use the above functions in detail, please kindly contact us via support@uswellfit.com, so that we can offer a video demonstration.

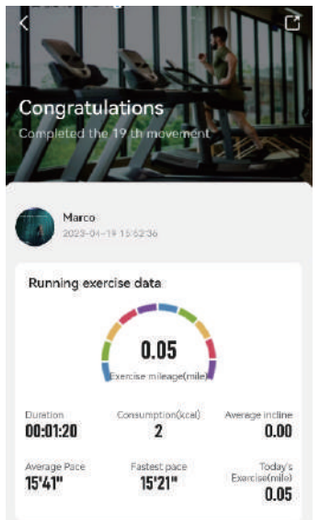

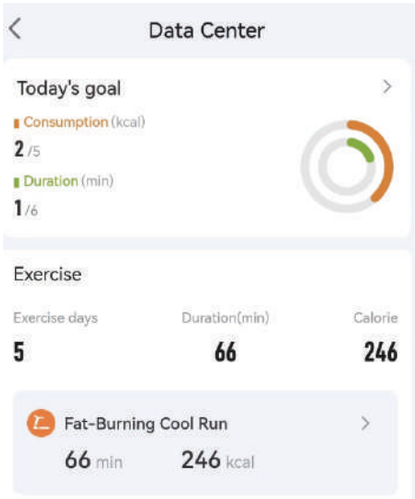

1. Workout statistic track and analyse

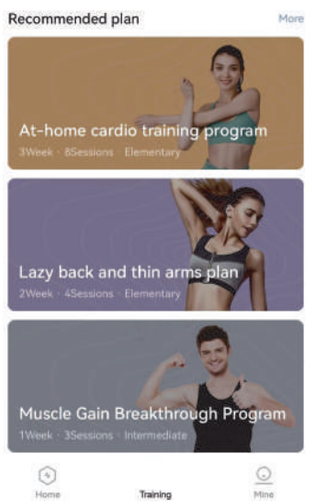

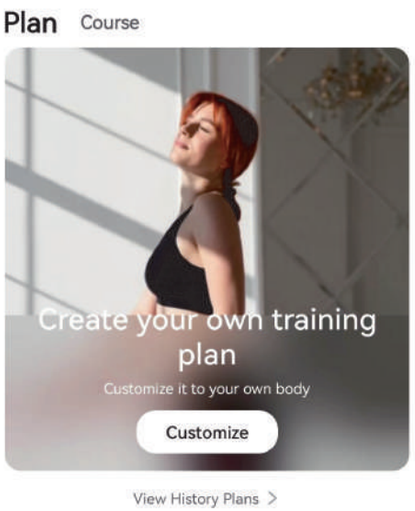

2. Workout plan setting and reminder

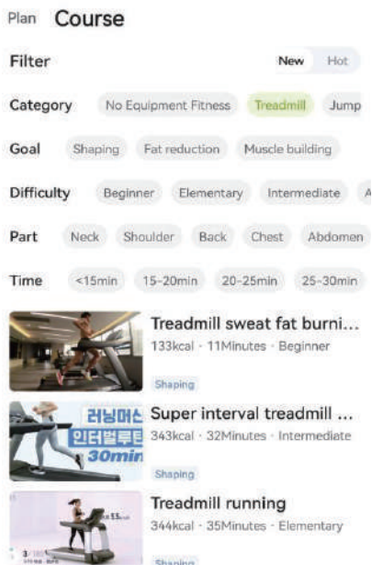

3. Diverse free training course

6. Exercise Instructions

GETTING STARTED:

Before starting any exercise program, you should consult your physician to determine if you have any medical or physical conditions that could put your health and safety at risk or prevent you from using the equipment properly. Be aware of your body's signals. Incorrect or excessive exercise can damage your health. Stop exercising immediately if you experience any of the following symptoms: pain, tightness in your chest, irregular heartbeat, shortness of breath, light headache, dizziness, or feelings of nausea.

Get to know your treadmill. Before attempting to use the treadmill take some time to stand alongside and familiarize yourself with the controls.

1. No matter how fast you walk, it's best to stretch first. Warm muscles stretch more easily, so take 5-10 mins to warm up. Do it again after the exercise.
2. Once you get on, you can stand with your feet on the side rails, stabilize yourself
3. Press the START button on the remote control or app page to start the machine.
4. The machine will start at the system default setting speed of 0.6 MPH. when you feel comfortable, you may slowly increase this speed.

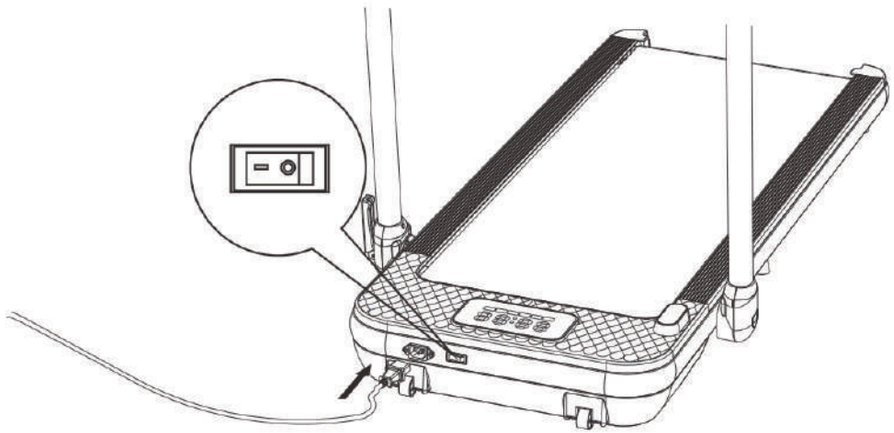

Before Use: Plug in the power cord, turn on the switch, and the treadmill enters standby mode.

After Use: When you are finished with your exercise, switch off the walking pad and unplug the power cord.

7. How to Fold and Move the Treadmill

To **fold the device**, follow Step A: Open the "folding handle" in the direction shown in the picture. As you do this, the lower end of the upright tube will naturally expand to both sides.

Next, proceed to Step B: Gently lower the upright tube towards the rear until it reaches the limit position.

Finally, in Step C: Press down on the "folding handle" to securely lock the upright tube in place.

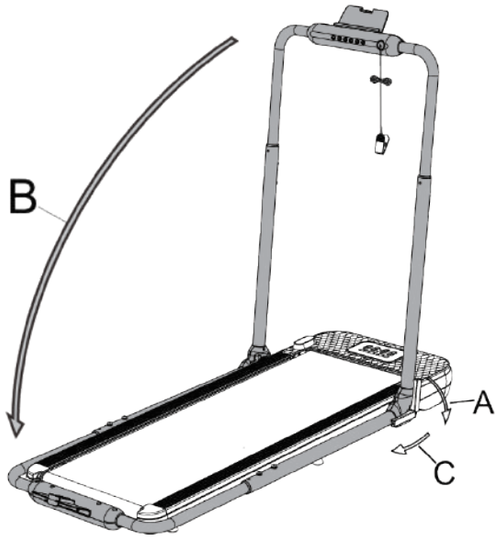

To move the treadmill, unplug the power cord, fold and hold the frame until the wheels are able to move on the ground.

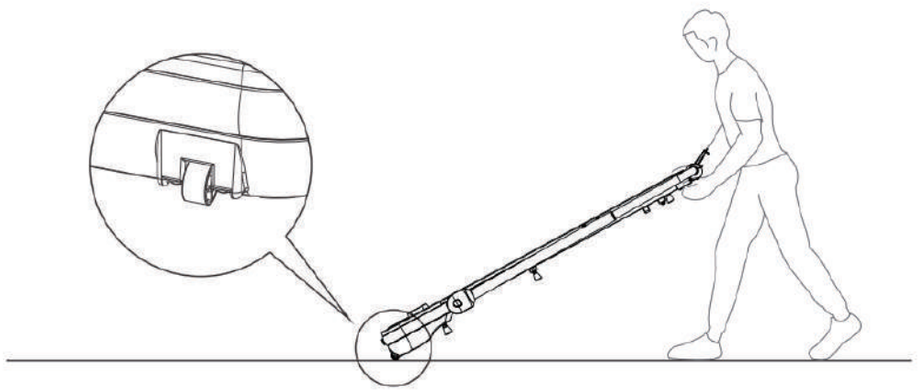

8. Maintenance & Care

General cleaning will help prolong the life and performance of your treadmill. Keep the unit clean and maintained by dusting the components on a regular basis. Clean both sides of the running belt to prevent dust from accumulating underneath the belt. Keep your running shoes clean so that dirt from your shoes does not wear out the running board and belt. Clean the surface of the running belt with a clean damp cloth.

> To better maintain the treadmill and prolong its life it is suggested that the machine be powered off for 10 minutes every 2 hours and fully powered off whenever not in use.

> The moving parts should turn freely and quietly. Abnormality of moving parts will affect the safety of the equipment. Inspect and tighten bolts regularly.

8.1 Centering the Running Belt

Place the treadmill on level ground and set it at 2.0-3.6 mph to check if the Running Belt drifts. Before and after installation, all treadmills need to undergo belt alignment. However, over time, the treadmill may still experience belt deviation. The possible causes for this phenomenon are as follows:

1. Uneven placement of the main unit.
2. User's feet not centered on the treadmill while exercising.
3. Uneven distribution of force applied by the user's feet.

If the belt deviation is caused by user error, it can be resolved by running the treadmill without any load for a few minutes. If the issue persists and cannot be automatically corrected, please use the provided Allen Wrench to adjust the belt alignment gradually as following.

1. If the Running Belt moves to the right, turn the adjusting bolt on the right side 1/4 turn clockwise, then turn the left adjustment bolt 1/4 turn counter-clockwise. If the belt does not move, keep adjusting 1/4 turn at a time until it centers.Refer to picA.

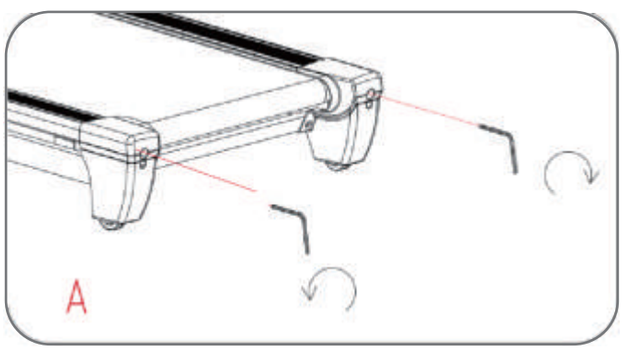

2. If the Running Belt moves to the left, turn the adjusting bolts on the left side 1/4 of a turn clockwise, then turn the right adjustment bolt 1/4 turn counter-clockwise. If the belt does not move, keep adjusting 1/4 turn at a time until it centers. Refer to pic B.

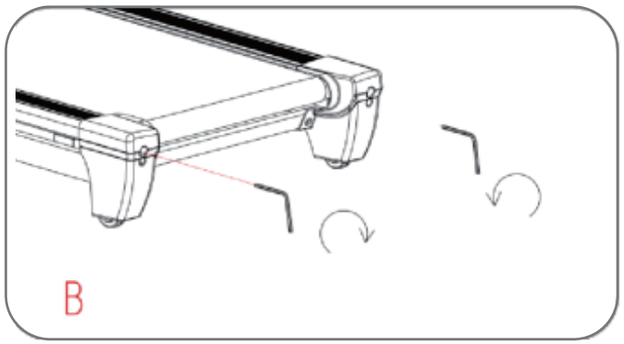

8.2 Tighten the Running Belt

The most suitable tightness for the belts is pulled out 0.2-0.3 inch (two fingers height) from the Running Board.

>A loose Running Belt will result in the runner sliding off when running, while too tight of a Running Belt will result in decrease to the motors performance and also create more friction between the roller and running belts.

Over time the Running Belt will loosen. To tighten the belt turn the Left & Right side adjustment bolts one full turn clockwise, check the tension of the belt. Continue this process until belt is at the correct tension. Make sure to adjust both sides equally to ensure correct belt alignment. Refer to pic C

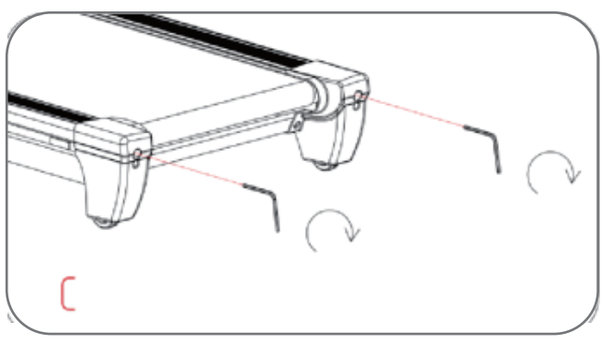

8.3 Running Belts & Treadmill Lubricant

★NOTE: You will need to lubricate your treadmill before the first use

Lubricating the running board and running belt is essential as the friction between the two affects the lifespan and function of the treadmill, therefore it is suggested that the running board and belt be inspected regularly. Should you find any wear on the Running Board, please contact us at: support@uswellfit.com.

Lubrication Check:

To determine if lubrication is needed, simply grab the treadmill belt and touch your hand to the center of the backside of the belt. If your hand feels slightly damp or has a silicone residue, it means no additional lubrication is required. However, if the belt feels dry and there is no residue on your hand, lubrication is needed.

NOTE: Excessive lubrication is not recommended.

Suggestion:

The following time table is recommended :	
Light user (less than 3 hours/week)	every 6 months
Medium user (3-5 hours/week)	every 3 months
Heavy user (more than 5 hours/week)	every 2 months

Lubricant Steps:

1. Turn off the treadmill.
2. Lift a small section of the belt and apply methyl silicone oil on the inner side, towards the center.
3. Set the treadmill to a speed of 0.6 mph and run it smoothly. Lightly step on the belt from left to right for a few minutes to ensure even distribution and absorption of the oil.

8.4 Adjust the Tension of the Folding Handlebar

The machine comes with a pre-adjusted tension that should be suitable for most users. However, if needed, you can make slight adjustments based on your personal preference and wrist strength. Be careful not to loosen it too much, as this can cause shaking between the upright tube and the main body.

Step 1. Remove the plug from the lower end of the left upright tube.

Step 2. Combine the Allen wrench and socket wrench to create a lever.

Step 3. Insert the socket wrench into the hole at the lower end of the left upright tube and align it with the hexagonal nut.

Step 4. Turn clockwise to tighten or counterclockwise to slightly loosen, as desired.

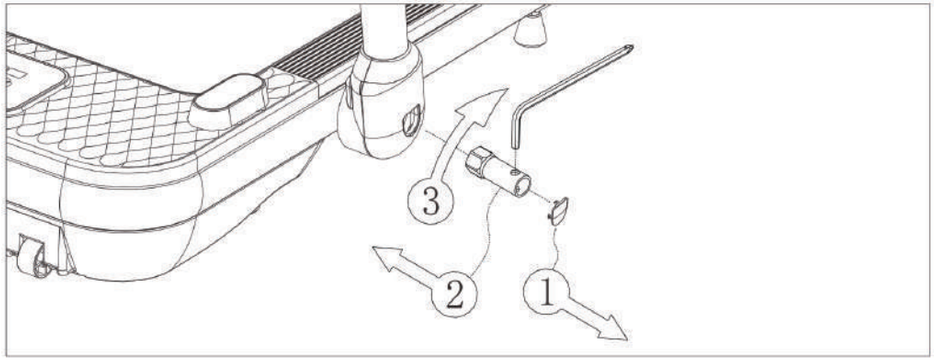

9. Troubleshooting

PROBLEM	POSSIBLE CAUSE	SUGGESTED ACTION
Treadmill will not start	Not plugged in/power is not switch on.	Plug cord into outlet, turn on the treadmill.
	circuit signal system open circuit.	Check controller inputs and signal lines (contact customer support).
Running belt not centered	Running belt tension not correct on the left or right sides of the running board.	Tighten the adjustment bolts on the left and right side of the rear roller.

The running belt does not run smoothly.	Lack of lubrication.	Add lubrication oil.
	Running belt is loose.	Adjust the running belt tightness.
The running belt slipping.	Running belt is too loose.	Adjust the running belt tightness.
	Motor Belt is too loose.	Please first adjust the running belt tightness, if still no function, please contact service support for help.
E01 or E13: Message failure	Wires from the computer and bottom control board not properly connected.	Check wire connections from the computer to the control board. If the wire has been punctured or damaged, you will need to replace it. If the problem is not rectified, you may need to replace the control board.
E02: Burst clash protection	Incoming voltage is lower than 50% of the required voltage.	Check that the incoming power supply is the correct voltage. Otherwise, the control board needs to be replaced.
E03/E04: Current overload protection (Self Protecting System)	The incoming voltage is too low or too high. The control board is damaged.	Restart the treadmill. Check the incoming voltage to ensure it's correct. Check the control board and wires, replace it if damaged.
	A moving part of the treadmill is stuck and therefore the motor is unable to rotate properly	Inspect moving parts of the treadmill to ensure that they are operating correctly. Check the motor, listen for strange noises and check for a burning smell. Replace the motor if necessary.

E05:Motor Abnormality	The motor is damaged or a moving part of the treadmill is stuck and therefore the motor is unable to rotate properly	Inspect moving parts of the treadmill to ensure that they are operating correctly. Replace the motor if necessary.
E06: Motor Abnormality	The motor wire is not connected or the motor is damaged.	Check motor wires to see if the motor is connected. If the wire has been punctured or damaged, you will need to replace it. If the problem is not rectified, you may need to replace the motor
E07: Safety Key Off	The safety key is not sucked	Place the safety key in the yellow position underneath the console.
Display Abnormal	External Disturbance	Turn off the power supply, and power on again after 1 minute.

NOTE: If you are unable to resolve an issue using the troubleshooting guide above, please contact Customer Service at support@uswellfit.com

FCC STATEMENT

This equipment complies with FCC radiation exposure limits set forth for an uncontrolled environment. End users must follow the specific operating instructions for satisfying RF exposure compliance. To maintain compliance with FCC RF exposure compliance requirements, please follow operation instructions as documented in this manual. This transmitter must not be collocated or operating in conjunction with any other antenna or transmitter. This equipment should be installed and operated with a minimum distance of 20cm between the radiator and your body. The availability of some specific channels and/or operational frequency bands are country dependent and are firmware programmed at the factory to match the intended destination. The firmware setting is not accessible by the end user.

This device complies with part 15 of the FCC Rules. Operation is subject to the following two conditions: (1) this device may not cause harmful interference, and

(2) This device must accept any interference received, including interference that may cause undesired operation.

Changes or modifications not expressly approved by the party responsible for compliance could void the user's authority to operate the equipment. This equipment has been tested and found to comply with the limits for a Class B digital device, pursuant to Part 15 of the FCC Rules. These limits are designed to provide reasonable protection against harmful interference in a residential installation. This equipment generates uses and can radiate radio frequency energy and, if not installed and used in accordance with the instructions, may cause harmful interference to radio communications. However, there is no guarantee that interference will not occur in a particular installation. If this equipment does cause harmful interference to radio or television reception, which can be determined by turning the equipment off and on, the user is encouraged to try to correct the interference by one or more of the following measures:

- - Reorient or relocate the receiving antenna.

- - Increase the separation between the equipment and receiver.

- - Connect the equipment into an outlet on a circuit different from that to which the receiver is connected.

- - Consult the dealer or an experienced radio/TV technician for help.ct.

This equipment complies with the FCC RF radiation exposure limits set forth for an uncontrolled environment. This equipment should be installed and operated with a minimum distance of 20cm between the radiator and any part of your body.