AGX-i6S

AGX-iA6B

USER MANUAL

Digital Proportional Radio Control System

Contents

1. Safety 1
1.1 Safety Symbols 1
1.2 Safety Guide 1
2. Introduction 2
2.1 System Features 2
2.2 Transmitter Overview 3
2.2.1 Transmitter Antenna 4
2.2.2 Mobile device mounting point 4
2.2.3 Switches 4
2.2.4 Knobs 4
2.2.5 Keys 4
2.2.6 Gimbals 4
2.2.7 Lanyard Eye 5
2.2.8 Power Switch 5
2.2.9 USB Simulatior Function 5
2.2.10 PS/2 Port 5
2.3 Receiver Overview 6
2.3.1 Receiver Antenna 6
2.3.3 Status Indicator 6
2.3.3 Connectors 6
3. Getting Started 7
3.1 Transmitter Battery Installation 7
3.2 Connecting the Receiver and Servos 7
4. Operation Instructions 8
4.1 Power On 8
4.2 Binding 8
4.3 Pre-use Check 8
4.4 Power Off 9
5. DIY Customization 10
5.1 Throttle Bracket Installation 10
5.2 Throttle Spring Installation 11
5.3 Swapping Gimbals 12
5.4 Knob Bracket Installation 13
5.5 Knob Spring Installation 14
5.6 Device Holder 15

6. Product Specifications.....17
6.1 Transmitter specification(AGX-i6S) 17
6.2 Receiver Specification(AGX-iA6B) 17
7. Package Contents 18
8. Certification 19
8.1 DoC Declaration.....19
8.2 CE Warning.....19
8.3 Appendix 1 FCC Statement 19
9. Environmentally friendly disposal.....20

1. Safety

1.1 Safety Symbols

Pay close attention to the following symbols and their meanings. Failure to follow these warnings could cause damage, injury or death.

Danger	• Not following these instructions may lead to serious injuries or death.
Warning	• Not following these instructions may lead to major injuries.
Attention	• Not following these instructions may lead to minor injuries.

1.2 Safety Guide

Prohibited **Mandatory**

- **Do not use the product at night or in bad weather like rain or thunderstorm. It can cause erratic operation or loss of control.**
- **Do not use the product when visibility is limited.**
- **Do not use the product on rain or snow days. Any exposure to moisture (water or snow) may cause erratic operation or loss of control.**
- **Interference may cause loss of control. To ensure the safety of you and others, do not operate in the following places:**
  - Near any site where other radio control activity may occur
  - Near power lines or communication broadcasting antennas
  - Near people or roads
  - On any body of water when passenger boats are present
- **Do not use this product when you are tired, uncomfortable, or under the influence of alcohol or drugs. Doing so may cause serious injury to yourself or others.**
- **The 2.4GHz radio band is limited to line of sight. Always keep your model in sight as a large object can block the RF signal and lead to loss of control.**
- **Never grip the transmitter antenna during operation. It significantly degrades signal quality and strength and may cause loss of control.**
- **Do not touch any part of the model that may generate heat during operation, or immediately after use. The engine, motor or speed control, may be very hot and can cause serious burns.**
- **RISK OF EXPLOSION IF BATTERY IS REPLACED BY AN INCORRECT TYPE.**
  - Disposal of a battery into fire or a hot oven, or mechanically crushing or cutting of a battery, that can result in an explosion
  - Leaving a battery in an extremely high temperature surrounding environment that can result in an explosion or the leakage of flammable liquid or gas
  - A battery subjected to extremely low air pressure that may result in an explosion or the leakage of flammable liquid or gas

---

- **Misuse of this product may lead to serious injury or death. To ensure the safety of you and your equipment, read this manual and follow the instructions.**
- **Make sure the product is properly installed in your model. Failure to do so may result in serious injury.**
- **Make sure to disconnect the receiver battery before turning off the transmitter. Failure to do so may lead to unintended operation and cause an accident.**
- **Ensure that all motors operate in the correct direction. If not, adjust the direction first.**
- **Make sure the model flies within a certain distance. Otherwise, it would cause loss of control.**

2. Introduction

The AGX-i6S transmitter and AGX-iA6B receiver constitute a 6 channel 2.4GHz AFHDS 2A digital proportional computerized R/C system. This system supports quadcopter.

2.1 System Features

The AFHDS 2A (Automatic Frequency Hopping Digital System Second Generation) developed and patented by FLYSKY is specially developed for all radio control models. Offering superior protection against interference while maintaining lower power consumption and high reliable receiver sensitivity, FLYSKY's AFHDS technology is considered to be one of the leaders in the RC market today.

	Bidirectional Communication Capable of sending and receiving data, each transmitter is capable of receiving data from temperature, altitude and many other types of sensors, servo calibration and i-BUS Support.
	Multi-channel Hopping Frequency This systems bandwidth ranges from 2.408GHz to 2.475GHz. This band is divided in 135 channels. Each transmitter hops between 16 channels (32 for Japanese and Korean versions) in order to reduce interference from other transmitters.
	Omni-directional Gain Antenna The high efficiency Omni-directional high gain antenna cuts down on interference, while using less power and maintaining a strong reliable connection.
	Unique ID Recognition System Each transmitter and receiver has it's own unique ID. Once the transmitter and receiver have been paired, they will only communicate with each other, preventing other systems accidentally connecting to or interfering with the systems operation.
	Low Power Consumption The system is built using highly sensitive low power consumption components, maintaining high receiver sensitivity, while consuming as little as one tenth the power of a standard FM system, dramatically extending battery life.

2.2 Transmitter Overview

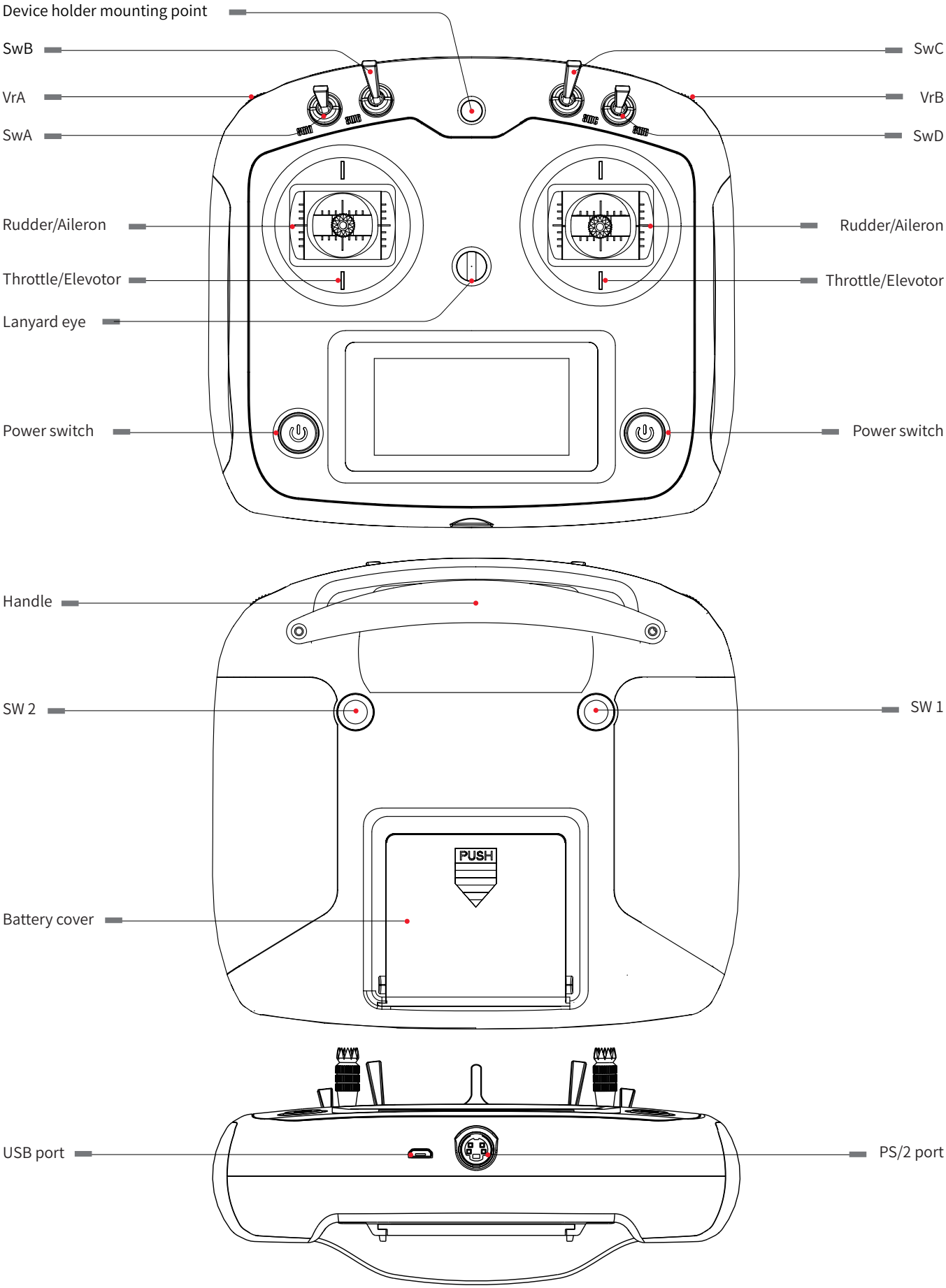

2.2.1 Transmitter Antenna

The AGX-i6S transmitter has a built-in dual omnidirectional antenna.

⚠ Note	• **Never grip the transmitter antenna during operation. It significantly degrades the RF signal quality and strength and may cause loss of control.**

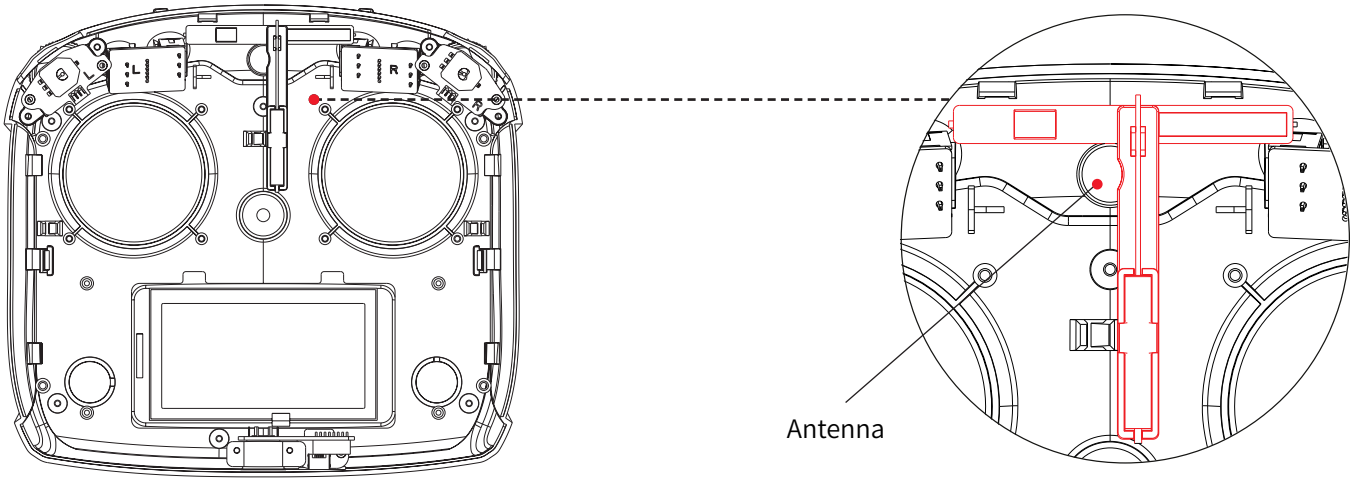

2.2.2 Mobile device mounting point

Use for securing the mobile device mount.

2.2.3 Switches

Switches SwA, SwB, SwC and SwD can be assigned to both auxiliary channels and other functions to enable quick control of various perameters. (The way in which the switch is assigned or used may differ depending on the current menu)

2.2.4 Knobs

VrA and VrB can be assigned to auxiliary channels.

2.2.5 Keys

Buttons one and 2 can be assigned to auxilary channels or timer control.

2.2.6 Gimbals

The gimbals are use to control the models control surfaces including but not limited to ailerons, flaps, rudder and throttle. It is possible to change the stick mode to match your personal prefrence in the【Sticks mode】menu.

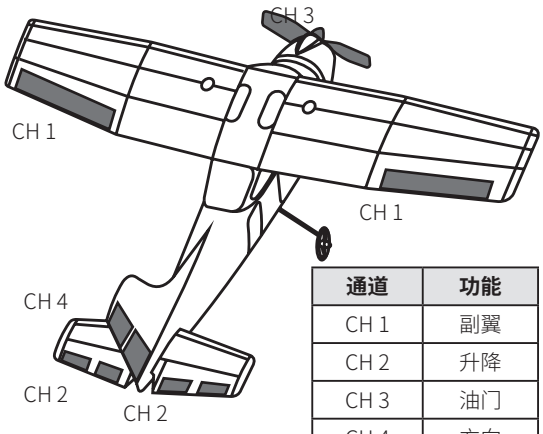

通道	功能
CH 1	副翼
CH 2	升降
CH 3	油门
CH 4	方向

2.2.7 Lanyard Eye

Use for attaching a lanyard.

2.2.8 Power Switch

Used for powering the system on and off.

2.2.9 USB Simulatior Function

The system can be connected via a USB cable to a computer for use as a HID device. This function is automatically activated when connected to a computer and will be recognised as a standard HID controller.

⚠	**Caution**	• **If the computer does not recognise the transmitter unplug and reconnect the USB cable.**

2.2.10 PS/2 Port

This port enables PPM output.

2.3 Receiver Overview

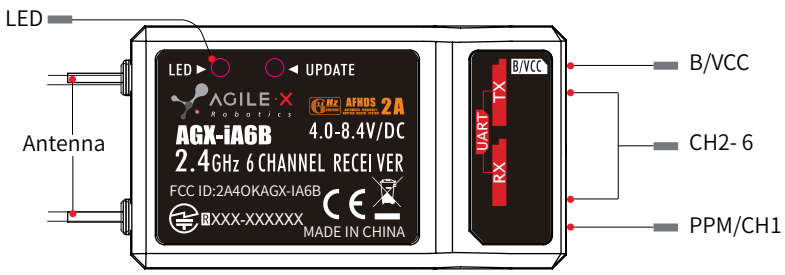

2.3.1 Receiver Antenna

The AGX-iA6B has a dual 26mm omnidirectional antenna.

⚠ **Caution**	• **For best signal quality, ensure that the receiver is mounted away from motors or metal parts.**

2.3.2 Status Indicator

The status indicator is used to indicate the power and working status of the receiver.

- Off: The power is not connected.
- Lit in red: The receiver is on and working.
- Flashing quickly: The receiver is binding.
- Flashing slowly: The bound transmitter is off or signal is lost.

2.3.3 Connectors

The connectors are used to connect the parts of model and the receiver.

- PPM/CH1: Connection of CH1 or PWM output signal.
- CH2 to CH6: Used to connect the servos, power or other parts.
- B/VCC: Used to connect the bind cable for binding, and the power cable during normal operation,in the range of 4.0~8.4V.
- SERVO: For connecting an i-BUS receiver,it can output i-bus/s.bus signal.
- SENS: For connecting sensors.

3. Getting Started

Before operation, install the battery and connect the system as instructed below.

3.1 Transmitter Battery Installation

⚠ Danger	•	**Only use specified battery (X4 AA batteries).**
⚠ Danger	•	**Do not open, disassemble, or attempt to repair the battery.**
⚠ Danger	•	**Do not crush/puncture the battery, or short the external contacts.**
⚠ Danger	•	**Do not expose to excessive heat or liquids.**
⚠ Danger	•	**Do not drop the battery or expose to strong shocks or vibrations.**
⚠ Danger	•	**Always store the battery in a cool, dry place.**
⚠ Danger	•	**Do not use the battery if damaged.**

Follow the steps to install the transmitter battery:

1. Open the battery compartment.
2. Insert 4 fully-charged AA batteries into the compartment. Make sure that the battery makes good contact with the battery compartment's contacts.
3. Replace the battery compartment cover.

3.2 Connecting the Receiver and Servos

Connect the receiver and the servos as indicated below:

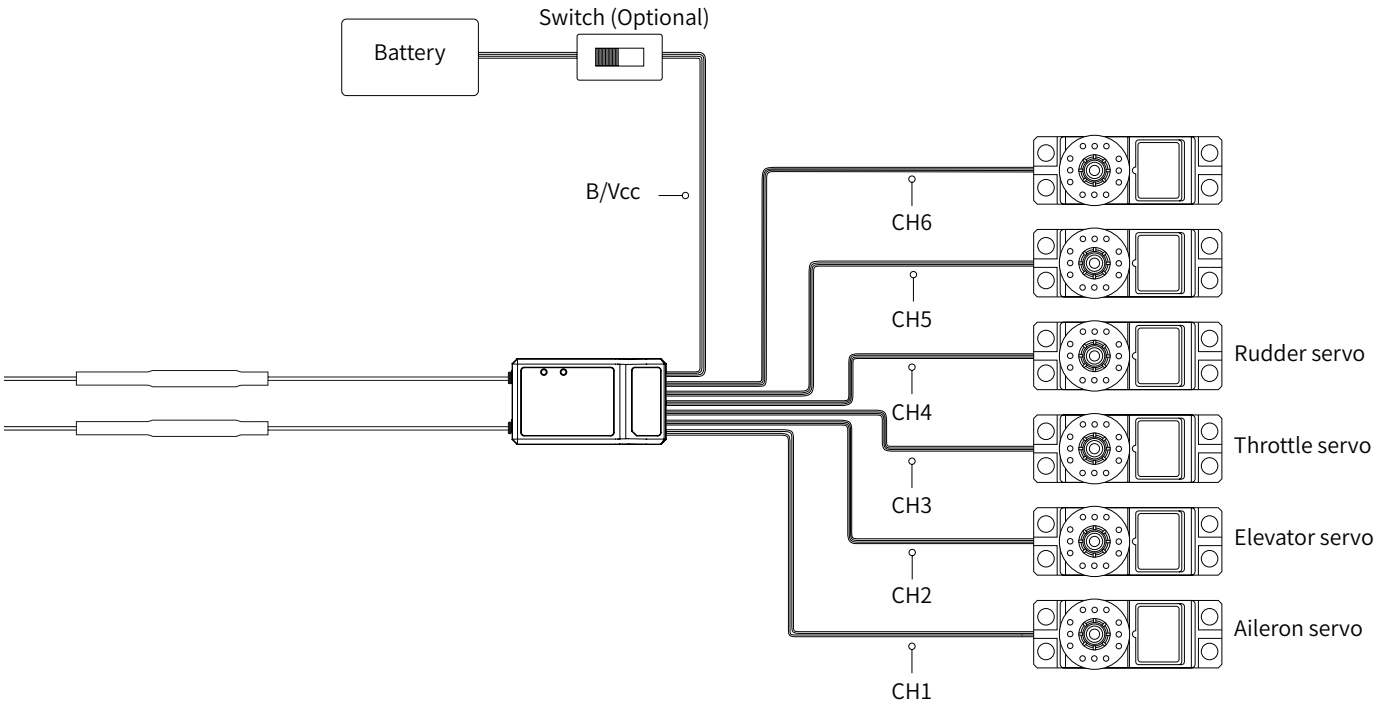

4. Operation Instructions

After setting up, follow the instructions below to operate the system.

4.1 Power On

Follow the steps below to turn on the system:

1. Check the system and make sure that:
   - The batteries are charged and installed properly.
   - The receiver is off and correctly installed.
2. Hold the power buttons until screen lights up.
3. Connect the receiver power supply to the **B/VCC** port on the receiver.

⚠ **Note**	• **Operate with caution in order to avoid damage or injury.**
⚠ **Note**	• **Make sure that the throttle is at its lowest position and the switches are set to their up position.**

4.2 Binding

The transmitter and receiver have been pre-bound before delivery.

If you are using another transmitter or receiver, follow the steps below to bind the transmitter and receiver:

1. Turn the transmitter on, press SW2 to select **[System]**, and scroll down and then select [**RX bind**].
2. Connect the bind cable to the **B/VCC** port of the receiver.
3. Connect the power to any other port. The indicator will start to flash, indicating that the receiver is in bind mode.

- After successfully binding the transmitter will automatically exit this menu, then the receivers LED will stop flashing indicating that binding has been successful.

4. Remove the bind and power cable from the receiver. Then connect the power cable to the **B/VCC** port.
5. Check the servos' operation. If anything does not work as expected, restart this procedure from the beginning.

- This binding information only applies to the AGX-i6S and the AGX-iA6B receiver, different receivers may require a different pocedure to complete the binding process. Please visit the official FLYSKY website for the latest information on compatible receivers and their respective usermanuals.
- All of our products receiver regular updates, please visit our website for more information and firmware downloads.

4.3 Pre-use Check

Before operation, perform the following steps to check the system:

1. Check to make sure that all servos and motors are working as expected.
2. Check operating distance: one person holds the transmitter, and another one moves the model away from the transmitter. Check the model and mark the distance from where the model starts to lose control.

⚠ **Danger**	• **Stop operation if any abnormal activity is observed.**
⚠ **Danger**	• **Make sure the model does not go out of range.**
⚠ **Attention**	• **Sources of interference may affect signal quality.**

4.4 Power Off

Follow the steps below to turn off the system:

1. Disconnect the receiver power.
2. Hold the transmitter's power buttons to turn off the transmitter.

⚠ **Danger**	• **Make sure to disconnect the receiver power before turning off the transmitter. Failure to do so may lead to damage or serious injury.**

5. DIY Customization

The system can be reconfigured to change joystick placement, knob response etc.

5.1 Throttle Bracket Installation

The gimbals can have their self centering function deactivated or activated, to do so follow the steps below:

Attention	• **These instructions are for mode 2, steps 3-6 are for making changes to the right stick shown in picture. Do not dismantle the left stick.**

1

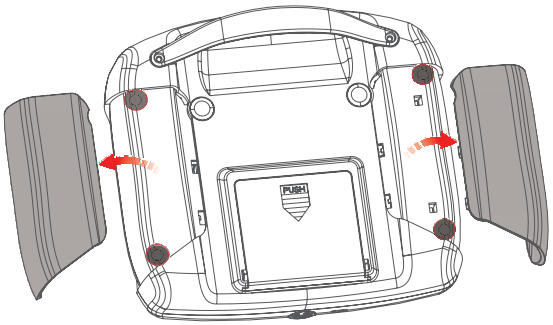

1. Use tweezers to remove the left and right hand grips. Then use a screwdriver to remove the 4 screws marked in red.

2

2. Carefully pull the front and back covers apart. There are 2 cables connecting the back and front.

- The throttle spring installation, swapping gimbals, knob bracket installation and knob spring installation requires that the transmitter be disassembled and reassembled. The disassembly instructions will only be provided here, not for each change.

3

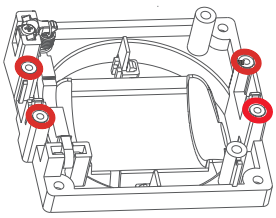

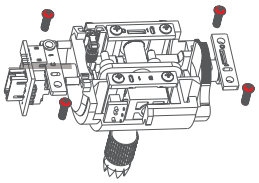

3. Loosen the assembly screws shown in fig.4 and remove the plate. Be careful to ensure no damage to cables.

4

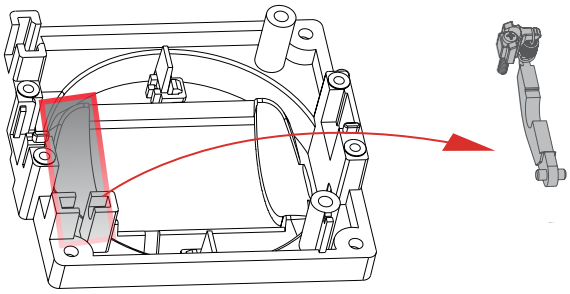

4. Remove the bottom of the seat assembly of the spring hook assembly.

5

5. Secure the assembly back in its original position with the 4 screws.

6

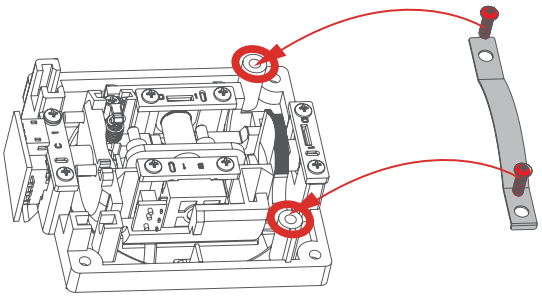

6. Secure the bracket using the screws provided.
   - If the screws are too tight or too loose the mechanism may not work as expected.

7

7. The assembly process is now complete.

5.2 Throttle Spring Installation

The following instructions explain how to install the vertical self-centering spring.

1

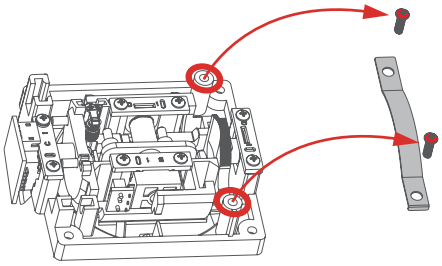

3. Take the transmitter apart,then remove the screws marked in blue and remove the bracket.

2

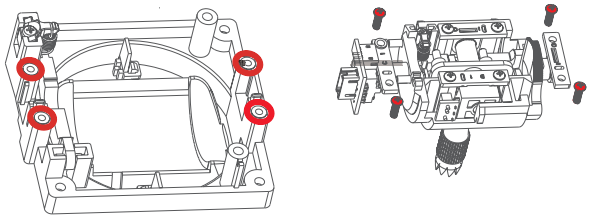

2. Loosen the screws shown in fig.4 and remove the plates.

3

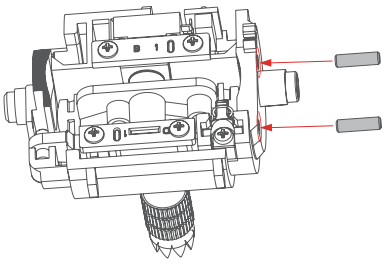

3. Insert the 2 dowels as shown above.

4

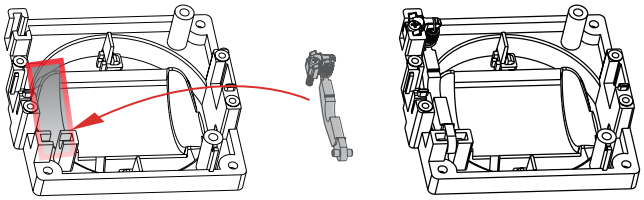

4. Place the spring hook assembly into position and hook the spring onto the hook located inside the transmitter.

5

5. Secure the assembly back in its original position with the 4 screws.

6

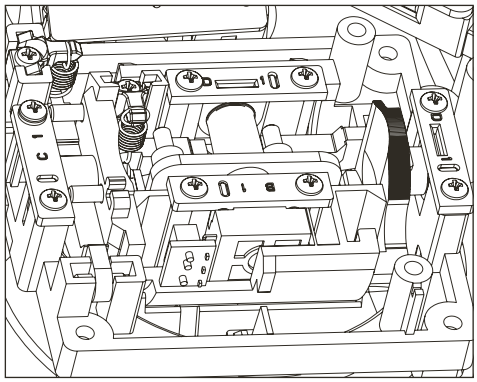

6. Throttle spring installation complete.

5.3 Swapping Gimbals

When changing between modes 2/4 and 1/3 you will need to switch the gimbals around so that the throttle gimbal is on the correct side.

1

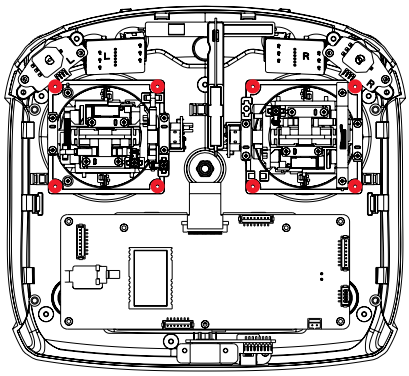

1. Take the transmitter apart, using a Philips screwdriver, remove the 8 screws marked in red.

2

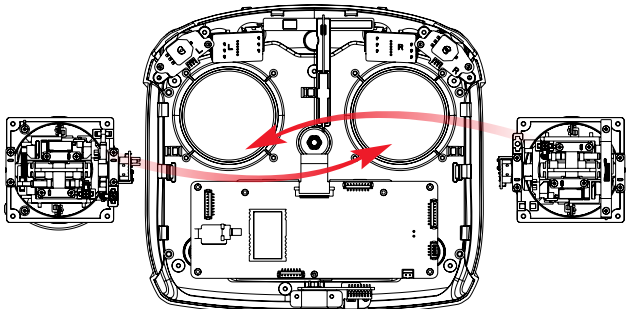

2. Swap the gimbals and rotate them 180 degrees, then line them up with the screw holes and replace the screws. (There is no need to disconnect the cables.)

3

3. Replace the hand grips and insert batteries.

4

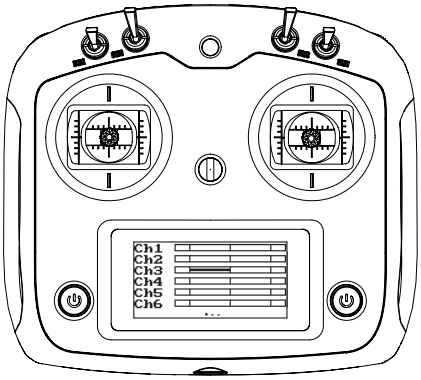

4. Turn on the transmitter and enter the servo display screen to make sure everything is working as expected.

5.4 Knob Bracket Installation

The AGX-i6S has 2 knobs that can be changed from self-centering to non-self-centering.

1

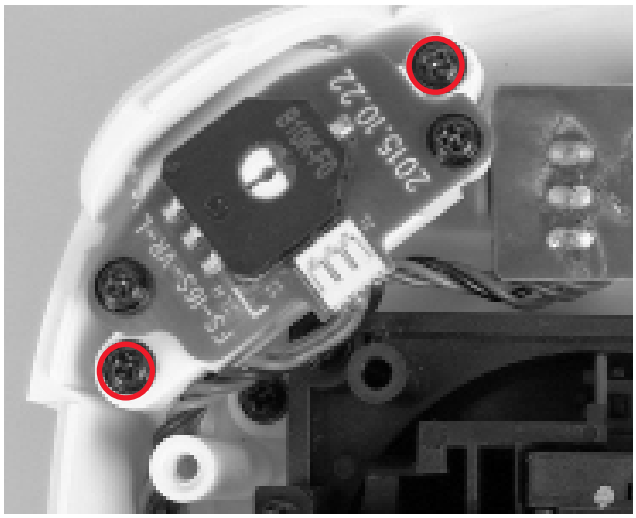

1. Take the transmitter apart, then use a screwdriver to remove the screws marked in red.

2

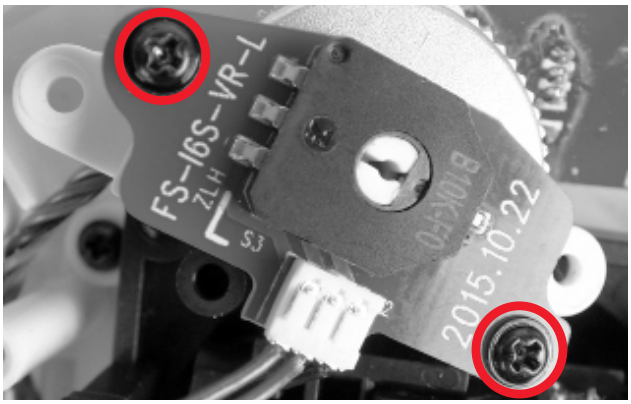

2. Remove the PCB screws marked in red.

3

3. Remove the knob from the potentiometer and put them in a safe place.

4

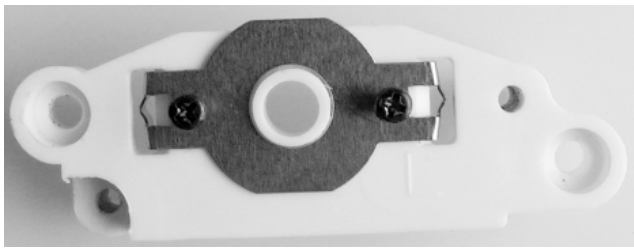

4. Install the bracket shown above and secure with the screws provided.

5

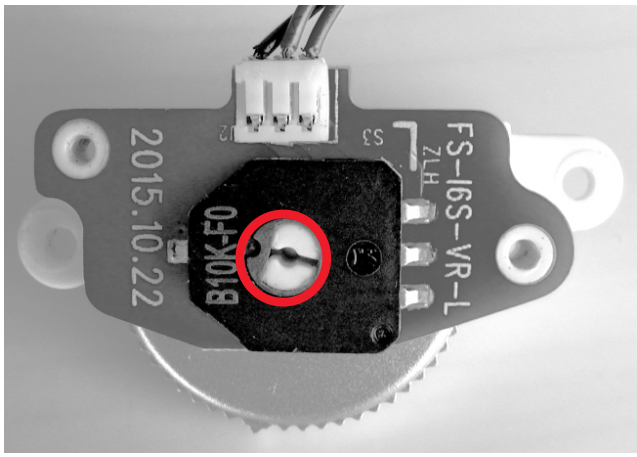

5. Reassemble the parts keeping everything in alignment. Then replace all the screws.

6

6. Place the fully assembled part back into its original position and secure with the screws.