安全注意事项 <SAFETY PRECAUTIONS>

- 此无线遥控模型并非玩具！
- 操作前要完成装配,以便可享受到更多的乐趣。操作后要做维护工作,替换零件和自选零件可分开用。
- 干电池或充电电池的不适当使用，会损害车或无线电的系统。

- It is a radio control model, not a toy!
- In order to enjoy running the car, you need to finish assembly before operation.Do routine maintenance work after operation. Replacement parts and option parts are available separately.
- Improper usage with Alkaline cells or rechargeable batteries may damage the electronics for the car or the radio.

为了安全地操作此模型，请遵守以下规定：
<IN ORDER TO OPERATE THE CAR SAFELY,BE SURE THAT YOU HAVE OBSERVED THE FOLLOWING POINTS:>

警告 WARNING!

为了避免发生事故(对车和人而言)，请遵循以下各项。
Please follow the points as below in order to prevent accident from happening to the car and people.

- 开始组装前，须彻底阅读说明书。为了正确地装配模型，首次装配者应请教有操作经验的人。

  Be sure to read thoroughly the manual before you begin. Fresh user should seek advice from people having rich experience in order to assemble the model correctly.

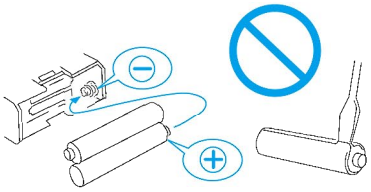

- 勿反接或分解电池，这会导致电池的破损或液漏。

  Never reverse connection/disassemble the battery. This may lead to damage and leakage.

- 产品含有小且尖锐的零件，所以在装配和贮藏时，要放在儿童摸不到的地方。

  As the product contains small and sharp parts, assemble and store this product only in places out of the reach of children.

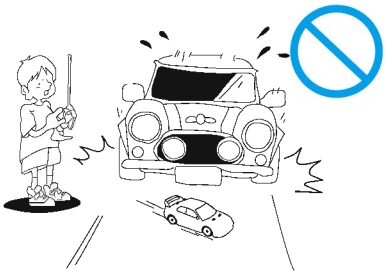

- 勿在公共车道或人群拥挤的地方操作模型，以免发生意外事故。

  Do not operate the model on public roads, in crowded places and near infant as it may cause accidents.

警告 WARNING!

请遵循以下操作步骤，以免你的身体受到伤害或损害到材料的特性。
Please follow the following steps to operate,in order to prevent hurt to your body or damage of material property.

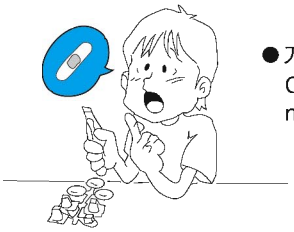

- 刀具，镊子，螺丝等需小心处理。

  Cutters, nippers and screwdrivers need careful handling.

- 涂装时，必须在通风设备好的地方。

  Painting must be done only in a well-ventilated area.

- 当模型不使用时，先关闭模型车、后关遥控器电源。此外，断开模型车的电池连接，并从遥控器中取出电池，以免电池过热或漏液。

  When the model is not in use, always turn off the receiver and transmitter. Further more, disconnect the batteries and remove them from the model and the transmitter. This may be dangerous such as overheat and leakage.

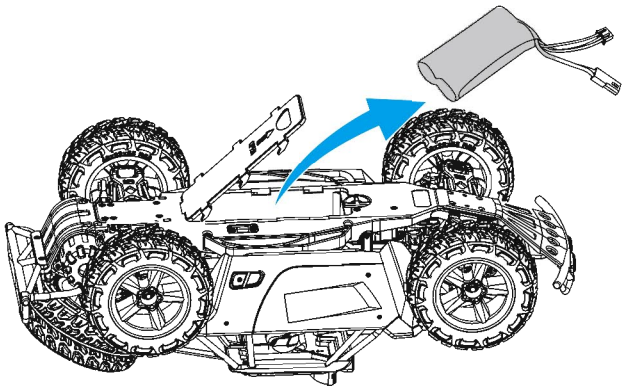

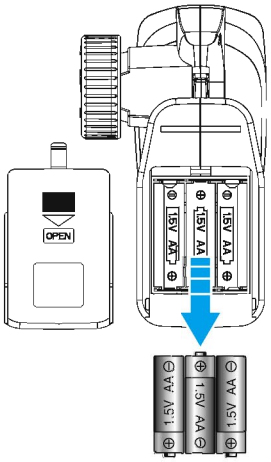

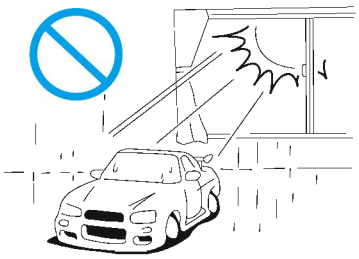

●勿把模型放在高温，潮湿及阳光直射的地方。
Do not expose this model to high temperature,humidity or direct sunlight.

安全操作模型 (OPERATING YOUR MODEL SAFELY)

警告 WARNING!

不可在以下地方或情形下使用本车(不遵循操作惯例可能会导致事故发生)
Do NOT operate the model in the following places and situations. (Non–observance may lead to accident!)

●只可在空旷无人的地方使用本车！
勿在以下地方使用本车：
Operate your model in spacious areas ONLY with few people around!Do not operate it:

1、公路上。
On road!
2、儿童或人群聚集的地方。
In places where children and many people gather!
3、生活区公园里。
In residential districts and parks!
4、室内或空间有限的地方。不遵循操作惯例可能会导致人身伤害或财产损失！
Indoors and in limited space!Non–observance may result in personal injury and property damage!

●当车子行动异常时立即停止使用并检查其原因。
The car must stop immediately and check for the reasons when it is operating abnormal.
只要车子故障未被消除，则不能使用车子。否则可能会出现更大的故障，并发生意外事故。
As long as the problem is not cleared, do NOT operate it! This may lead to further trouble and unforeseen accidents!

●须经常检查无线电装置的干电池！
Always check the radio batteries!
若电池电量不足，发射和接收效果将不理想。在此种情况下，车子可能会出现失控现象，也可能会导致严重事故！
With weak dry batteries, transmission and reception of the radio would fall off. You may lose control of your model in such condition.This may also cause serious accidents!!

●保持警惕,周围可能有人也在操作模型车！
Keep in mind that people around you may also operate a radio control model!
勿与他人同时使用同一频率！否则信号会发生混乱，车子会失控，可能导致事故发生。
NEVER share the same frequency with somebody else at the same time! Otherwise,Radio signals will be mixed up and you will lose control to your model. This may lead to accidents.

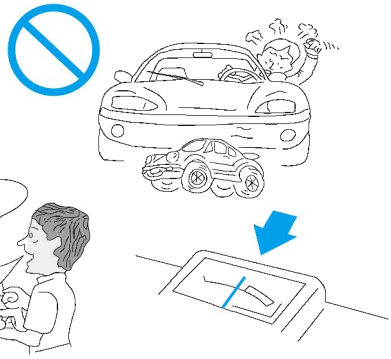

警告 WARNING!

为了避免发生事故或受伤，请遵守以下规定：
In order to avoid accidents and personal injury,be sure that you have observe the following points:

●电池的安全：
The safety of battery：

1、将耗尽电量的电池交给专门的环保部门处理！
Exhaust battery should be safety dispose!
2、非充电电池禁止充电，否则可能有爆炸的危险！
Non rechargeable batteries are not to be recharged,there is danger of explosion!
3、不可将电池扔进火源里，否则可能引起电池爆炸！
Do not throw the of battery into a fire!There is danger of explosion!
4、不可吞咽电池！
Do not swallow battery!
5、将电池放在凉爽、干燥避光及小孩接触不到的地方！
Store only in cool,dry and dark places and should be keep out of the children!
6、电池漏液而且滴到眼睛里，请马上用大量的清水清洗，然后到附近的医院就医。
When the battery leaks the liquid and let it into you eyes,please right away rinse them and consult an ophthalmologist.

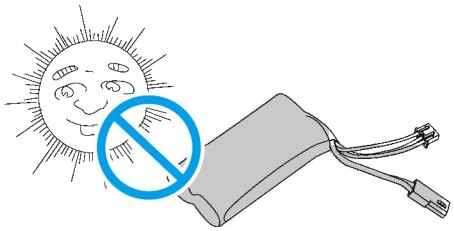

禁止(PROHIBITED)

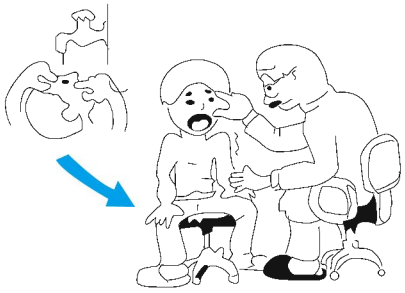

●不可将手指或其他物体放进正在旋转或移动的部件中。
Do NOT put fingers or any objects inside rotating and moving parts!

●刚使用完毕时，勿触摸马达，因有烫伤危险！
Right after use, do NOT touch the motor! Danger of burning yourself!

内容(Contens)

包含以下配件(Included the following parts)

■ 车壳(以实际产品为准)
Body(To the actual product)

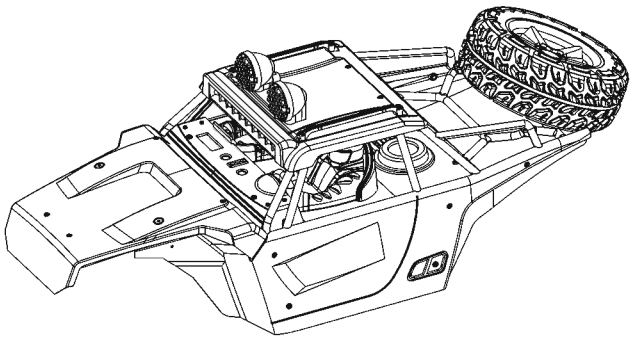

■ 遥控器 Transmitter

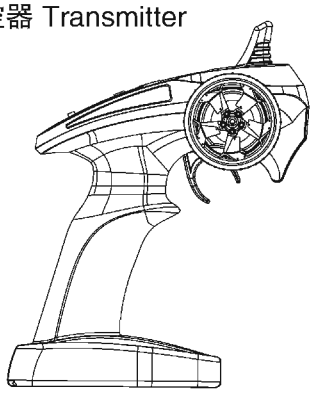

■ 底盘(以实际产品为准)
Chassis(To the actual product)

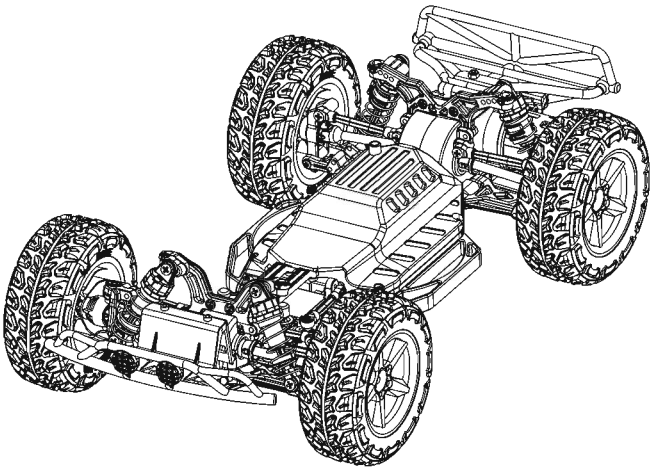

■ 7.4V 1500 mAh 大倍率锂电池
7.4V 1500 mAh Large power
Li–Po battery

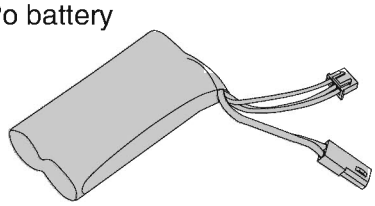

■ 充电器
Charger

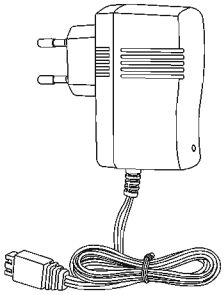

■ 十字扳钳(小的)
Cross Wrench(small)

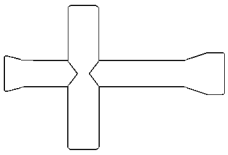

■ 螺丝刀
Screwdriver

■使用说明书
Instruction manual

无线电接收装置(About the Radio)

1、对频说明：先打开遥控模型车电源开关，按住遥控器上的对频按键，再打开遥控器开关，此时可听到伺服器的回位居中声，此时对频成功。
Frequency Description: First, turn on the remote control model car power switch, press the button for frequency bind and then switch on the transmitter. If the frequency bind is successful, the server will make a sound.

2、接收机插头示意图
Accept the machine plug schematic.

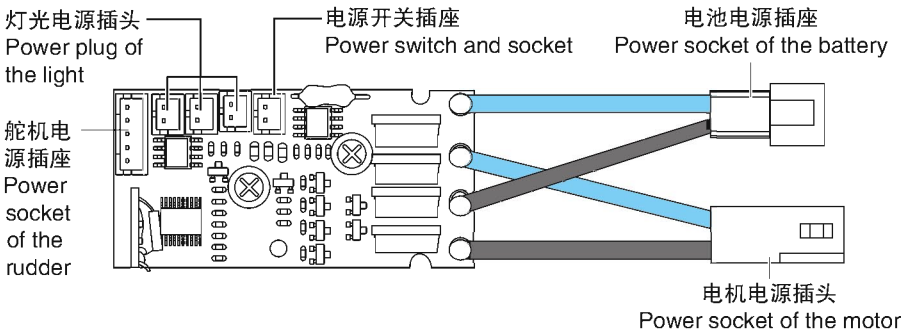

遥控器功能介绍(Transmitter function introduce)

本公司为模型车配置了一个新式遥控器。请仔细阅读说明书上的操作内容。下列是遥控器各功能说明的名称。
Our company has been configured a new-style transmitter for model car. Please read the instruction manual carefully.
The following is the transmitter's description of all functions.

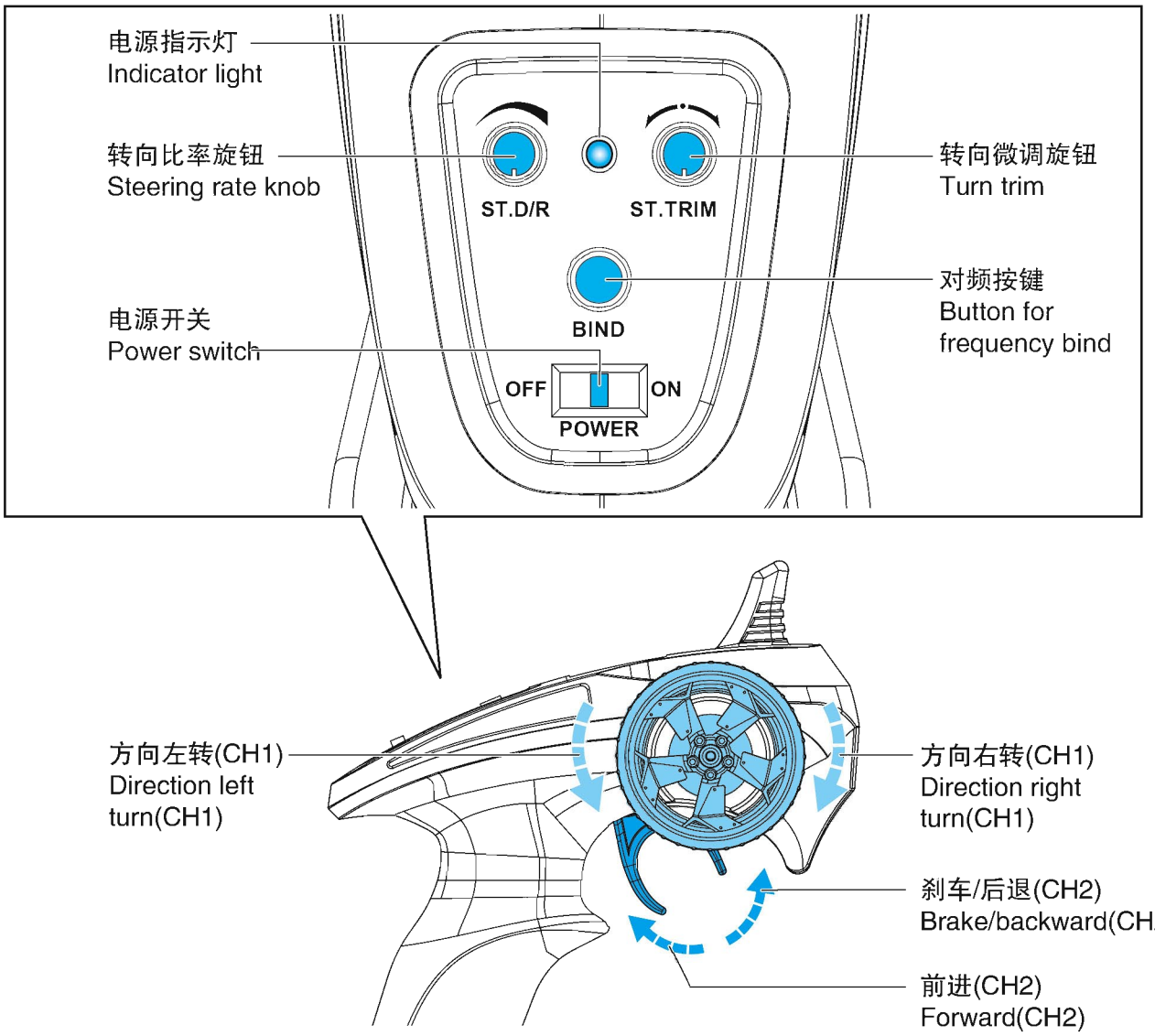

遥控器电池的装配(Assembly of the transmitter battery)

①、移开电池盖
Remove the battery lid.

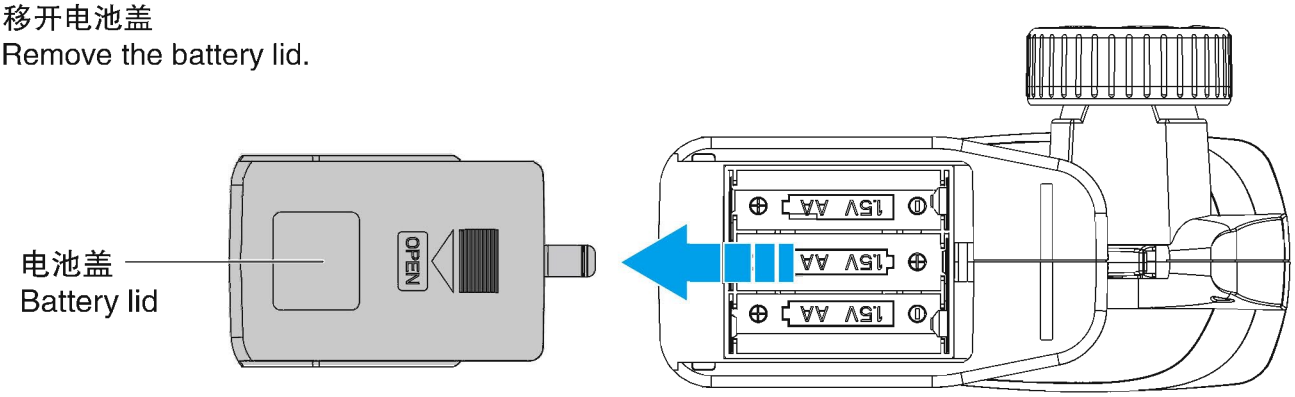

②、如图所示，装入3粒AA号碱性电池。并注意电池正负极是否正确装入。
Load 3 AA–size alkaline batteries as shown in the illustration. Caution: install batteries with correct polarity.

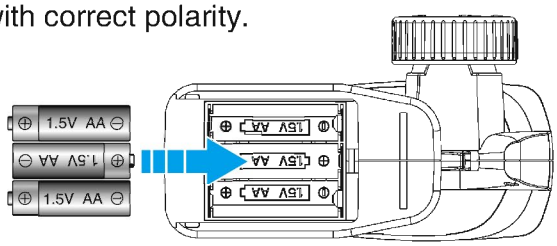

③、如图所示合上电池盖。
Replace the lid as shown.

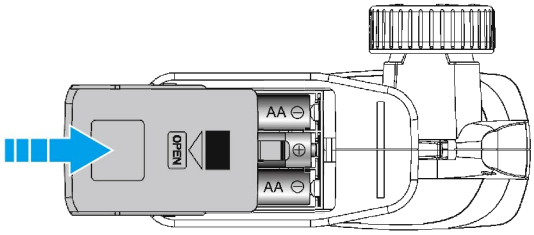

模型电池的充电和装配(Model battery's charging and assembly)

①、充电 Charge

(1)、先将充电器充电接口连接到充电电池插头，再将充电器插头插入电源插座。充电时间为3–4小时。
(2)、充电完毕，把充电器插头拔出。
(1). The first transformer charging port connected to the rechargeable battery plug. Then the adapter plugs into an electrical outlet. The charge time is 3–4 hours.
(2). Disconnect the charger plug after the charge.

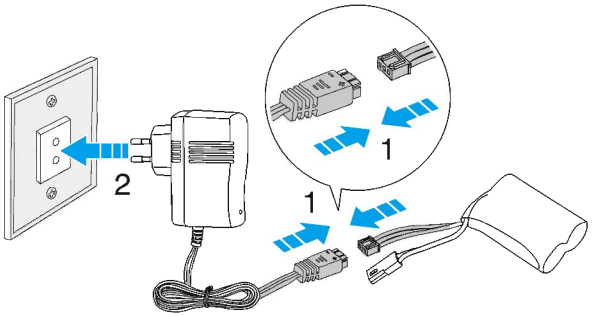

②、打开电池盖 Open the battery cover lid

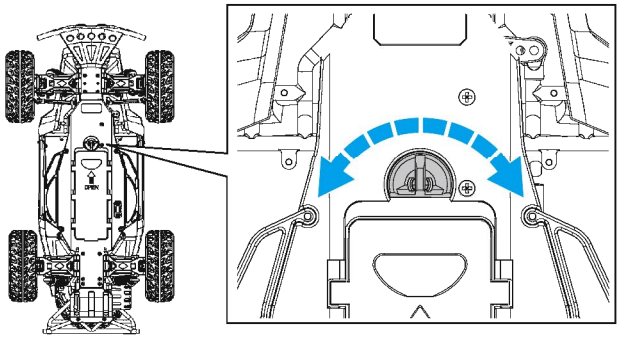

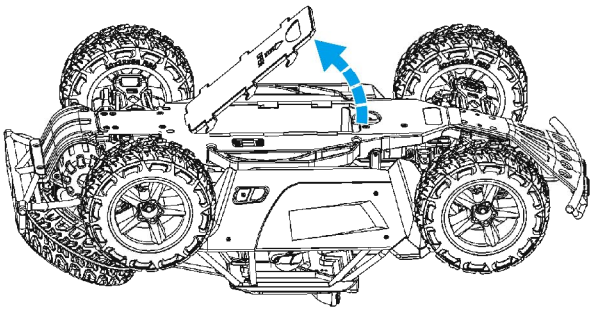

③、安装电池 Installing battery

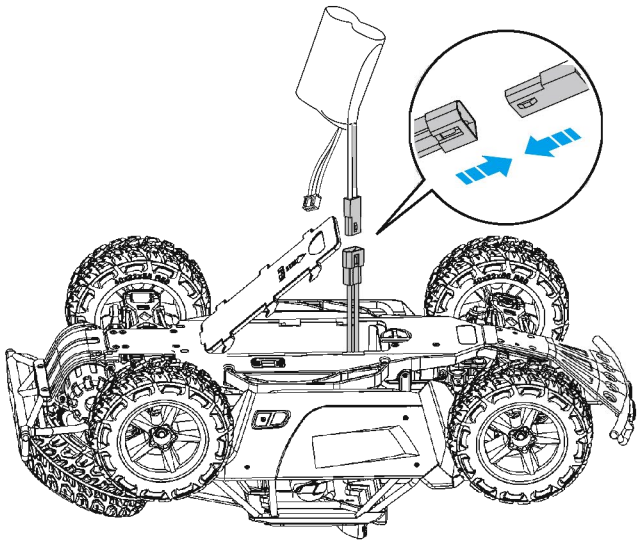

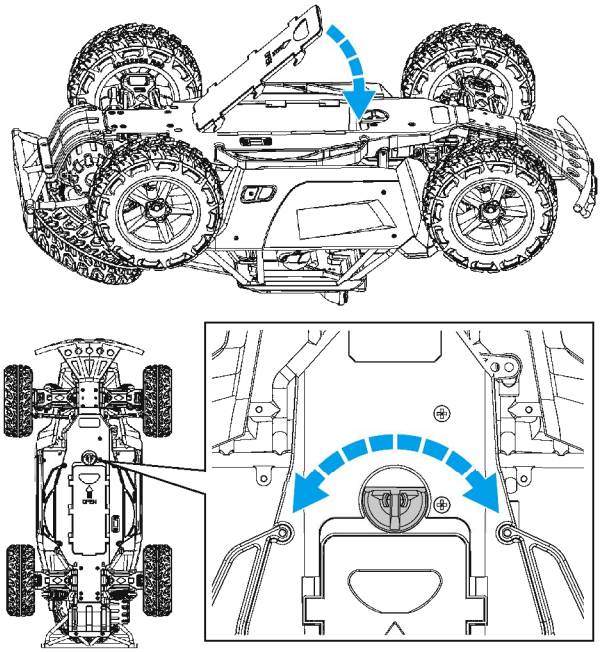

4WD底盘部件组装图 (4WD batholith parts assembly diagram)

2
WLS002 2.0x7mm
沉头螺丝
Countersunk head screw

4
WLS003 2.0x9mm
沉头螺丝
Countersunk head screw

1 前差速器 Front gear differential

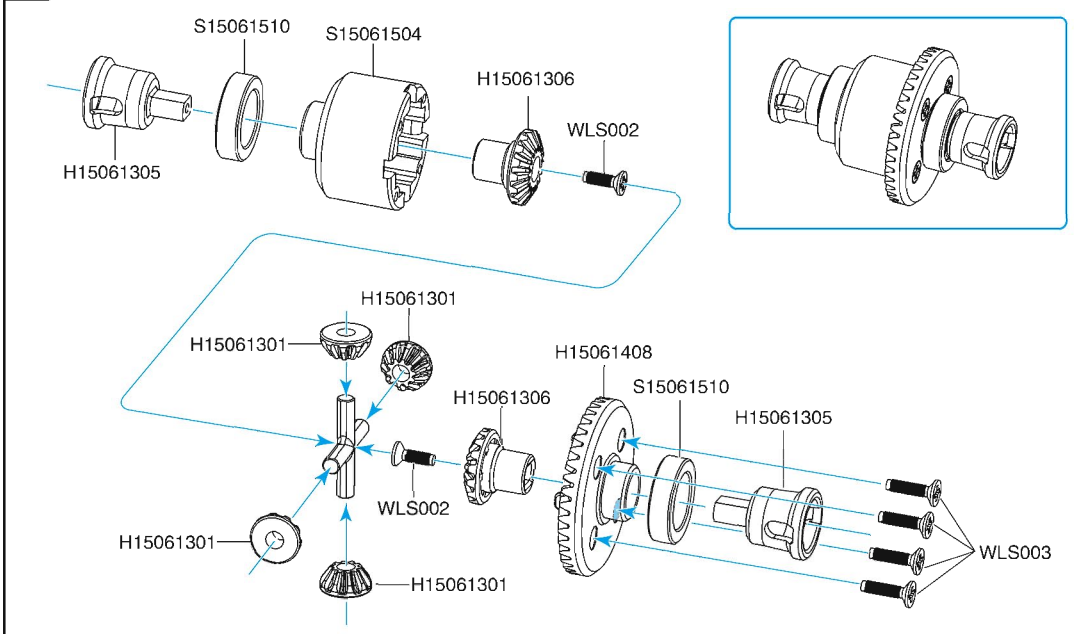

1
WLS008 2.6X8PBmm
平头螺丝
Flat head screw

8
WZC003 7xX11X3mm
滚球轴承
Ball bearing

2 前波箱 Front gearbox

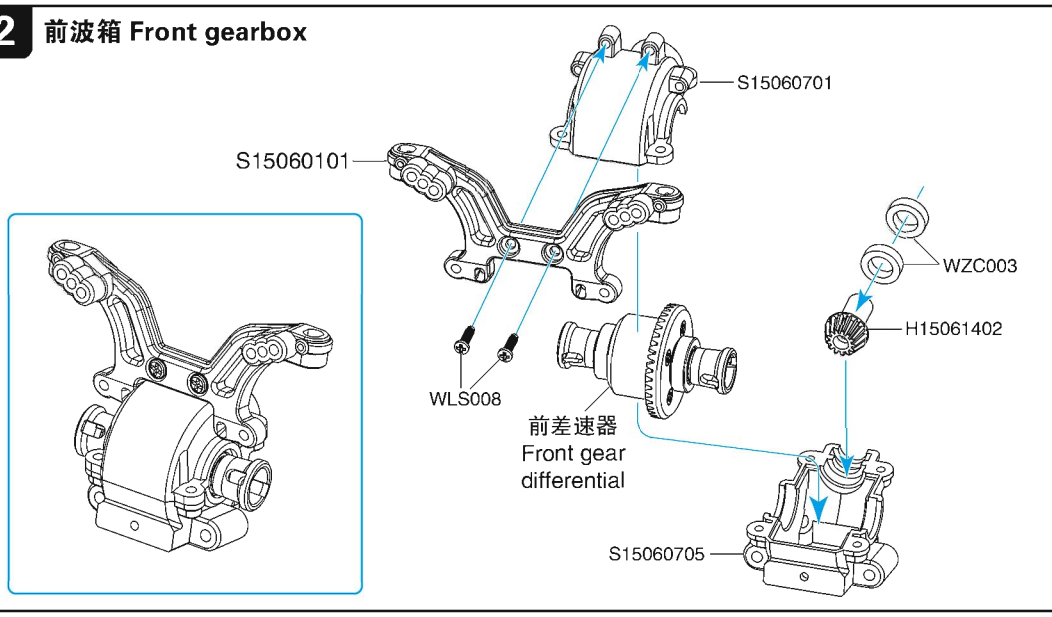

1
WTZ001 Ø1.2X7.5mm
光轴 Optical shaft

3 减震器 Shock absorber

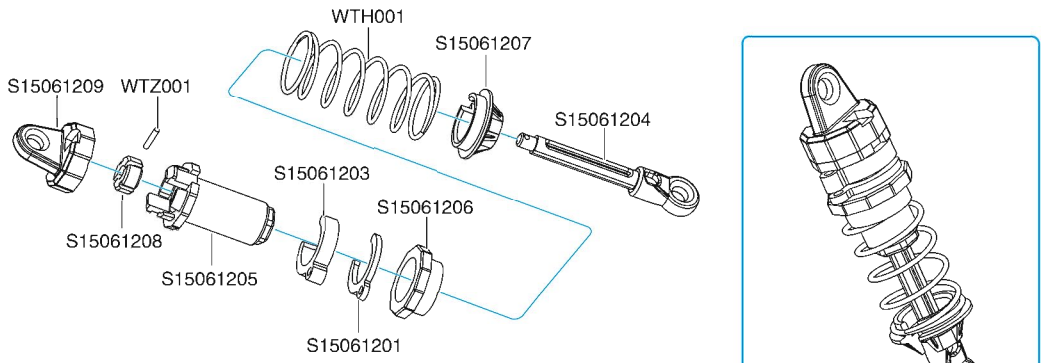

注意： 根据不同地形，可更换不同的调节卡扣，调整弹簧的强度。
Notice: You can replace with different adjusting buckles according to different terrain, please adjust the strength of the spring as well.

WLS005 2.6X5mm 2
沉头螺丝
Countersunk head screw

WLS015 3.0X24mm 2
半牙螺丝
Half thread screw

WLS019 3.0X10mm 12
台阶螺丝 Sidestep Screw

WTD001 Ø3.0X41.5mm 2
轴钉 Shaft screw

WZC002 5X9X3mm 4
滚球轴承 Ball bearing

4 组装前波箱组件 Installation of the front gearbox assembly

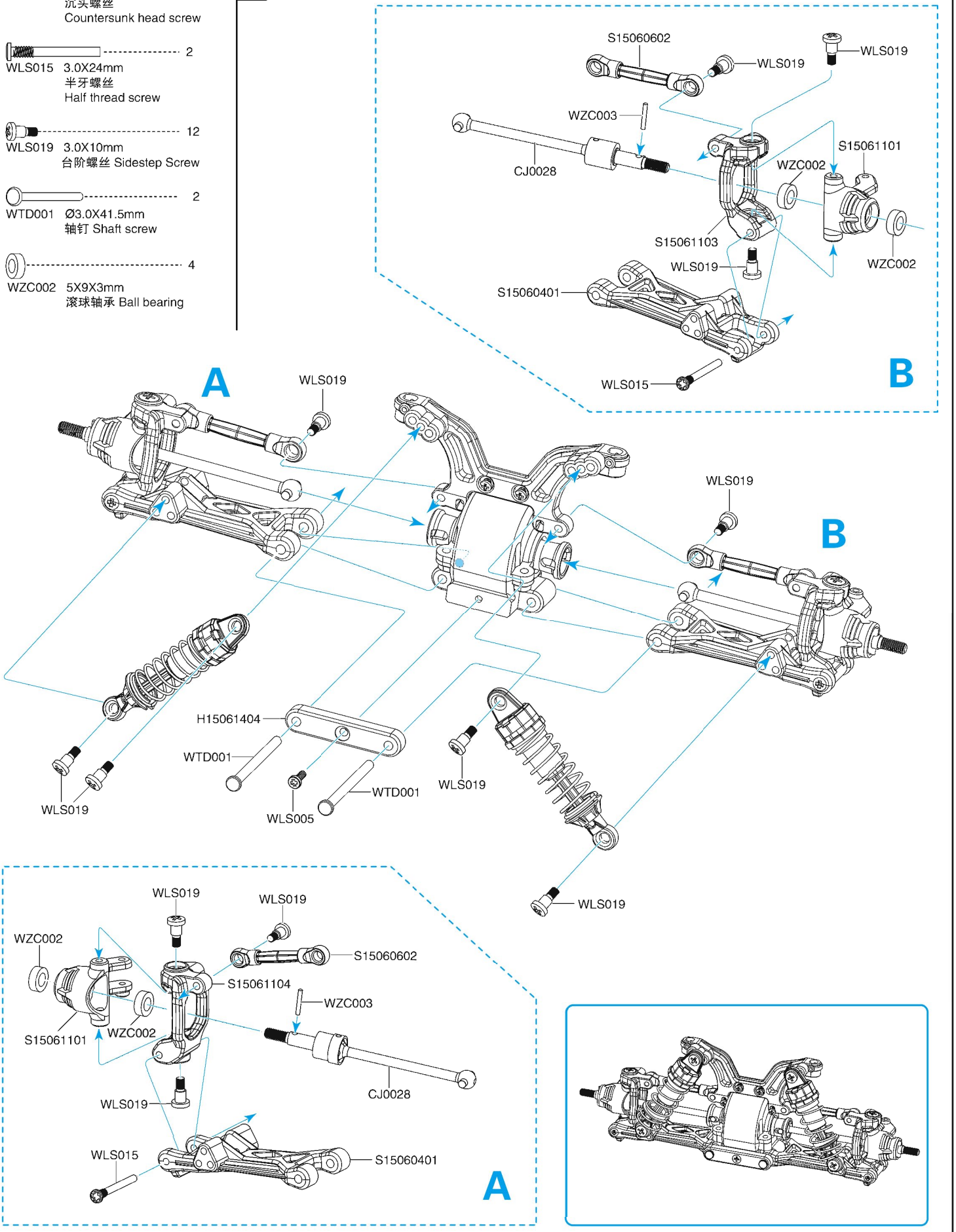

WLS002 2.0X7mm 沉头螺丝 Countersunk head screw ---- 4

WLS003 2.0X9mm 沉头螺丝 Countersunk head screw ---- 4

WZC004 10x15x4mm 滚珠轴承 Ball bearing ---- 2

5 后差速器 Rear gear differential

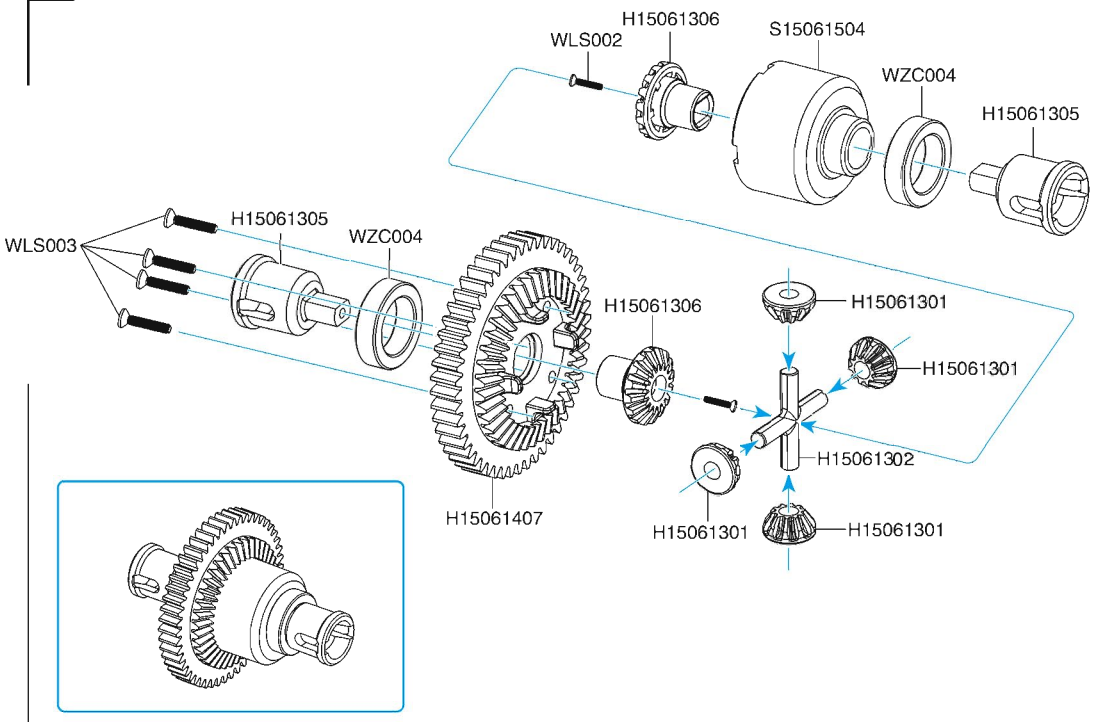

6 后波箱 Rear gearbox

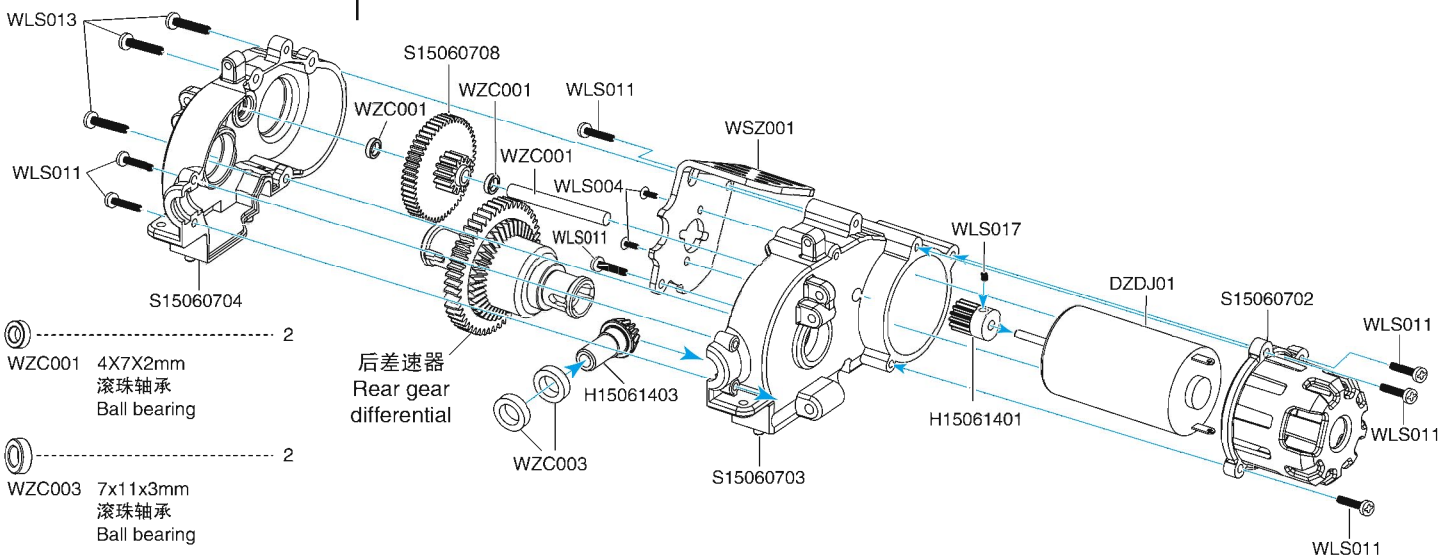

WZC001 4X7X2mm 滚珠轴承 Ball bearing ---- 2

WZC003 7x11x3mm 滚珠轴承 Ball bearing ---- 2

WLS004 2.5X6X6mm 机牙螺丝 Non self-tapping screw ---- 2

WLS008 2.6X8mm 平头螺丝 Flat head screw ---- 2

WLS010 2.6X10mm 平头螺丝 Flat head screw ---- 2

WLS011 2.6X12mm 平头螺丝 Flat head screw ---- 7

WLS013 2.6X14mm 平头螺丝 Flat head screw ---- 3

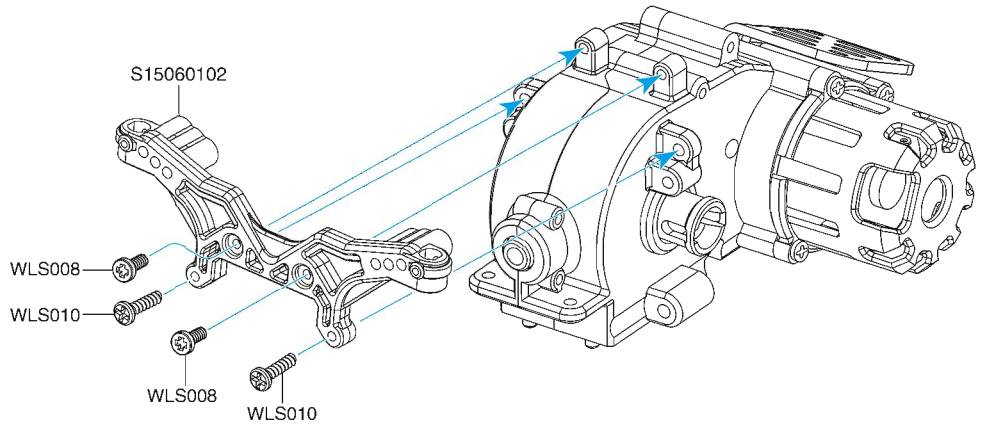

WTZ002 1.5X7.5mm 光轴 Optical shaft ---------- 2

WTZ003 1.5X10mm 光轴 Optical shaft ---------- 2

WLS015 3.0X54.50mm 光轴 Optical shaft ---------- 2

WZC002 5X9X3mm 滚球轴承 Ball bearing ---------- 4

WLS019 3.0X10mm 台阶螺丝 Sidestep Screw ---------- 8

WLS015 3.0X24mm 半牙螺丝 Half thread screw ---------- 2

7 组装后波箱组件 Installation of the rear gearbox assembly

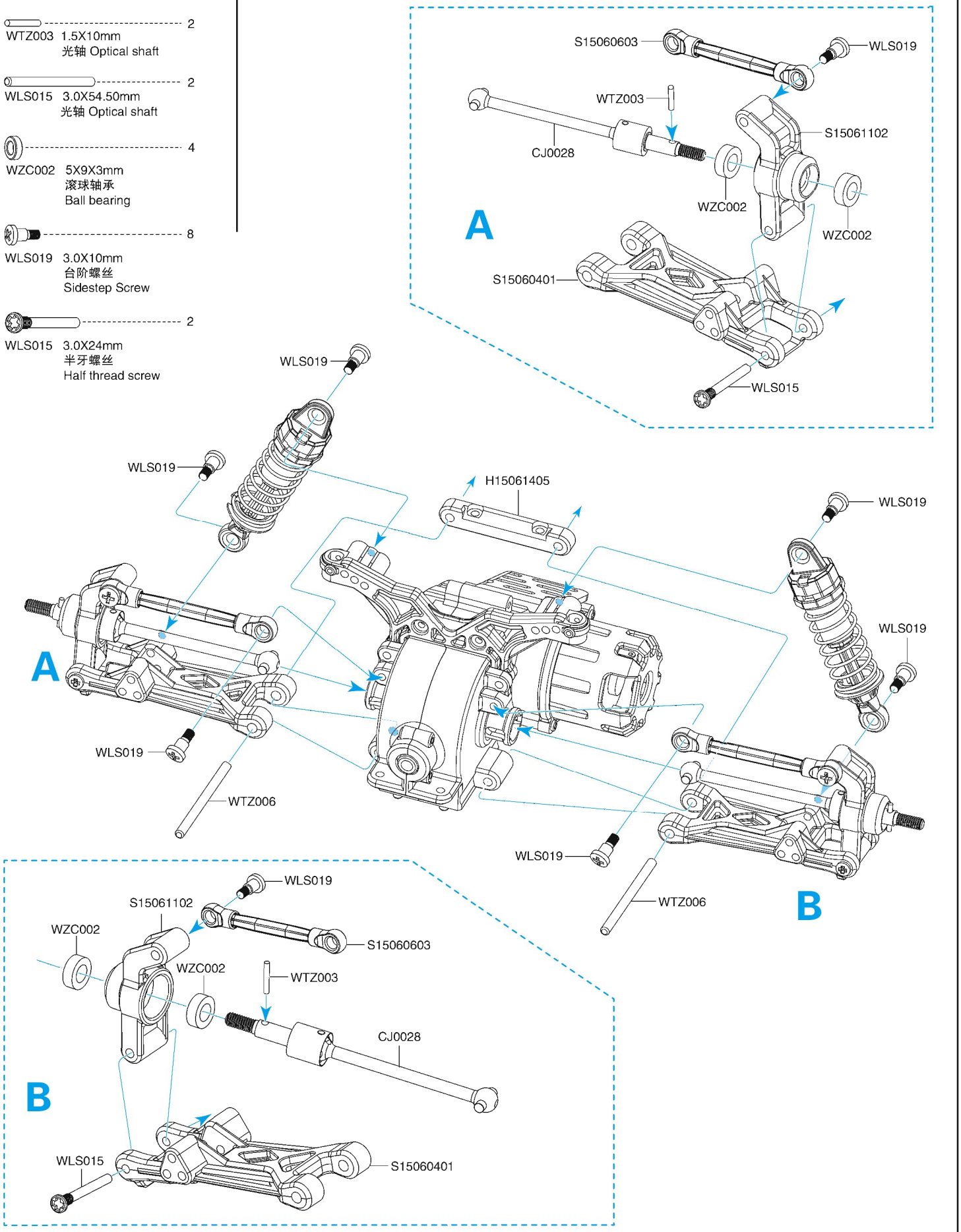

2
WLS008 2.6X8mm
平头螺丝
Flat head screw

2
WLS013 2.6X14mm
平头螺丝
Flat head screw

8 装上后保险架 Install the bumper bracket

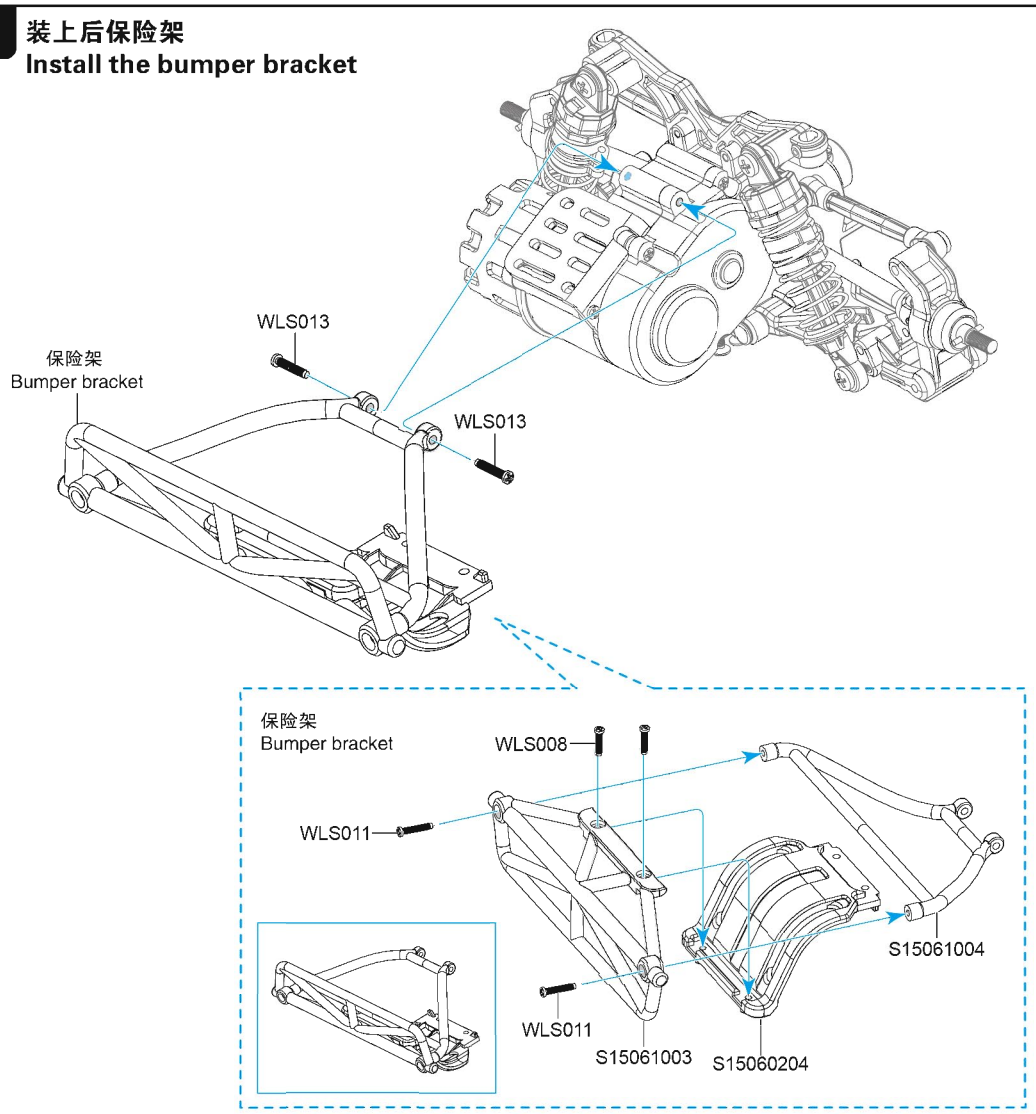

2
WLS001 2.0X4mm
平头螺丝
Flat head screw

2
WLS011 2.6X12mm
平头螺丝
Flat head screw

1
WLS018 2.5X5mm
球头螺丝
Ball head screw

1
WLS020 2.5X7mm
沉头螺丝
Countersunk head screw

2
WLS021 2.5X7mm
平头螺丝
Flat head screw

9 组装底盘 Assemble the chassis

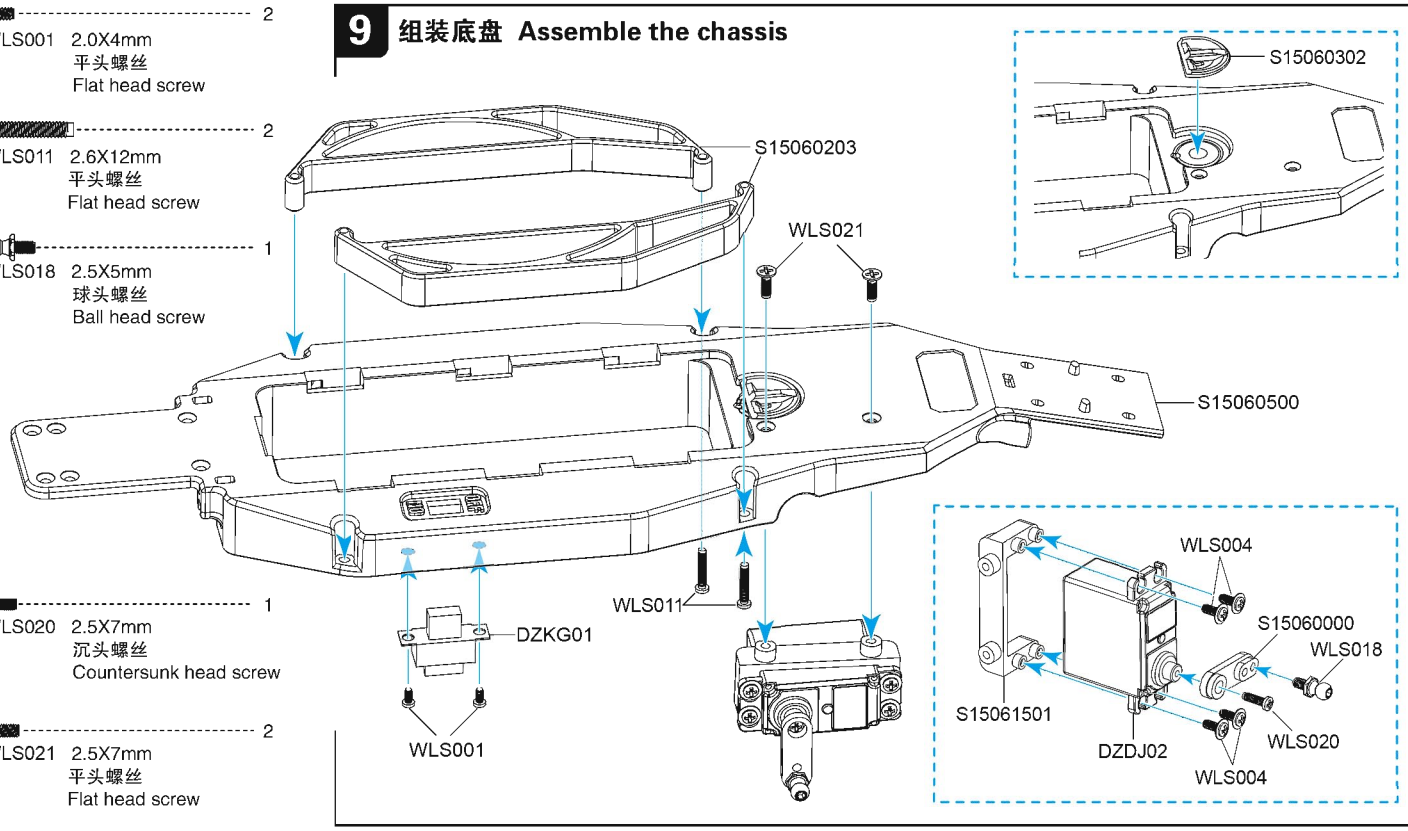

4
WLS011 2.6X12mm
平头螺丝 Flat head screw

2
WLS013 2.6X14mm
平头螺丝 Flat head screw

10 装上前保险组件 Install the front bumper components

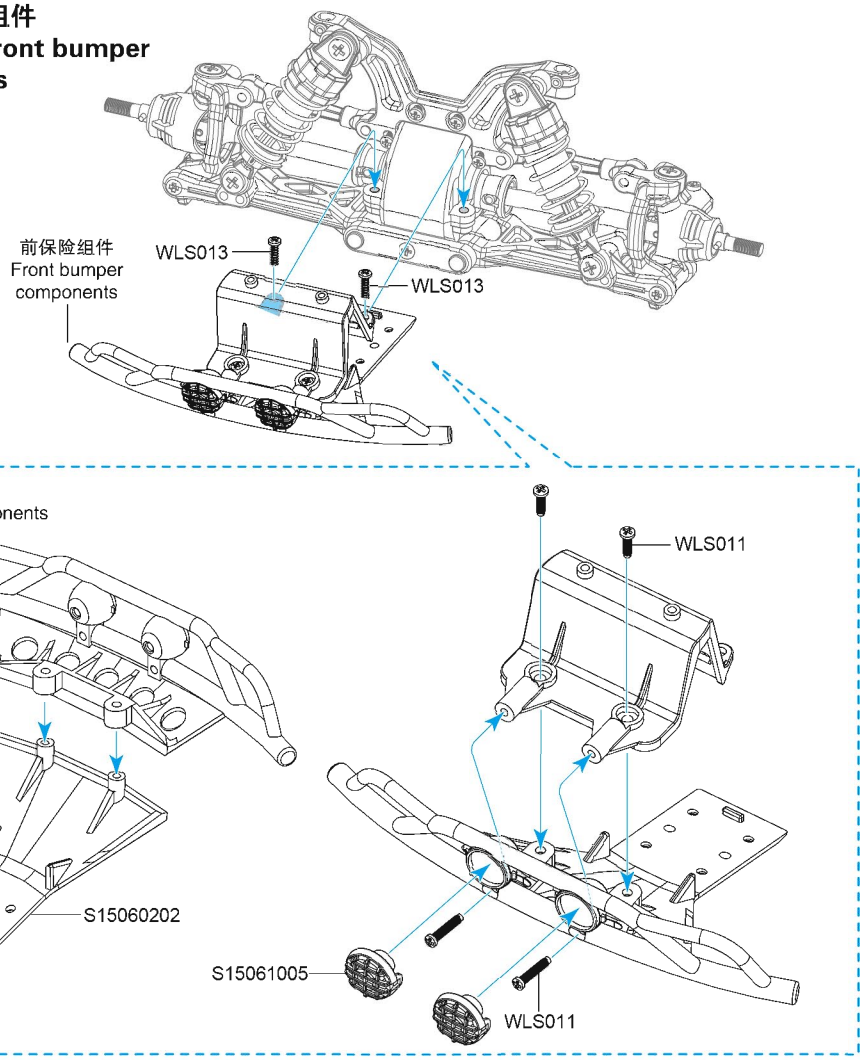

4
WLS009 2.6X10mm
沉头螺丝
Countersunk head screw

11 将前驱动组件装到底盘上 Install the front drive components on the chassis

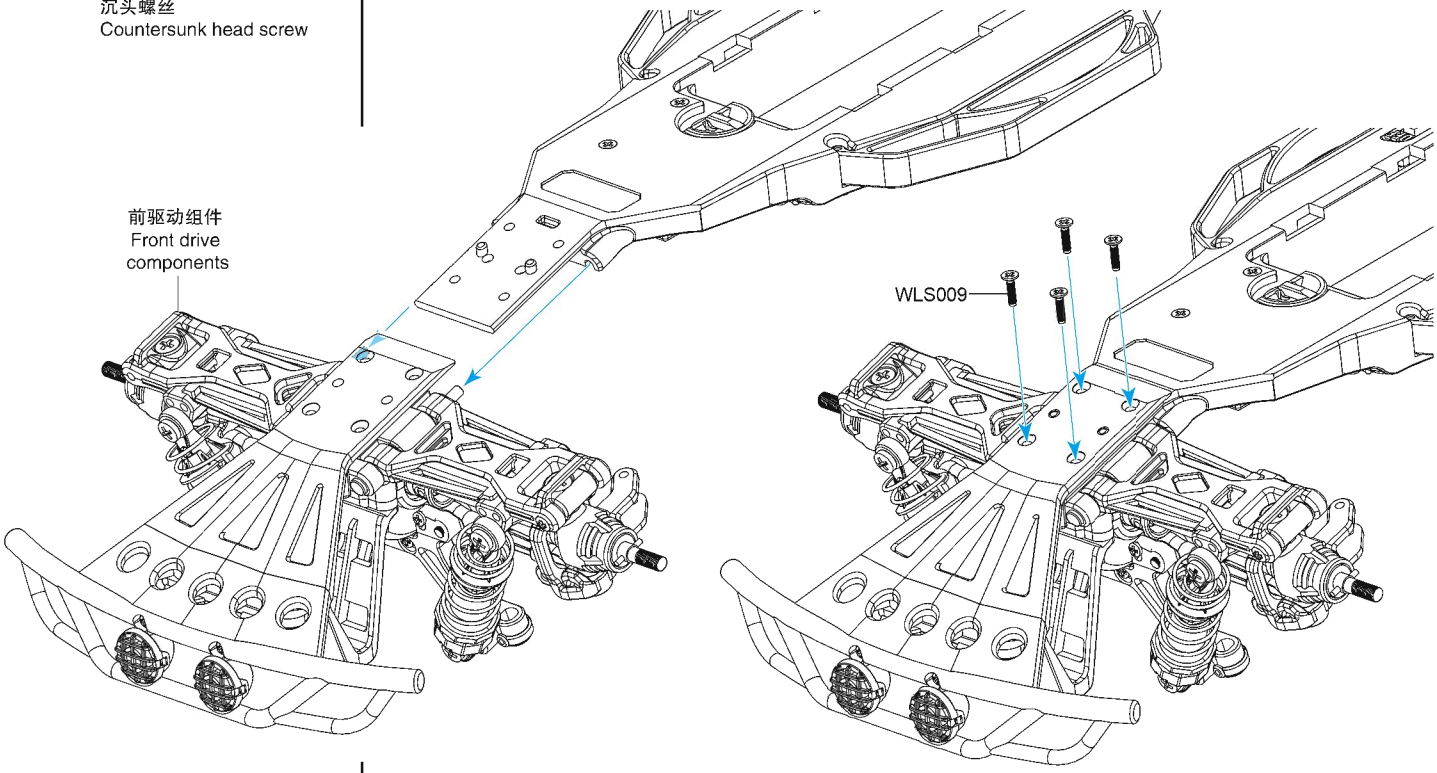

12 组装转向组件 Assemble the steering components

WTZ005 4.0X35mm 钢管 Steel pipe — 2

WLS014 2.6X16 半牙螺丝 Half thread screw — 2

WLS018 2.5X5mm 球头螺丝 Ball head screw — 3

WTT001 4.8X6.8mm 球头套 Ball head sleeve — 2

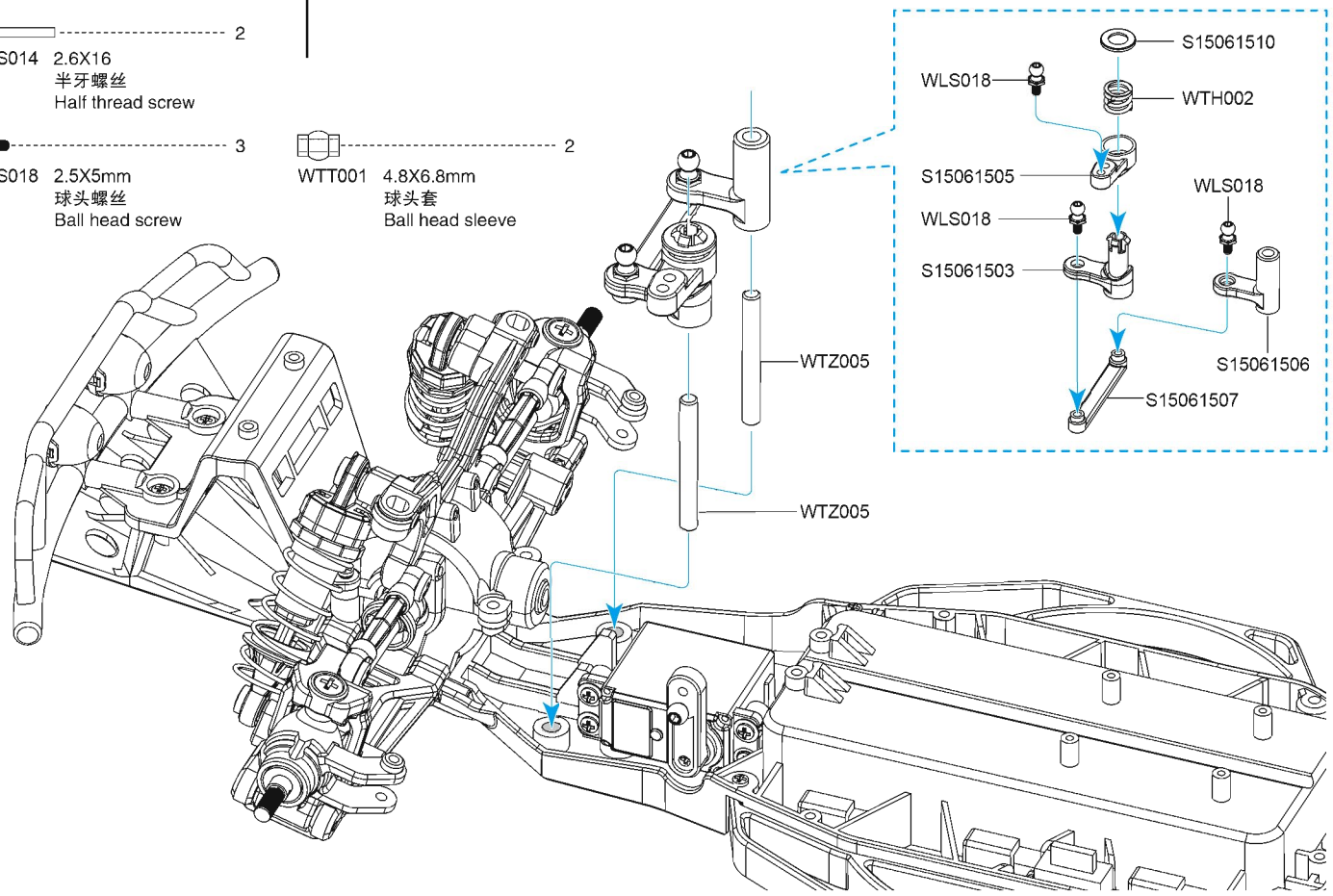

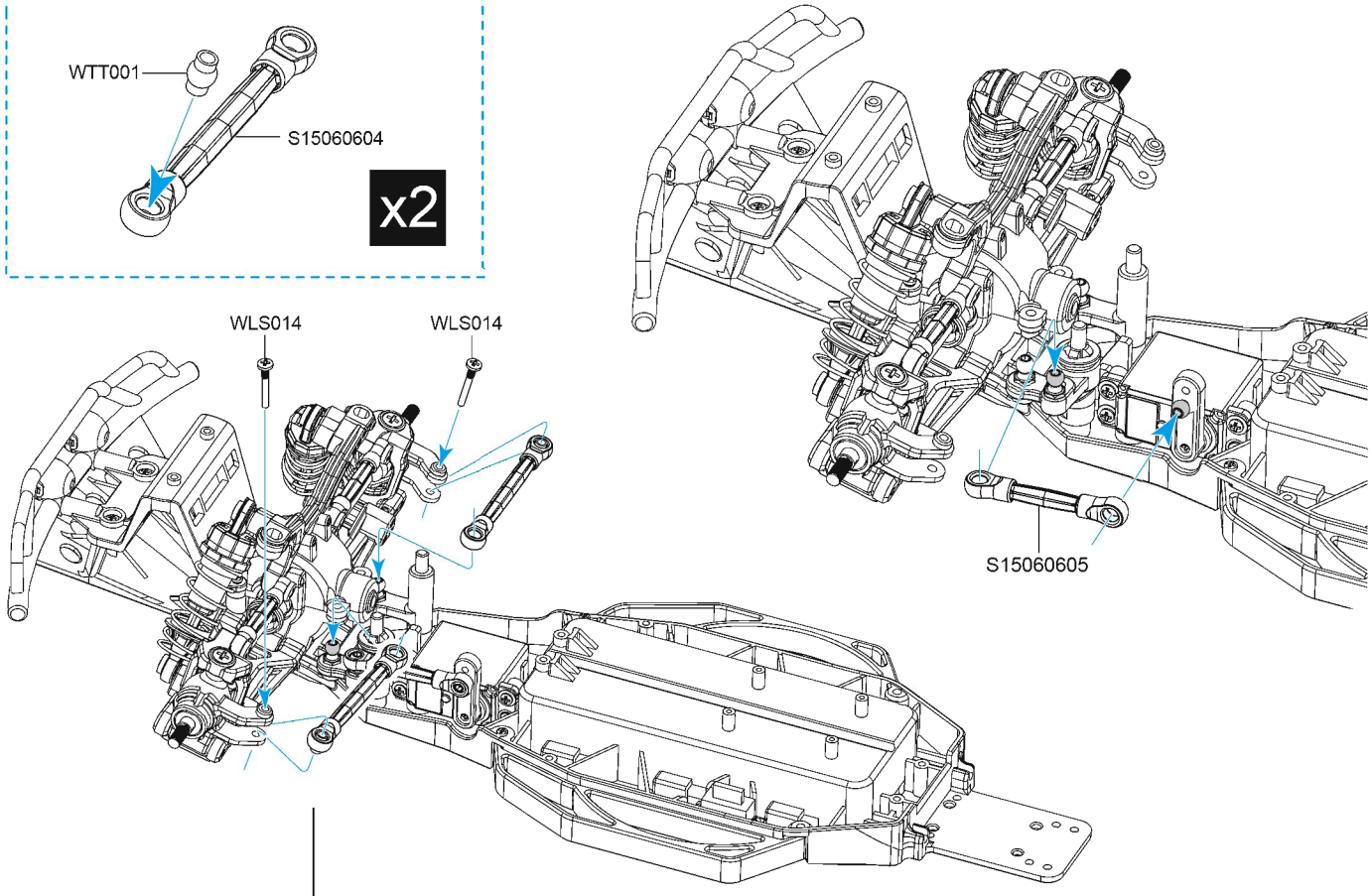

2
WLS011 2.6X12mm
平头螺丝
Flat head screw

2
WLS006 2.6X5mm
平头螺丝
Flat head screw

13 安装转向压件 Assemble the steering pressed parts

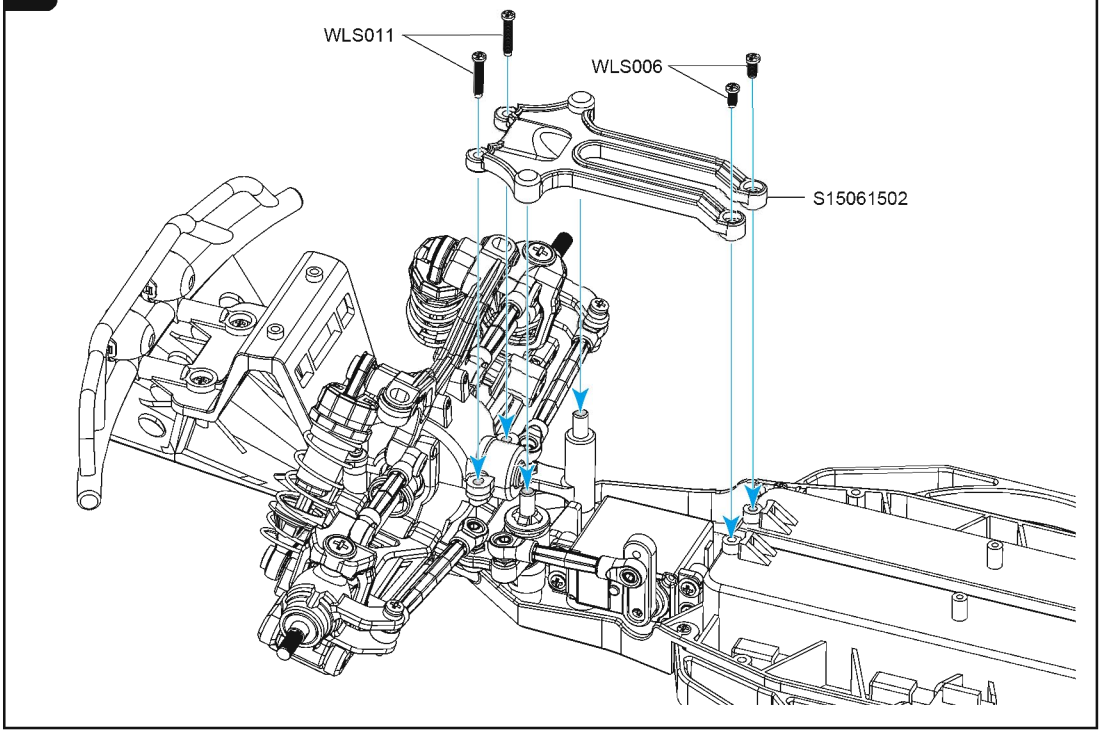

4
WLS009 2.6X10mm
沉头螺丝
Countersunk head screw

2
WLS011 2.6X12mm
平头螺丝
Flat head screw

2
WLS012 2.6X14mm
沉头螺丝
Countersunk head screw

14 将后驱动组件装到底盘上 Install the rear drive components on the chassis

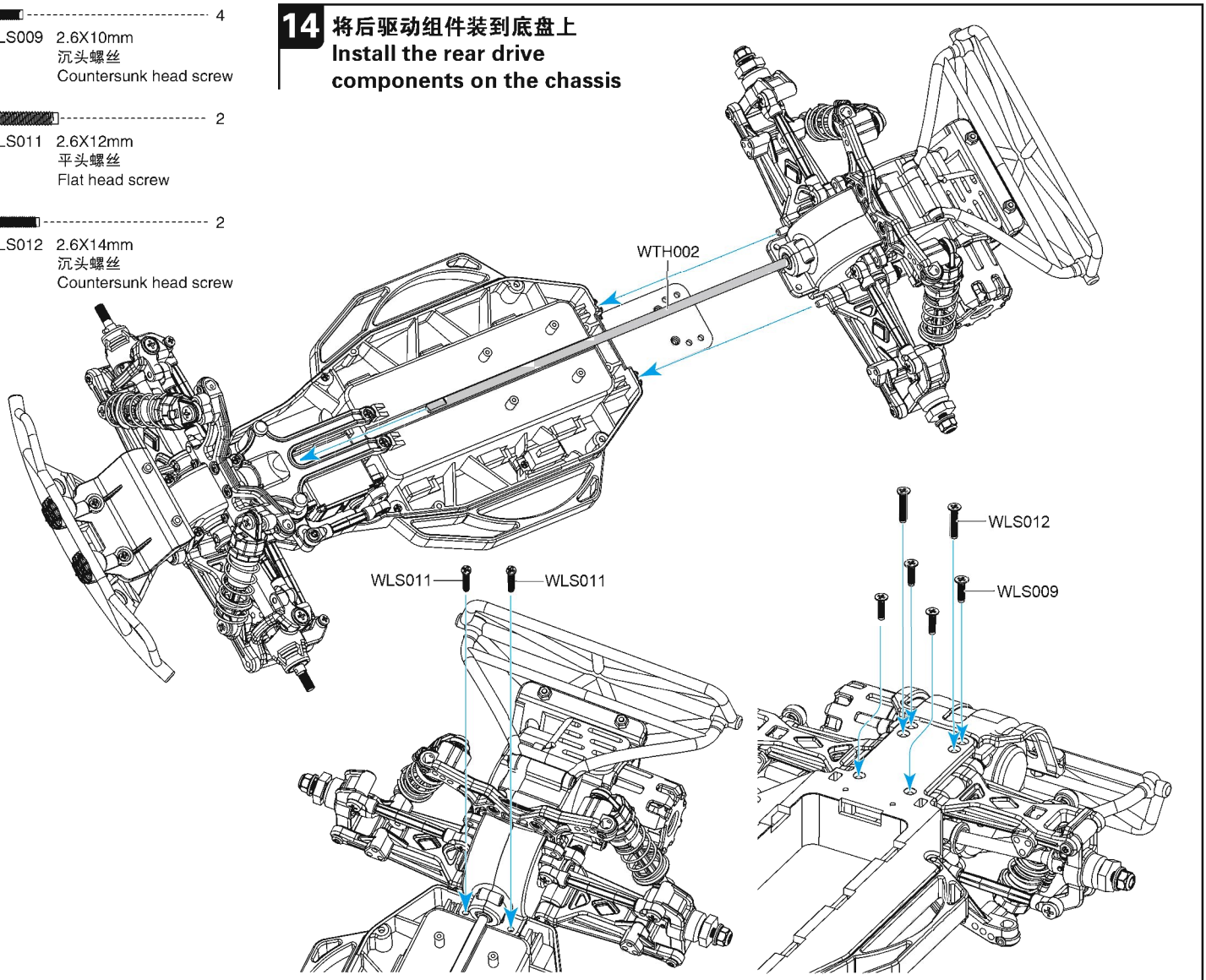

15 安装电子调速器
Install the electric speed governor

灯光电源插头
Power plug of the light

开关电源插头
Power plug of the switch

舵机电源插头
Power plug of the rudder

电子调速器
Electric speed governor

WLS008

S15060303

WLS013

电子调速器插头
Plug of the electric speed governor

电机电源插座
Power socket of the motor

WLS002

DZDB01

4
WLS002 2.0X7mm
沉头螺丝
Countersunk head screw

2
WLS008 2.6X8mm
平头螺丝
Flat head screw

2
WLS013 2.6X14mm
平头螺丝
Flat head screw

16 将电池盖装到底盘上
Install the battery cover lid on the chassis

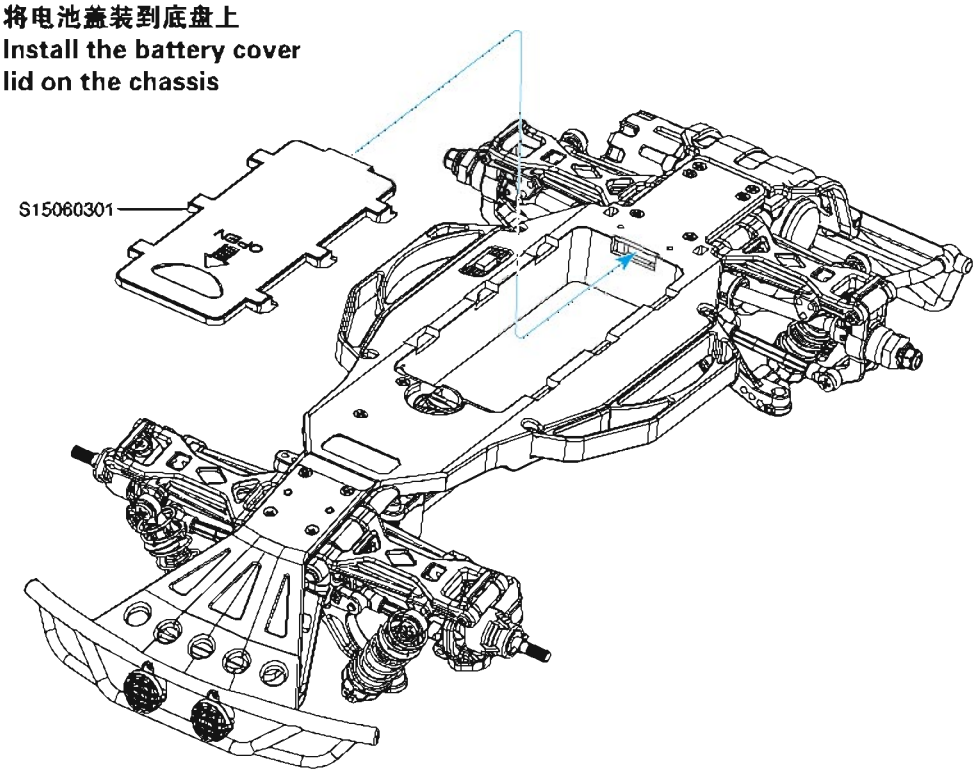

4
WLM001 M4 防松螺母
M4 lock nut

17 将轮胎装到底盘上
Install the tires on the chassis

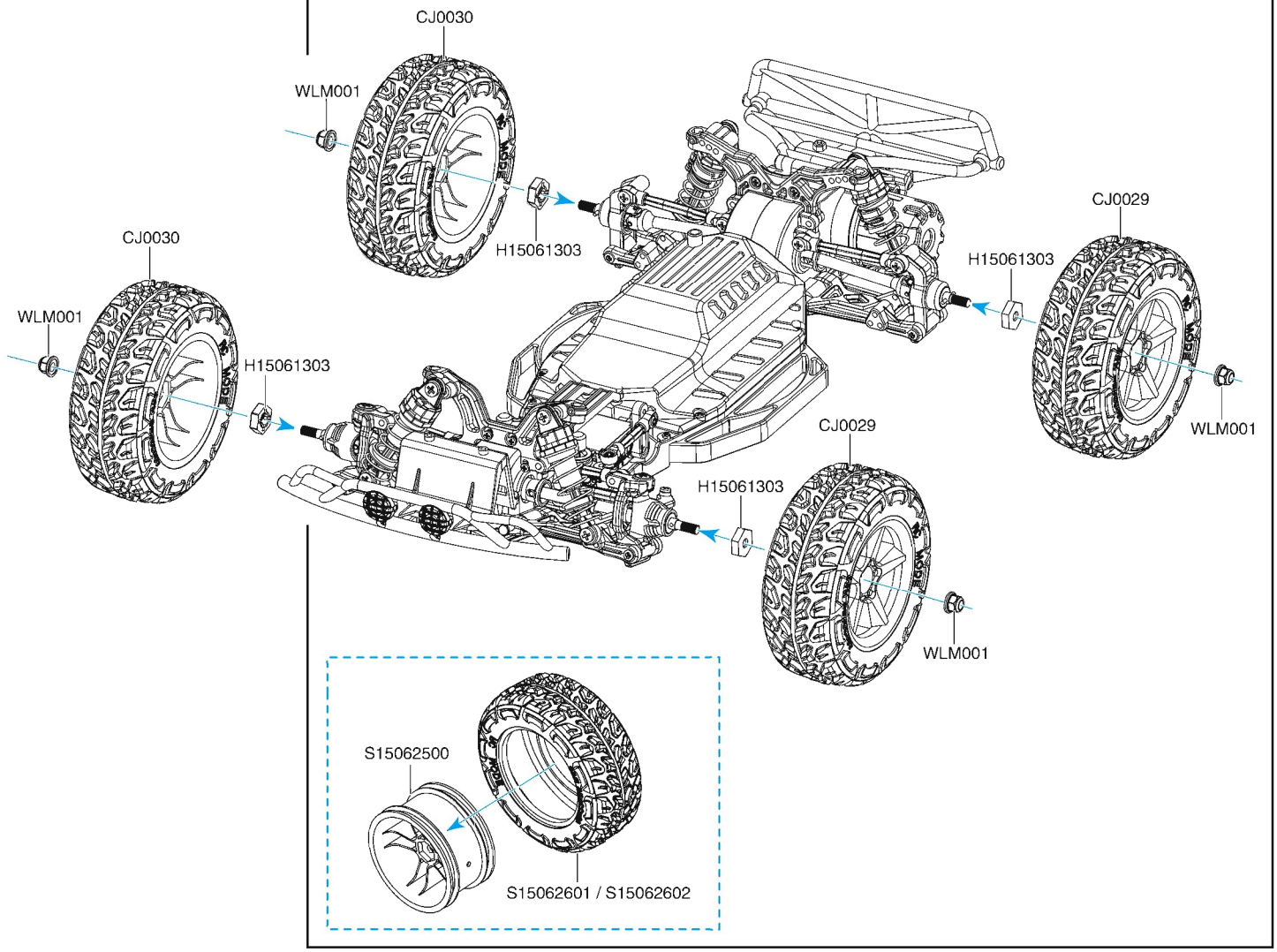

1
WLM001 M4 防松螺母
M4 lock nut

18 将备用轮胎装到车壳上
Install the spare tire onto the case

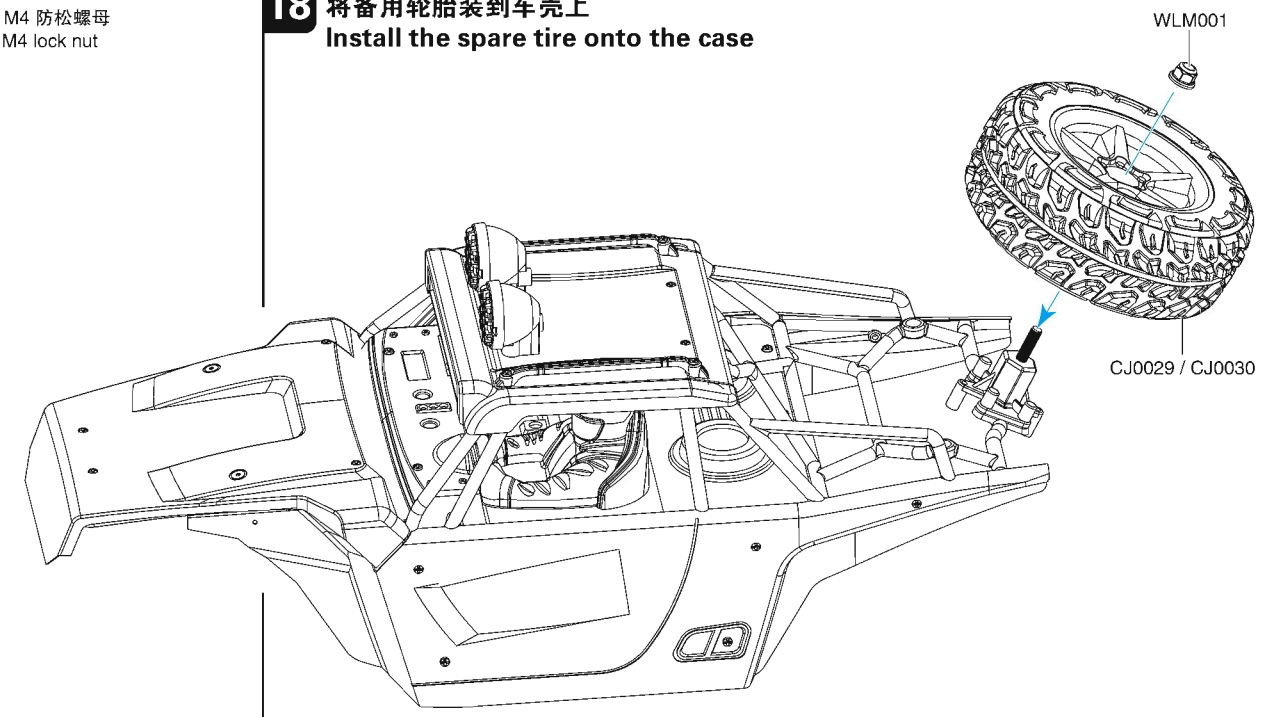

WTZ008 锁扣 Lock catch ---------- 4

WLS002 2.0X7mm 沉头螺丝 Countersunk head screw ---------- 4

WLS004 2.0X6X6mm 机牙螺丝 Non self-tapping screw ---------- 2

19 安装支撑架和车壳
Install the support frame and car shell

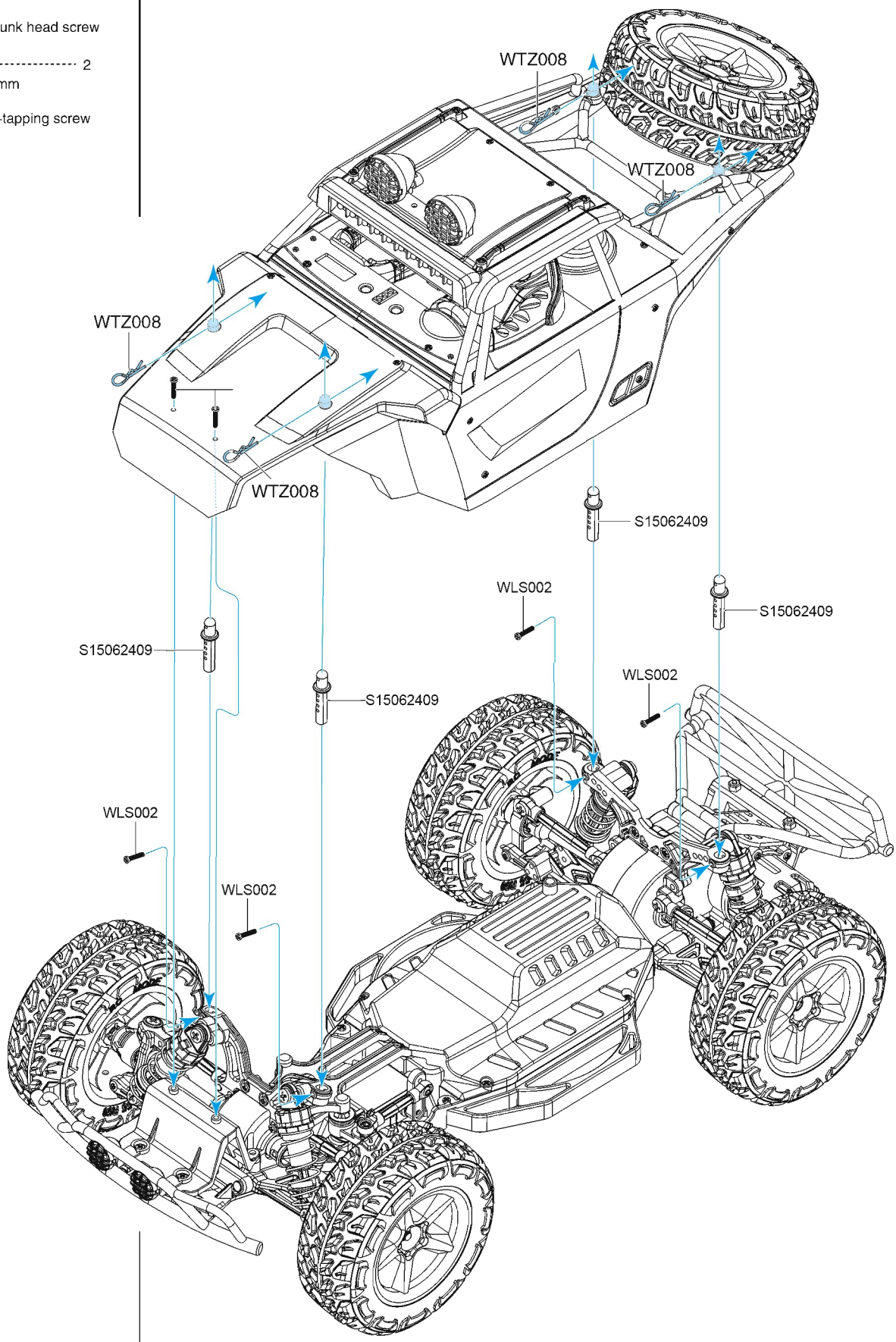

高速车配件表 Spare parts list of high speed vehicles

S15060101

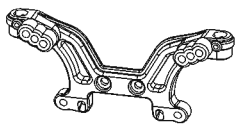

前减震桥
Front shock absorption bridge

S15060102

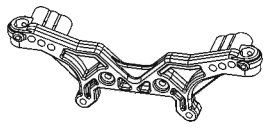

后减震桥
Rear shock absorption bridge

S15060202

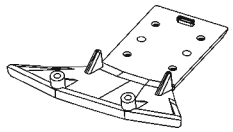

前保险底架
Bottom front bumper bracket

S15060203

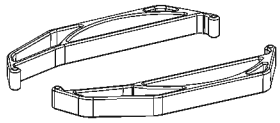

底盘侧杠
Side bar of the chassis

S15060204

后保险底架
Bottom rear bumper bracket

S15060301

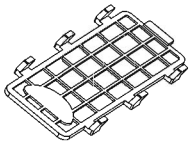

车底电池盖
Cover lid of the bottom battery

S15060302

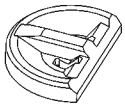

电池旋钮锁扣
Battery knob lock catch

S15060303

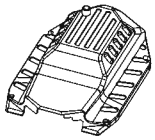

电板上罩
Upper covering of the circuit board

S15060401

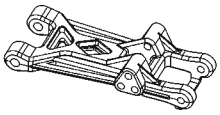

摆臂
Swing arm

S15060500

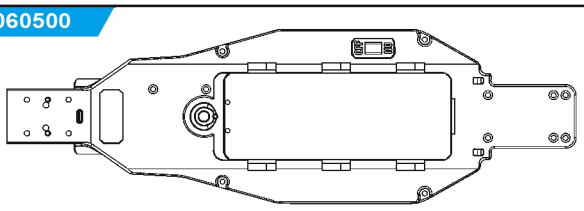

车底
Vehicle bottom

S15060602

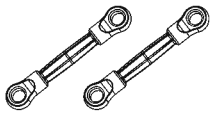

前连杆
Front connecting rod

S15060603

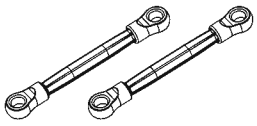

后连杆
Rear connecting rod

S15060604

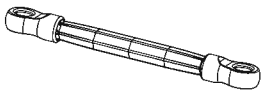

转向连杆
Steering connecting rod

S15060605

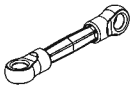

舵机连杆
Rudder connecting rod

S15060701

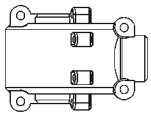

前差速箱上壳
Upper shell of the front differential case

S15060702

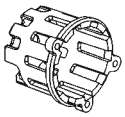

电机护盖
Protective covering of the motor

S15060703

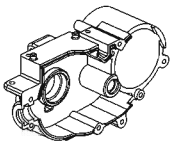

后牙箱左壳
Left shell of the rear gearbox

S15060704

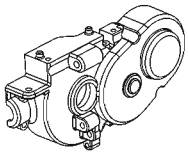

后牙箱右壳
Right shell of the rear gearbox

S15060705

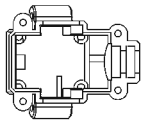

前差速箱底壳
Bottom shell of the front differential case

S15061101

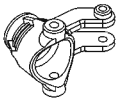

转向块
Steering stop

S15061102

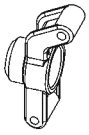

后轮座
Rear wheel seat

S15061103

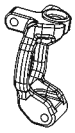

C型座
C-shape seat

S15061201

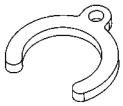

减震调节环(小)
Shock regulation ring (small)

S15061202

减震调节环(中)
Shock regulation ring (medium)

S15061203

减震调节环(大)
Shock regulation ring (large)

S15061204

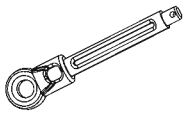

避震中轴
Anti–vibration medial axis

S15061205

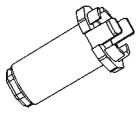

避震主体
Principal anti–vibration part

S15061206

弹簧上套
Upper sleeve of the spring

S15061207

弹簧下套
Lower sleeve of the spring

S15061208

减震塞
Shock absorption plug

S15061209

上盖
Top cover

H15061301

小伞齿
Small bevel gear

H15061302

十字轴
Cross

H15061303

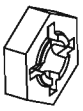

六角轮座
Hexagon wheel seat

H15061304

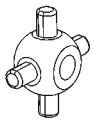

十字万向结
Cross universal joint

H15061305

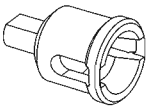

驱动连接杯
Drive connecting cup

H15061306

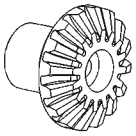

从动伞齿
Driven bevel gear

H15061401

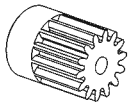

电机齿轮
Motor gear

H15061402

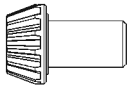

前差速主动齿
Driving gear of the front differential case

H15061403

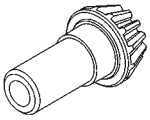

后差速主动齿
Driving gear of the rear differential case

H15061404

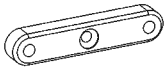

前摆臂连接件
Connectors of the front swing arm

H15061405

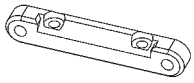

后摆臂连接件
Connectors of the rear swing arm

H15061407

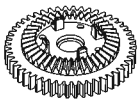

后差速从动齿轮
Driven gear of the rear differential case

H15061408

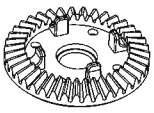

前差速从动齿轮
Driven gear of the front differential case

S15061501

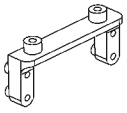

舵机固件
Rudder fasteners

S15061502

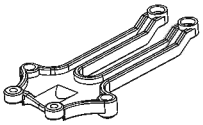

转向压件
Steering pressed parts

S15061503

离合座
Clutch race

S15061504

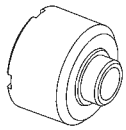

差速壳
Shell of the differential case

S15061505

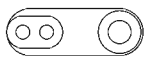

舵机臂
Rudder arm

S15061506

T型轴承
T-shape bearing

S15061507

转向连接桥
Steering connect bridge

S15061508

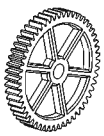

减速齿轮
Speed reduction gear

S15061509

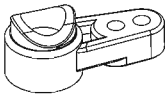

离合套
Clutch sleeve

S15061510

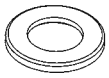

离合固定环
Clutch retaining ring

S15061001

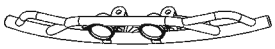

短卡前防撞架
Front anti-collision frame of short-course truck

S15061003

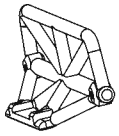

后防撞架
Rear anti-collision frame

S15061004

后防撞支件
Rear anti-collision strut

S15061005

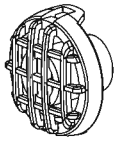

前灯罩
Front lamp cover

S15062201

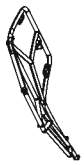

左护架
Left protective cage

S15062202

右护架
Right protective cage

S15062301

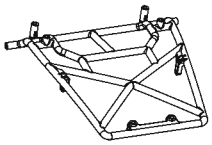

前顶架
Front roof rack

S15062302

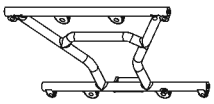

后轮胎架
Rear tire rack

S15062303

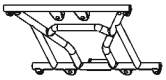

车顶架
Roof rack

S15062401

长排灯面
Light bar cover

S15062402

车顶条
Top strap

S15062403

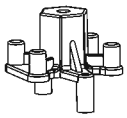

备胎座
Spare tire seat

S15062404

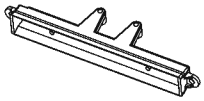

长灯座
Light bar adapter

S15062405

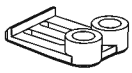

卡位
Booth seat

S15062406

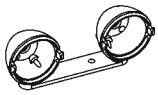

大灯座
Large lamp holder

S15062407

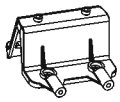

前防撞支架
Front bumper

S15062408

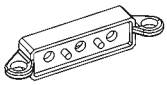

短排灯件
Mini light bar

S15062409

后支架
Rear bracket

S15062410

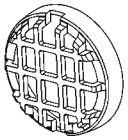

大灯盖
Large lamp cover

S15062411

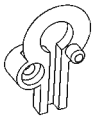

左大灯后盖
Rear cover of the left lamp

S15062412

右大灯后盖
Rear cover of the right lamp

S15062500

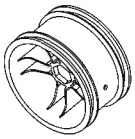

轮轱
Hub

S15062601

左轮皮
Left wheel skin

S15062602

右轮皮
Right wheel skin

S15130001

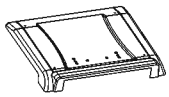

顶板
Top board

S15130002

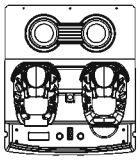

座椅板
Seat plate

S15130003

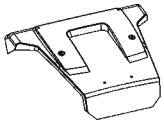

前面板
Front Panel

S15130004

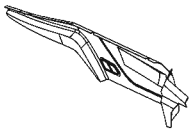

左侧板
Left side panel

S15130005

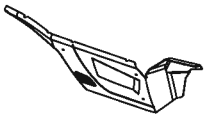

右侧板
Right side panel

WLS001

2.0X4PB

2.0X4 平头螺丝
2.0X4 Flat head screw

WLS002

2.0X7KB

2.0X7 沉头螺丝
2.0X7 Countersunk head screw

WLS003

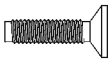

2.0X9KB

2.0X9 沉头螺丝
2.0X9 Countersunk head screw

WLS004

2.5X6X6PWB

2.5X6介6机牙螺丝
2.5X6 shell 6 Non self-tapping

WLS005

2.6X5KB

2.6X5 沉头螺丝
2.6X5 Countersunk head screw

WLS006

2.6X5PB

2.6X5 平头螺丝
2.6X5 Flat head screw

WLS007

2.6X7PB

2.6X7 平头螺丝
2.6X7 Flat head screw

WLS008

2.6X8PB

2.6X8 平头螺丝
2.6X8 Flat head screw

WLS009

2.6X10KB

2.6X10 沉头螺丝
2.6X10 Countersunk head screw

WLS010

2.6X10PB

2.6X10 平头螺丝
2.6X10 Flat head screw

WLS011

2.6X12PB

2.6X12 平头螺丝
2.6X12 Flat head screw

WLS012

2.6X14KB

2.6X14 沉头螺丝
2.6X14 Countersunk head screw

WLS013

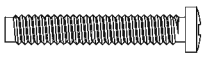

2.6X14PB

2.6X14 平头螺丝
2.6X14 Flat head screw

WLS014

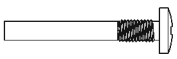

2.6X16

2.6X16 半牙螺丝
2.6X16 Half thread screw

WLS015

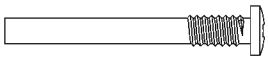

3.0X24BY

3.0X24 半牙螺丝
3.0X24 Half thread screw

WLS016

3.0X6PM

3.0X6 机牙螺丝
3.0X6 Non self-tapping screw

WLS017

3.0X4

内六角钻粒螺丝
Hexagon socket shot screw

WLS018

球头螺丝
Ball head screw

WLS019

3.0X10PB

T头台阶螺丝
T head step screw

WLS026

2.0X6PB

2.0X6 平头螺丝
2.0X6 Flat head screw

WLS027

2.0X10PB

2.0X10 平头螺丝
2.0X10 Flat head screw

WLS035

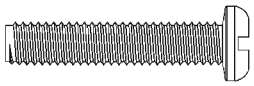

4.0X16PM

4.0X16 机牙螺丝
4.0X16 Non self-tapping screw

WTZ001

Ø1.2X7.5

1.2X7.5 光轴
1.2X7.5 Optical shaft

WTZ002

Ø1.5X7.5

1.5X7.5 光轴
1.5X7.5 Optical shaft

WTZ003

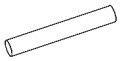

Ø1.5X10

1.5X10 光轴
1.5X10 Optical shaft

WTZ004

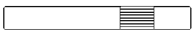

Ø4.0X33

4.0X33 滚花轴
4.0X33 Knurling shaft

WTZ005

Ø4.0X35

4.0X35 铁轴
4.0X35 Steel pipe

WTZ006

Ø3.0X54.50

3.0X54.50 光轴
3.0X54.50 Optical shaft

WTZ008

R型锁扣
R-shape lock catch

WTD001

Ø3.0X41.5

3X41.5 轴钉
3X41.5 Shaft screw

WTH001

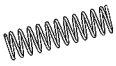

Ø1.1X内Ø13.5XL46

减震压力弹簧
Shock absorption pressure spring

WTH002

Ø1.3X内Ø7.1XL10

离合压力弹簧
Clutch pressure spring

WTT001

4.8X6.8 球头套
4.8X6.8 Ball head sleeve

WLM001

M4

法兰阻尼防松螺母
Flange nut

WZC001

4X7X2

4X7X2mm 滚珠轴承
4X7X2mm Ball bearing

WZC002

5X9X3

5X9X3mm 滚珠轴承
5X9X3mm Ball bearing

WZC003

7X11X3mm 滚珠轴承
7X11X3mm Ball bearing

WZC004

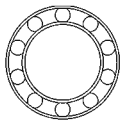

10X15X4mm 滚珠轴承
10X15X4mm Ball bearing

WSZ001

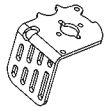

电机散热片
Motor cooling fin

WTZ007

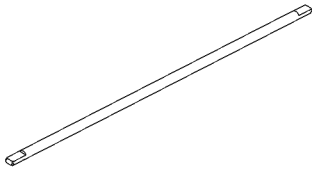

前后传动轴
Front and rear drive shafts

DZDJ01

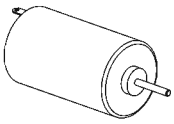

390电机
390 Motor

DZKG01

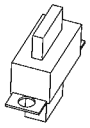

开关
Switch

DZDJ02

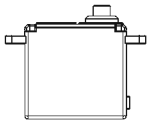

舵机
Rudder

S15060000

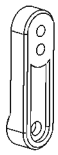

舵机摆臂
Rudder swing arm

DZDC01

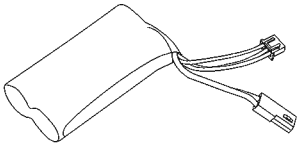

18650 电池
18650 battery

DZDB03

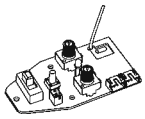

发射电子板
Blast-off electric plate

DZDB04

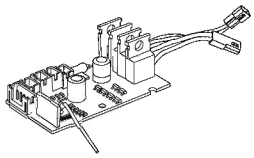

接收电子板
Incept electric plate

CJ0001

减震总成
Shock absorption assembly

CJ0016

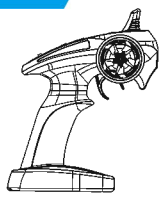

遥控器
Transmitter

CJ0007

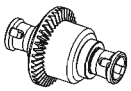

前差速组件
Components of the front differential case

CJ0008

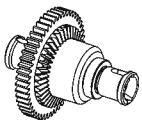

后差速组件
Components of the rear differential case

CJ0027

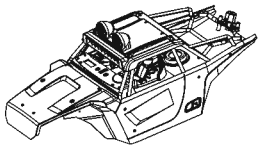

1513车壳组合件
1513 case components

CJ0028

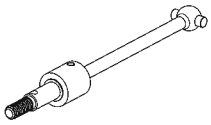

狗骨组合件
Multi–link independent suspension components

CJ0029

左轮胎组件
Left tire components

CJ0030

右轮胎组件
Right tire components

⚠ 警告(Warning)：

本产品含有小零件请勿让三岁以下儿童玩耍； 本品含电子元件，不得入水或在潮湿环境下使用；电池充电器应定期检查其电线、 插头、外壳和其他部件是否损坏，发现损坏时应停止使用。

Choking hazard! This product contains small parts. NOT suitable for children under 3 years. Contains electrical components and should be kept dry at all times. Regularly check the battery charger wires, plugs and shell and other components for damage. DO NOT use if any part is damaged.

注 意 事 项 (Caution proceeding)

1.可拆卸的小零件要放好，千万不可让小孩吞食。
2.如操作场地有电波干扰，请另选场地操作。
3.遥控器电源低电时，请立即停止操作。
4.对拆除后的包装物，请不要随地丢弃，以免污染环境卫生。
5.请将您的遥控模型存放在干燥,阴凉的地方。
6.不要置于近火和高温、潮湿的地方储存。
7.当电池被水浸湿，请将水分充分地擦拭干净，如有变形，请停止使用。

1. Detachable small parts should be stored safely and out of reach of children.
2. If interference is experienced, turn the model off and try it again in a different area.
3. Remote control will not function correctly if the batteries are low. Please replace the batteries.
4. Please discard old/used batteries in a safe manner. Consider your environment!
5. Please store the remote control in cool, dry place.
6. DO NOT expose to fire or high temperatures, moist storage.
7. Should the battery get wet, wipe immediately with a soft dry cloth.
   If transformed, please stop usage.

电池使用注意事项(Battery use caution proceeding)

1、车体使用一组 Li–Po 7.4V 可充电电池组；
2、遥控器使用3节1.5V “AA” 号电池；
3、安装或更换电池时请注意极性；
4、充电电池只能在成人监护下充电；
5、不可混用新旧或不同型号的电池；
6、电池电量用尽后，应从模型内取出；
7、接线端不应短路；
8、非充电电池不可充电；
9、充电电池充电前应从模型中取出；
10、请不要将坏的电池、电池组分解或扔到火中、水里，以免发生意外；
11、充电器的额定输入电压必须与当地的家用电压相符；
12、在充电过程中，充电器和电池出现微温，属于正常现象。

1. Bodywork uses a set of Li–Po 7.4V rechargeable batteries.
2. Remote control uses 3 x 1.5V ‘AA’ batteries.
3. Please pay attention to correct polarity when replacing batteries.
4. Rechargeable batteries should be charged under adult supervision.
5. DO NOT use a mix of old and new or different types of battery.
6. After the battery is exhausted , the model should be removed.
7. DO NOT short circuit any terminals.
8. DO NOT attempt to recharge non rechargeable batteries.
9. Remove batteries from the model when recharging.
10. DO NOT put batteries into a fire or into water.
11. The rated input voltage battery charger MUST be suitable for your mains power voltage.
12. During charging it is quite normal for the charger and batteries to heat up.

FCC Statement

This equipment has been tested and found to comply with the limits for a Class B digital device, pursuant to part 15 of the FCC Rules. These limits are designed to provide reasonable protection against harmful interference in a residential installation. This equipment generates, uses and can radiate radio frequency energy and, if not installed and used in accordance with the instructions, may cause harmful interference to radio communications. However, there is no guarantee that interference will not occur in a particular installation. If this equipment does cause harmful interference to radio or television reception, which can be determined by turning the equipment off and on, the user is encouraged to try to correct the interference by one or more of the following measures:

•Reorient or relocate the receiving antenna.

•Increase the separation between the equipment and receiver.

•Connect the equipment into an outlet on a circuit different from that to which the receiver is connected.

•Consult the dealer or an experienced radio/TV technician for help.

Caution: Any changes or modifications to this device not explicitly approved by manufacturer could void your authority to operate this equipment.

This device complies with part 15 of the FCC Rules. Operation is subject to the following two conditions: (1) This device may not cause harmful interference, and (2) this device must accept any interference received, including interference that may cause undesired operation.

RF Exposure Information

The device has been evaluated to meet general RF exposure requirement. The device can be used in portable exposure condition without restriction.

产品仅适合14岁以上儿童使用
(Not suitable for children under 14 years old)
操作前请详阅此说明书
(Please read through this manual before use)

SUBOTECH®

NO.BG1513

1:12 HIGH SPEED DERSERT BUGGY

2.4GHz REMOTE CONTROL SYSTEM OF ELECTRIC CARS

(使用说明书)

(Instruction manual)

Whole Metal Bearings

Metal Gear Differential

Metal Transmission Component

Function: Forward / Reverse / Turn Left / Turn Right