# PROFESSIONAL MOBILE RADIO TM8118 USER'S MANUAL

1. Users safety information .....1

2. Unpacking and inspection equipment.....1

3. Product introduction.....2

4. Working Mode & Menu.....8

1.1 RF functions.....5

1.2 CTCSS/DCS.....8

1.3 settings.....9

5. Shortcut Operation.....13

6. Specification.....15

General.....15

Receiving.....16

Transmitting.....16

# 1. Users safety information

**Users Safety Information**

- Do not attempt to configure your transceiver while driving.
- This transceiver is designed for a 13.8V DC power supply. Do not use a 24V battery to power on the transceiver.
- Please keep it away from interferential devices (Such as TV s, generators, etc.)
- Do not expose the transceiver to long periods of direct sunlight or place it close to heating appliances.
- If an abnormal odour or smoke is detected coming from the transceiver, turn off the power immediately and contact your dealer.
- Do not transmit with high power for extended periods or the transceiver may overheat.

# 2. Unpacking and inspect equipment....

Welcome to use the mobile radio, before use, please note:

①Please check the packaging of this radio to see whether it have any damage.

②Please open the box carefully to see whether the below item is on the box.

③If you find the radio and its accessories is lost or damaged, please kindly contact our dealer immediately.

Standard accessories

Radio

Microphone

bracket

Power cable

Others

# 3. Product introduction

Panel description

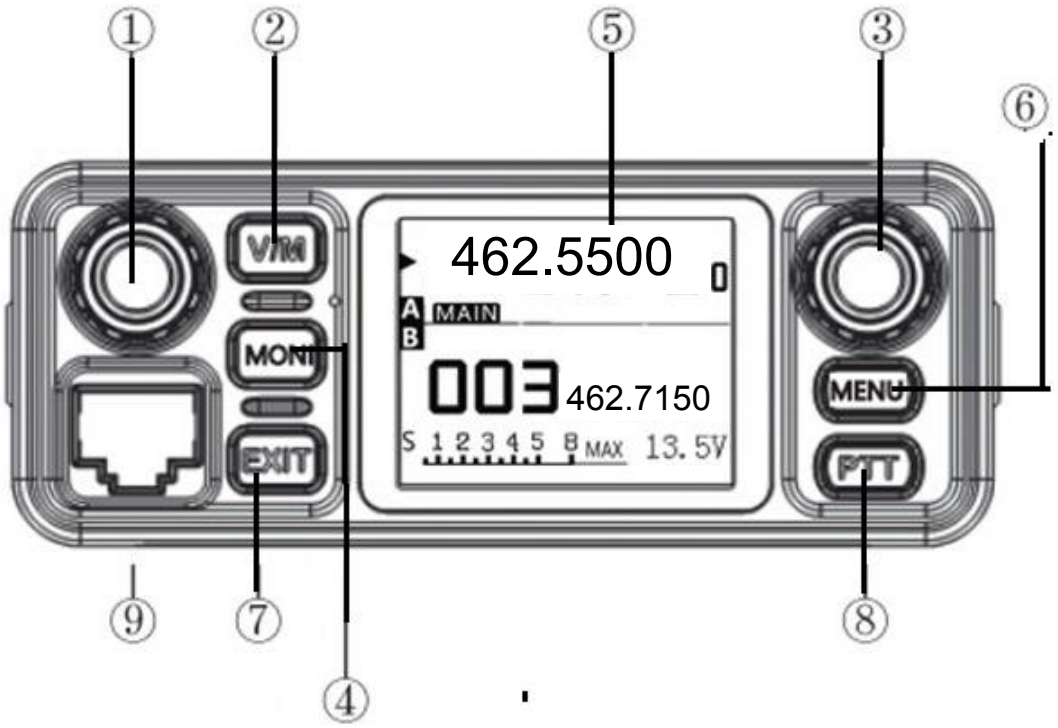


① power on/off, Volume knob

② V/M ,Switch frequency model ( only working on VFO mode)

③ Channel +- and enter

④ FM

⑤ Display screen

⑥ Menu

⑦ Exit/ back

⑧ PTT

⑨ Microphone connector

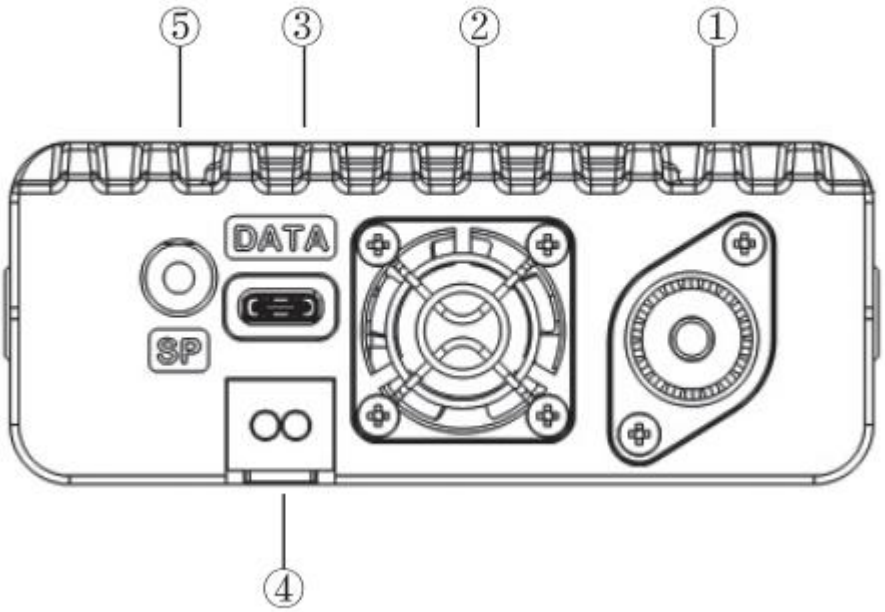


① Antenna

② Fan

③ Program port

④ DC port

⑤ External speaker port

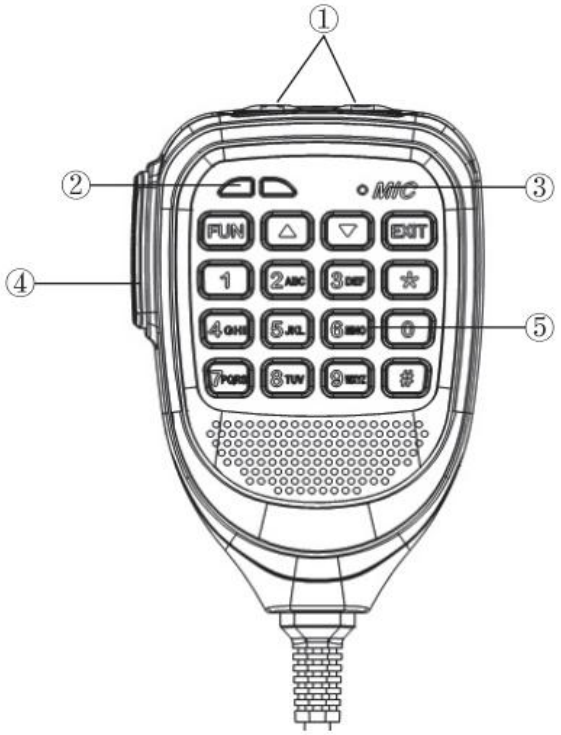


① Main//Sub channel switch

② TX/RX indicator

When received signal, will be green light

When transmit, will be red light

③ Microphone

④ Speaker

⑤ Keypad

# Basic Operation

1) Switch the power on/off

Press the power on /off for 1S to power on radio, press the key for 2S to power off radio

2) Adjust the Volume

Turn the Volume knob clockwise to increase the audio level , counterclockwise to decrease.

3) Receiving

When the channel you are operating is called, the screen shows RX and field intensity, in this way, you can hear the calling from transmitting party.

4) Transmitting

Press the PTT key, hold the microphone appropriately 2.5-5 cm from your lips, and then speaker into the microphone in your normal speaking voice to get best timbre.

Press and hold PTT key, LED light red and power intensity showed in screen indicated, that is mean it is transmitting, release to receive.

6. Shortcut Operation

| key | Short press | Long press | Menu+ key |
|---|---|---|---|
| Vol knob | / | Power on/off | / |
| Channel knob | Enter menu | Enter menu | Enter menu |
| -EXIT | Exit or back to previous menu/delete the number when input the frequency or channel number | / | exit |
| -P/O⊤ | PTT | PTT | / |
| -MONI | monitor | monitor | monitor |
| -MENU | Menu/confirm | Menu/confirm | Menu/confirm |
| - A | Main channel to be A band | / | / |
| -B | Main channel | / | / |

| | | | |
|---|---|---|---|
| -FUN | Short key/menu | Menu/confirm | Menu/confirm |
| -EXIT | Exit or back to previous menu/delete the number when input the frequency or channel number | / | exit |
| Mic-up | +/- | Repeat operation | / |
| Mic -down | +/- | Repeat operation | / |
| MIC-0 | Input the desired frequency , channel and number | / | Channel storage |
| MIC-1 | | / | SQL |
| MIC-2 | | / | POW |
| MIC-3 | | / | Dual watch |
| Mic-4 | | / | Set QT/QDT |
| Mic-5 | | / | Ser RX |

| | | | |
|---|---|---|---|
| | | | QT/DQT |
| Mic-6 | | / | Set TX QT/DQT |
| Mic-7 | | / | FM |
| Mic-8 | | / | Shift |
| Mic-9 | | / | scan |
| MIC-* | Favorite channel | / | / |
| MIC-# | / | Keypad lock / unlock | / |
| | | | |

# 4. Working Mode & Menu

**1) RF function**

Squelch mode

This function can set the signal strength. When the received signal reached the certain level, the users can hear the calling, or the radio will not been activated.

Operation: short press the channel knob or Menu key to enter the menu , using the channel knob or ↑ ↓ key to choose the 1st menu to enter the 1.1 SQL menu

Use the channel knob to choose the desired setting ( level 5 is

default setting)

0-9 level to adjust, level 0 is lowest level

Press confirm key to exit

Note: OVER high SQL level will cause the radio cannot received the weak signal, OVER low SQL will cause the radio been impact easily

Power level

You can select the TX power according to your talking environment and need. When we store memories, you can store High and low power setting separately short press the channel knob or Menu key to enter the menu , using the channel knob or ↑ ↓ key to choose the desired power, press confirm key and exit

Compandor

Enter the menu, to choose the compandor setting, short press the menu key to enter and then choose the desired setting, using the channel knob to choose on/ off, press confirm key and exit

Scrambler

Enter the menu , to choose the scrambler setting , short press the menu key to enter and then choose the desired setting, ( it will be blue)using the channel knob to choose on/ off,press confirm key and exit

Available value: it can be set to be scrambler

1S/2S/3S/4S/5S/6S/7S/8S/OFF

Busy channel lock

The BCLO feature prevents the radio's transmitter from being activated if a signal strong enough to break through the noise squelch is present. On a frequency where stations using different CTCSS or DCS codes may be active. BCLO prevents you from disrupting their communication accidentally (because your radio maybe muted by its own tone decoder).Enter the menu , to choose the BCLO setting , short press the menu key to enter and then choose the desired setting, ( it will be blue)using the channel knob to choose off/ CAT/DQT ,press confirm key and exit.

Available value: OFF/ DQT/ CAT

TOT

The TOT feather provides a safety switch which limits transmission to a pre-programmed value, This will promote battery conservation by not allowing you to make excessively-long transmissions, and in the event of a stuck PTT switch it can prevent interference to other users as well as battery depletion

Enter the menu , to choose the TOT setting , short press the menu key to enter and then choose the desired setting, using the channel knob to choose items ,press confirm key and exit

Available values:30S /60S /90S /120S /150S /180S /210S /240S /270S

TOA

short press the channel knob or Menu key to enter the menu , using the channel knob or ↑ ↓ key to choose the desired one ,( it will be blue) press confirm key and exit

Available values: OFF/1S/2S/3S/4S/5S/6S/7S/8S/9S/10S

SFT-D

Repeater stations , usually located on mountain tops or other high location, provide a dramatic extension of the communication range for low- powered hand-held or mobile transceivers,

Under VFO mode, you can set the magnitude and direction of the SFT-D.Enter the menu , to choose the SFT-D setting , short press the menu key to enter and then choose the desired setting, using the channel knob to choose +/- ,press confirm key and exit

+: means forwarder offset , which TX frequency will higher than RX frequency

-: means opposite offset, which TX frequency will lower than RX frequency

Offset: UHF has 0-70.125M available, VHF has 0-38M available

SFT frequency

short press the channel knob or Menu key to enter the menu , using the channel knob or ↑ ↓ key to choose the desired one ,( it will be blue) press confirm key and exit

UHF:0-70.0MHz available

VHF:0-38.0MHz available

TX frequency

Enter the menu, to choose the TX frequency setting, short press the menu key to enter and then choose the desired setting, using the channel knob to choose Desired frequency ,press confirm key and exit

Step

Enter the menu , to choose the STEP setting , short press the menu key to enter and then choose the desired setting, using the channel knob to choose Desired item ,press confirm key and exit

Available values:2.5k/5k/6.25k/10k/12.5k/20k/25k/30k

**2) CTCSS/DCS**

Enter the menu , to choose the CTCSS/DCS setting , short press the menu key to enter and then choose the desired setting, using the channel knob to choose Desired item ,press confirm key and exit

C-CTC/DCS

Available value:OFF/IDCS/DCS/CTCSS

R-CTC/DCS

Available value:OFF/IDCS/DCS/CTCSS

T-CTC/DCS

Available value:OFF/IDCS/DCS/CTCSS

SPECIAL DCS

Available value:OFF/SPECIAL DCS 1/2/3

**3) SETTING**

**Work mode**

Enter the menu , to choose the working mode setting , short press the menu key to enter and then choose the desired setting, using the channel knob to choose Desired item ,press confirm key and exit

Available values:frequency mode/ MR/CH

**ROG BEEP**

Enter the menu , to choose the ROG BEEP setting , short press

the menu key to enter and then choose the desired setting, using the channel knob to choose Desired item ,press confirm key and exit

Available values： off/1/2/3

**HOME channel**

Enter the menu , to choose the HOME channel setting , short press the menu key to enter and then choose the desired setting, using the channel knob to choose Desired item ,press confirm key and exit

Available values： 1-47

**A/B channel switch**

Enter the menu , to choose the A/B channel setting , short press the menu key to enter and then choose the desired setting, using the channel knob to choose Desired item ,press confirm key and exit

Available values： on/off/auto

AUTO: when channel A/B received the signal , it will switch to the channel automatically , it no any operation within 5s , it will switch to the begin channel

Off: the TX will be the current channel

On: the TX will be the channel with signal , can transmit directly

**Double watch**

Double watch function makes your radio can monitor the calling signal when FM radio is on and you won't miss any calling.

Enter the menu , to choose the double watch setting , short press the menu key to enter and then choose the desired setting, using the channel knob to choose Desired item ,press confirm key and exit

Available values： on/off（ on is the channel A and B dual watch , can be switch auto）

**VOX gain**

The VOX function provide automatic transmit or receive switching based on voice input to the microphone. With the VOX function on , you do not need to press PTT key , and it is not necessary to use a VOX headset in order to utilize VOX operation.

Enter the menu , to choose the VOX gain setting , short press the menu key to enter and then choose the desired setting, using the channel knob to choose Desired item ,press confirm key and exit

Available values：1-9( level 9 is most sensitivity one )

**VOX delay**

Enter the menu , to choose the VOX delay setting , short press

the menu key to enter and then choose the desired setting, using the channel knob to choose Desired item ,press confirm key and exit

Available values： 0.3s/0.5s/1s/1.5s/2.0s/3s

**Key tone**

Enter the menu , to choose the Key tone setting , short press the menu key to enter and then choose the desired setting, using the channel knob to choose Desired item ,press confirm key and exit

Available values： on/off

**Mic**

Enter the menu , to choose the mic setting , short press the menu key to enter and then choose the desired setting, using the channel knob to choose Desired item ,press confirm key and exit

Available values： in hand/device hose

**Delete noise function**

Enter the menu , to choose the Delete noise setting , short press the menu key to enter and then choose the desired setting, using the channel knob to choose Desired item ,press confirm key and exit

Available values: on/off

On: noise canceling on, can delete the background noise

**Keypad lock**

Enter the menu , to choose the Keypad lock setting, short press the menu key to enter and then choose the desired setting, using the channel knob to choose Desired item ,press confirm key and exit

Available values: manual/auto

**Lamp control**

Enter the menu , to choose the lamp control setting , short press the menu key to enter and then choose the desired setting, using the channel knob to choose Desired item ,press confirm key and exit

Available values： 5s/10s/15s/20s

**Language**

Enter the menu , to choose the Language setting , short press the menu key to enter and then choose the desired setting, using the channel knob to choose Desired item ,press confirm key and exit

Available values： Chinese/English

**APO**

Enter the menu, to choose the APO setting , short press the menu key to enter and then choose the desired setting, using the channel knob to choose Desired item ,press confirm key and exit

Available values: off/10 minutes/ 30minutes/ 1hours/ 2hours/ 3hours/ 4hours/ 5hours/ 6hours/ 7hours/ 8hours/ 9hours/ 10hours/ 11hours/ 12hours

**Factory reset**

Enter the menu , to choose the Factory resetsetting , short press the menu key to enter and then choose the desired setting, using the channel knob to choose Desired item ,press confirm key and exit

Available values: VFO/ all

**Scan RESUME**

Enter the menu , to choose the Scan RESUME setting , short press the menu key to enter and then choose the desired setting, using the channel knob to choose Desired item ,press confirm key and exit

Available values: carrier/ seek/ time

**Priority scan channel**

Enter the menu , to choose the Priority scan channel setting, short press the menu key to enter and then choose the desired setting, using the channel knob to choose Desired item ,press confirm key and exit

Enter the menu , to choose the Scan add setting , short press the menu key to enter and then choose the desired setting, using the channel knob to choose Desired item ,press confirm key and exit

Available value: add/delete

# 5. Specifications

| | |
|---|---|
| Frequency | 462.5500-462.7250MHz_main channels<br>462.5625-462.7125MHz_interstitial channels<br>467.5500-467.7250MHz_main channels |
| Maximum Conduct Output Power: | 462 MHz Main Channels: 44dBm<br>462 MHz interstitial channels: 33dBm<br>467 MHz Main Channels: 44dBm |
| modulation Type | FM |
| Operating Temperature | -30~+ 50℃ |
| Frequency stability: | ± 2.5ppm |
| Channel spacing | 25kHz |

**FCC Statement:**

Any Changes or modifications not expressly approved by the party responsible for compliance could void the user's authority to operate the equipment.

This device complies with part 15 of the FCC Rules. Operation is subject to the following two conditions:

(1) This device may not cause harmful interference, and

(2) This device must accept any interference received, including interference that may cause undesired operation.

Note:

This equipment has been tested and found to comply with the limits for a Class B digital device, pursuant to part 15 of the FCC Rules. These limits are designed to provide reasonable protection against harmful interference in a residential installation. This equipment generates, uses and can radiate radio frequency energy and, if not installed and used in accordance with the instructions, may cause harmful interference to radio communications. However, there is no guarantee that interference will not occur in a particular installation. If this equipment does cause harmful interference to r adio or television reception, which can be determined by turning the equipment off and on, the use r is encouraged to try to correct the interference by one or more of the following measures:

—Reorient or relocate the receiving antenna.

—Increase the separation between the equipment and receiver.

—Connect the equipment into an outlet on a circuit different from that to which the receiver is con nected.

—Consult the dealer or an experienced radio/TV technician for help.

Transmit no more than the rated duty factor of 50% of the time. To transmit (talk), push the Push-To-Talk (PTT) key. To receive calls, release the PTT key. Transmitting 50% of the time, or less, is important because the product generates measurable RF energy only when transmitting (in terms of measuring for standards compliance).

FCC Radiation Exposure Statement:

This equipment complies with FCC radiation exposure limits set forth for an uncontrolled environment .

This equipment should be installed and operated with minimum distance 100cm between the radiator& your body.